Catalogue No. RCC2020

RBL

CONVEYOR CHAINS

TRANSMISSION • CONVEYOR • LEAF • AGRICULTURAL • STAINLESS STEEL



PTDA

ringball corporation

Contents

Catalogue sections

Pages are numbered by section: a letter for the section followed by the page number within it (e.g. D12).
To look up a specific chain number, see the Part Number Index at the back of the catalogue (page PNI-1).

A	**Precision roller chains** ANSI A & B series, heavy duty, cottered, SP, SH & X3 high-performance roller chains	A1 – A18
B	**Special-purpose roller chains** Plated & corrosion resistant, self-lube, O-ring, oil field, escalator, anti-backbend & side bow chains	B1 – B24
C	**Heavy-duty, silent & automotive chains** Cranked-link, inverted tooth, P.I.V., motorcycle, engine timing, coupling, bush & straight side plate chains	C1 – C20
D	**Short pitch conveyor chains & attachments** Standard & special attachments (A & B series), extended pin chains	D1 – D53
E	**Double pitch conveyor chains** Double pitch chains, attachments, special attachments, extended pins & double plus chains	E1 – E36
F	**Conveyor chains with special rollers** Large, outboard, special and top roller conveyor chains	F1 – F9
G	**Lumber, sharp top & profile attachment chains** Lumber conveyor, sharp top, G & U type attachments, plastic attachments & plastic chains	G1 – G42
H	**Engineering conveyor chains** M, MT, MC, FV, FVT, FVC, Z, ZE & ZC series, non-standard hollow pin & attachment chains	H1 – H65
I	**Industrial conveyor chains I** Textile, grip, bottom plate, paper mill, metal decorating, top plate, hollow pin, fibreboard, spraying & elevator	I1 – I36
J	**Industrial conveyor chains II** Scraper, coal washer, bottle washer, rubber glove carrier, sewage, universal movement & engineering steel bush	J1 – J40
K	**Steel mill & heavy-duty chains** Steel mill, block, welded steel mill & drag chains, road construction machinery	K1 – K36
L	**Palm oil, sugar mill & automotive line chains** Palm oil, sugar mill and automobile production line conveyor chains	L1 – L32
M	**Leaf & hoisting chains** Leaf chains, hollow pin & sky stacker leaf chains, clevises, Gall's, car parking & hoisting chains	M1 – M30
N	**Agricultural chains** Cultivator, combine, rice harvester, S / A / CA type steel agricultural chains & attachments, pintle chains	N1 – N71
O	**Stainless steel chains** Stainless roller, conveyor, hollow pin, side bow & sharp top chains; food & beverage line chains	O1 – O30
P	**Technical data** Drive selection, power rating graphs, lubrication & maintenance	P1 – P10

Index

Product index by page

A Precision roller chains

Short pitch precision roller chains (A series) A1
Short pitch precision roller chains (B series) A5
Heavy duty series roller chains A8
Cottered type roller chains A12
SP series high strength roller chains A14
SH series high strength heavy duty chains A17
X3 series high performance roller chains A18

B Special-purpose roller chains

Other roller chains B1
Corrosion resistant / plated chains B5
Self-lubrication roller chains B8
O-Ring chains B10
Oil field chains B11
Escalator drive chains B13
Anti-backbend chains for pushing window B16
Side bow chains & attachments B20

C Heavy-duty, silent & automotive chains

Heavy duty cranked-link transmission chains C1
Inverted tooth (silent) chains C5
Self-tooth-forming chains (P.I.V.) C9
Motorcycle chains C10
O-Ring & X-Ring motorcycle chains C14
Timing bush chains for automobile engines C16
Coupling chains C17
Bush chains C18
Roller chains with straight side plates C19

D Short pitch conveyor chains & attachments

Short pitch conveyor chain attachments D1
Special attachments (A series) D25
Special attachments (B series) D38
Short pitch chains with extended pins D42
Chains with special extended pins D43

E Double pitch conveyor chains

Double pitch conveyor chains E1
Double pitch conveyor chain attachments E4
Double pitch chains with special attachments E22
Double pitch chains with extended pins E30
Double plus chains E36

F Conveyor chains with special rollers

Conveyor chains with large rollers F1
Conveyor chains with outboard rollers F4
Conveyor chains with special rollers F6
Short pitch chains with top rollers F8
Double pitch chains with top rollers F9

G Lumber, sharp top & profile attachment chains

Lumber conveyor chains & attachments G1
Sharp top chains G3
Roller chains with G type attachments G28
Roller chains with U type attachments G35
Roller chains with plastic attachments G38
Plastic chains G39
Conveyor chains with plastic rollers G42

H Engineering conveyor chains

Conveyor chains (M series) H1
M series chains with attachments H6
M series chains with extended pins H15
Conveyor chains (MT series) H16
Hollow pin conveyor chains (MC series) H17
Conveyor chains (FV series) H18
FV series chains with attachments H20
Conveyor chains (FVT series) H23
Hollow pin conveyor chains (FVC series) H24
Conveyor chains (Z series) H25
Z series chains with attachments H26
Conveyor chains (ZE series) H27
Hollow pin conveyor chains (ZC series) H28
Non-standard hollow pin conveyor chains H29
Conveyor chains H32
Conveyor chains with attachments H39

I Industrial conveyor chains I

Roller chains for textile machinery I1
Grip chains I2
Articulated bottom plate chains I4
Conveyor chains for paper mills I5
Chains for metal decorating systems I9
Top plate conveyor chains I17
Hollow pin conveyor chains I20
Chains for fibreboard equipment I28
Chains for spraying equipment I29
Conveyor chains for elevators I30

J Industrial conveyor chains II

Scraper conveyor chains J1
Conveyor chains for coal washers J14
Conveyor chains with attachments J19
Bottle washer conveyor chains J20
Rubber glove carrier chains J23
Sewage disposal chains J27
Universal movement conveyor chains J29
Engineering steel bush chains & attachments J37

K Steel mill & heavy-duty chains

Conveyor chains for steel mills **K1**
Block chains **K19**
Welded steel mill chains & attachments **K22**
Welded steel drag chains & attachments **K27**
Chains for road construction machinery **K30**

L Palm oil, sugar mill & automotive line chains

Palm oil chains **L1**
Sugar mill chains **L4**
Chains for automobile production lines **L22**

M Leaf & hoisting chains

Leaf chains **M1**
Hollow pin leaf chains **M15**
Leaf chains for sky stackers **M16**
Clevises for LH & LL series leaf chains **M18**
Clevis pins (LH & LL series) **M21**
Gall's chains **M25**
Car parking chains **M27**
Rollerless hoisting chains **M30**

N Agricultural chains

Rotary cultivator chains **N1**
Combine chains **N2**
ZGS38 combine chains with attachments **N5**
Rice harvester chains **N12**
S type steel agricultural chains **N21**
A type steel agricultural chains **N22**
CA type steel agricultural chains **N23**
S type chain attachments **N24**
C & CA type chain attachments **N34**
O-Ring agricultural chains **N60**
Special agricultural chains & attachments **N61**
Steel pintle chains **N66**
Steel pintle chain attachments **N69**

O Stainless steel chains

Stainless short pitch roller chains **O1**
Stainless chains with straight side plates **O4**
Stainless short pitch attachments **O7**
Stainless double pitch roller chains **O10**
Stainless double pitch attachments **O12**
Stainless hollow pin chains **O14**
Stainless short pitch chains, extended pins **O18**
Stainless double pitch chains, extended pins **O19**
Stainless conveyor chains (M series) **O20**
Stainless hollow pin chains (MC series) **O21**
Chains for cold drink production **O22**
Stainless side bow roller chains **O25**
Stainless anti-sidebow chains, pushing window **O26**
Chains for sausage production **O28**
Stainless sharp top chains **O30**

P Technical data

Selection of chain drive power **P1**
Power rating graphs (A & B series) **P2**
Selection of lubrication **P4**
Maintenance for roller chain drives **P9**

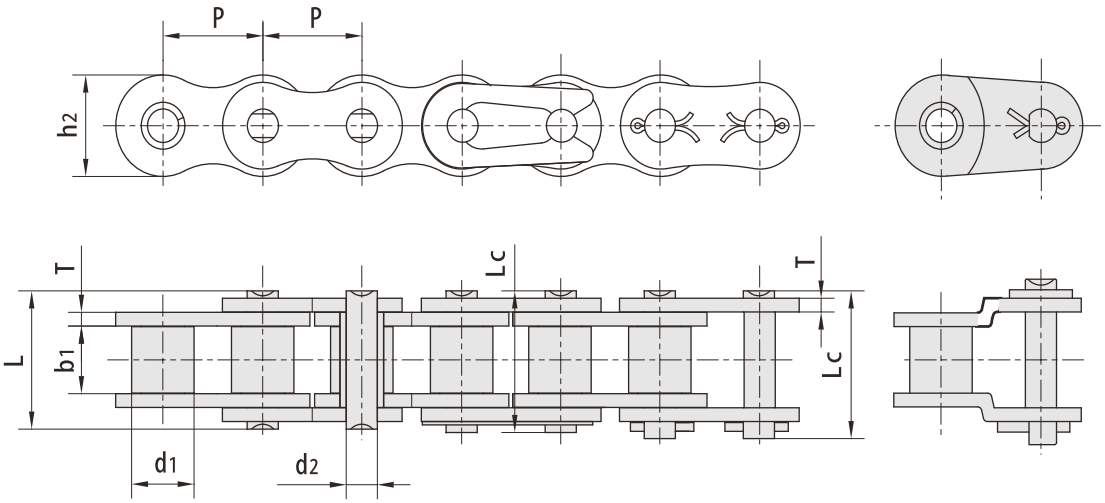

RBL ANSI chain number	Pitch P mm	Roller diameter d1 mm	Width between b1 mm	Pin diameter d2 mm	Pin length L max mm	Pin length Lc max mm	Inner plate h2 mm	Plate thickness T mm	Tensile strength Q min kN/lbf	Average Tensile kN	Weight kg/m
15	4.7625	2.48	2.38	1.62	6.10	6.90	4.30	0.60	1.80/409	2.0	0.08
*25	6.3500	3.30	3.18	2.31	7.90	8.40	6.00	0.80	3.50/795	5.0	0.15
*35	9.5250	5.08	4.77	3.58	12.40	13.17	9.00	1.30	7.90/1795	11.3	0.33
41	12.7000	7.77	6.25	3.58	13.75	15.00	9.91	1.30	6.67/1516	12.6	0.41
40	12.7000	7.95	7.85	3.96	16.60	17.80	12.00	1.50	14.10/3205	18.6	0.62
50	15.8750	10.16	9.40	5.08	20.70	22.20	15.09	2.03	22.20/5045	31.3	1.02
60	19.0500	11.91	12.57	5.94	25.9	27.70	18.00	2.42	31.80/7227	43.2	1.50
80	25.4000	15.88	15.75	7.92	32.70	35.00	24.00	3.25	56.70/l2886	74.3	2.60
100	31.7500	19.05	18.90	9.53	40.40	44.70	30.00	4.00	88.50/20114	107.6	3.91
120	38.1000	22.23	25.22	11.10	50.30	54.30	35.70	4.80	127.00/28864	163.1	5.62
140	44.4500	25.40	25.22	12.70	54.40	59.00	41.00	5.60	172.40/39182	222.5	7.50
160	50.8000	28.58	31.55	14.27	64.80	69.60	47.80	6.40	226.80/51545	266.9	10.10
180	57.1500	35.71	35.48	17.46	72.80	78.60	53.60	7.20	280.20/63682	361.1	13.45
200	63.5000	39.68	37.85	19.85	80.30	87.20	60.00	8.00	353.80/80409	466.8	16.15
240	76.2000	47.63	47.35	23.81	95.50	103.00	72.39	9.50	510.30/115977	671.6	23.20

* bush chain: d1 in the table indicaties the external diameter of the bush.

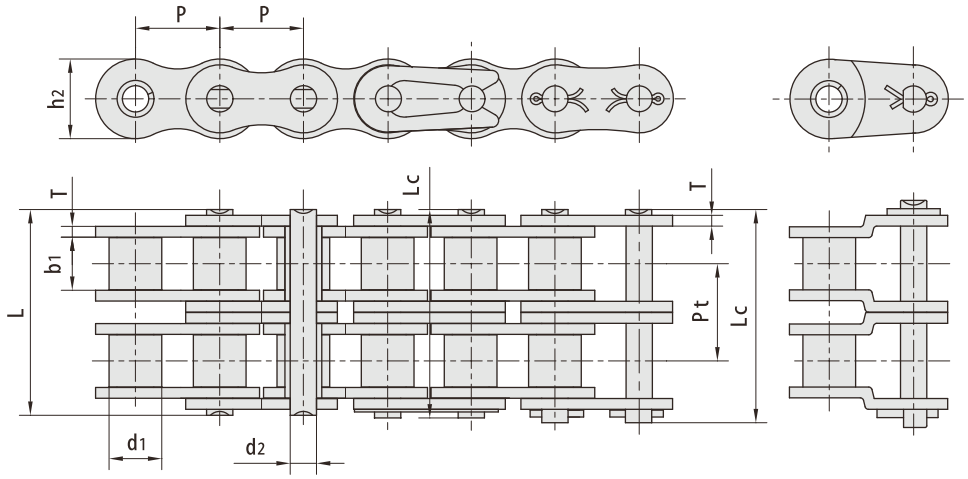

RBL ANSI chain number	Pitch P mm	Roller diameter d1 mm	Width between inner plates b1 mm	Pin diameter d2 mm	Pin length L max mm	Pin length Lc max mm	Inner plate depth h2 mm	Plate thickness T mm	Transverse pitch mm	Tensile strength Q min kN/lbf	Average Tensile strength kN	Weight kg/m
*25-2	6.350	3.30	3.18	2.31	14.5	15.0	6.00	0.80	6.40	7.00/1591	10.0	0.28
*35-2	9.525	5.08	4.77	3.58	22.5	23.3	9.00	1.30	10.13	15.80/3591	22.3	0.63
41-2	12.700	7.77	6.25	3.58	25.7	26.9	9.91	1.30	11.95	13.34/3032	16.9	0.81
40-2	12.700	7.95	7.85	3.96	31	32.2	12.00	1.50	14.38	28.20/6409	37.2	1.12
50-2	15.875	10.16	9.40	5.08	38.9	40.4	15.09	2.03	18.11	44.40/10091	62.6	2.00
60-2	19.050	11.91	12.57	5.94	48.8	50.5	18.00	2.42	22.78	63.60/14455	86.4	2.92
80-2	25.400	15.88	15.75	7.92	62.7	64.3	24.00	3.25	29.29	113.40/25773	148.6	5.15
100-2	31.750	19.05	18.90	9.53	76.4	80.5	30.00	4.00	35.76	177.00/40227	215.2	7.80
120-2	38.100	22.23	25.22	11.10	95.8	99.7	35.70	4.80	45.44	254.00/57727	326.2	11.70
140-2	44.450	25.40	25.22	12.70	103.3	107.9	41.00	5.60	48.87	344.80/78364	445.0	15.14
160-2	50.800	28.58	31.55	14.27	123.3	128.1	47.80	6.40	58.55	453.60/103091	533.8	20.14
180-2	57.150	35.71	35.48	17.46	138.6	144.4	53.60	7.20	65.84	560.50/127386	722.2	29.22
200-2	63.500	39.68	37.85	19.85	151.9	158.8	60.00	8.00	71.55	707.60/160818	933.6	32.24
240-2	76.200	47.63	47.35	23.81	183.4	190.8	72.39	9.50	87.83	1020.60/213955	1343.2	45.23

* bush chain: d1 in the table indicaties the external diameter of the bush.

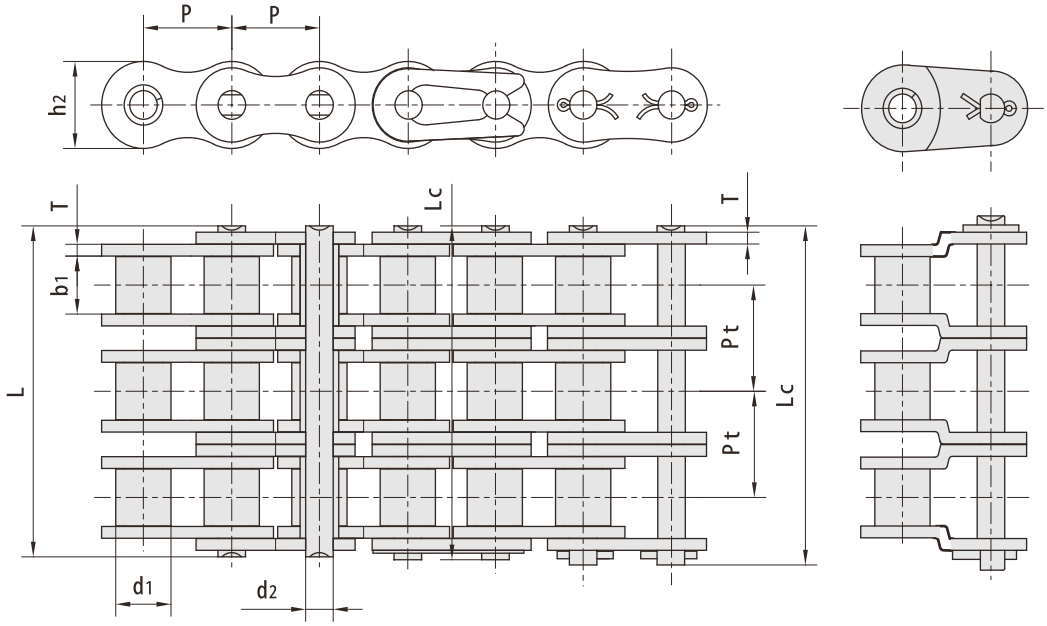

RBL ANSI chain number	Pitch P mm	Roller diameter d1 mm	Width between inner plates b1 mm	Pin diameter d2 mm	Pin length L max mm	Pin length Lc max mm	Inner plate depth h2 mm	Plate thickness T mm	Transverse pitch mm	Tensile strength Q min kN/lbf	Average Tensile strength kN	Weight kg/m
*25-3	6.350	3.30	3.18	2.31	21.0	21.5	6.00	0.80	6.40	10.5/2386	15.0	0.44
*35-3	9.525	5.08	4.77	3.58	32.7	33.5	9.00	1.30	10.13	23.7/5386	33.9	1.05
40-3	12.700	7.95	7.85	3.96	45.4	46.6	12.00	1.50	14.38	42.3/9614	55.8	1.90
50-3	15.875	10.16	9.40	5.08	57.0	58.5	15.09	2.03	18.11	66.6/15136	93.9	3.09
60-3	19.050	11.91	12.57	5.94	71.5	73.3	18.00	2.42	22.78	95.4/21682	129.6	4.54
80-3	25.400	15.88	15.75	7.92	91.7	93.6	24.00	3.25	29.29	170.1/38659	222.9	7.89
100-3	31.750	19.05	18.90	9.53	112.2	116.3	30.00	4.00	35.76	265.5/60341	322.8	11.77
120-3	38.100	22.23	25.22	11.10	141.4	145.2	35.70	4.80	45.44	381.0/86591	489.3	17.53
140-3	44.450	25.40	25.22	12.70	152.2	156.8	41.00	5.60	48.87	517.2/117545	667.5	22.20
160-3	50.800	28.58	31.55	14.27	181.8	186.6	47.80	6.40	58.55	680.4/154636	800.7	30.02
180-3	57.150	35.71	35.48	17.46	204.4	210.2	53.60	7.20	65.84	840.7/191068	1083.3	38.22
200-3	63.500	39.68	37.85	19.85	223.5	230.4	60.00	8.00	71.55	1061.4/241227	1400.4	49.03
240-3	76.200	47.63	47.35	23.81	271.3	278.6	72.39	9.50	87.83	1530.9/347932	2014.8	71.60

* bush chain: d1 in the table indicaties the external diameter of the bush.

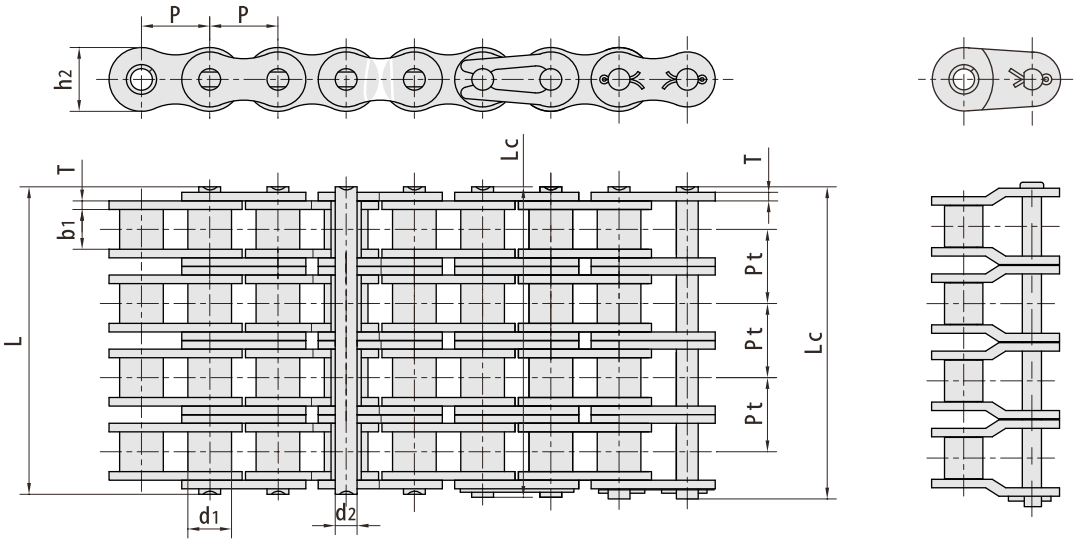

RBL ANSI chain number	Pitch P mm	Roller diameter d1 mm	Width between inner plates b1 mm	Pin diameter d2 mm	Pin length L max mm	Pin length Lc max mm	Inner plate depth h2 mm	Plate thickness T mm	Transverse pitch mm	Tensile strength Q min kN/lbf	Average Tensile strength kN	Weight kg/m
60-4	19.050	11.91	12.57	5.94	94.4	96.1	18.00	2.42	22.78	127.2/28614	139.92	6.21
80-4	25.400	15.88	15.75	7.92	121.0	124.4	24.00	3.25	29.29	226.8/51020	249.48	10.37
100-4	31.750	19.05	18.90	9.53	147.8	152.1	30.00	4.00	35.76	354.0/79635	389.40	15.60
120-4	38.100	22.23	25.22	11.10	187.0	190.8	35.70	4.80	45.44	508.0/114278	558.80	23.56
40-5	12.700	7.95	7.85	3.96	74.2	75.4	12.00	1.50	14.38	70.5/15859	77.55	3.19
50-5	15.875	10.16	9.40	5.08	93.2	94.7	15.09	2.03	18.11	111.0/24970	122.10	5.37
60-5	19.050	11.91	12.57	5.94	117.0	118.8	18.00	2.42	22.78	159.0/35768	174.90	7.75
80-5	25.400	15.88	15.75	7.92	149.9	153.7	24.00	3.25	29.29	283.5/63775	311.85	12.96
100-5	31.750	19.05	18.90	9.53	183.6	187.9	30.00	4.00	35.76	442.5/99543	486.75	19.46
120-5	38.100	22.23	25.22	11.10	232.3	236.1	35.70	4.80	45.44	635.0/142848	698.50	29.40
40-6	12.700	7.95	7.85	3.96	88.5	89.8	12.00	1.50	14.38	84.6/19031	93.06	3.83
50-6	15.875	10.16	9.40	5.08	111.3	112.8	15.09	2.03	18.11	133.2/29964	146.52	6.43
60-6	19.050	11.91	12.57	5.94	139.8	141.8	18.00	2.42	22.78	190.8/42921	209.80	9.31
80-6	25.400	15.88	15.75	7.92	179.2	183.0	24.00	3.25	29.29	340.2/76530	374.22	15.50
100-6	31.750	19.05	18.90	9.53	219.4	223.7	30.00	4.00	35.76	531.0/119452	584.10	23.36
120-6	38.100	22.23	25.22	11.10	278.0	282.0	35.70	4.80	45.44	762.0/171417	838.20	35.30
40-8	12.700	7.95	7.85	3.96	117.3	118.5	12.00	1.50	14.38	112.8/25375	124.08	5.11
50-8	15.875	10.16	9.40	5.08	147.5	149.0	15.09	2.03	18.11	177.6/39952	195.36	8.59
60-8	19.050	11.91	12.57	5.94	185.8	187.6	18.00	2.42	22.78	254.4/57229	279.84	12.37
80-8	25.400	15.88	15.75	7.92	237.8	241.6	24.00	3.25	29.29	453.6/102040	498.96	20.67
100-8	31.750	19.05	18.90	9.53	290.8	295.1	30.00	4.00	35.76	708.0/159270	778.80	31.14
120-8	38.100	22.23	25.22	11.10	368.8	372.8	35.70	4.80	45.44	016.0/228557	1176.00	47.07

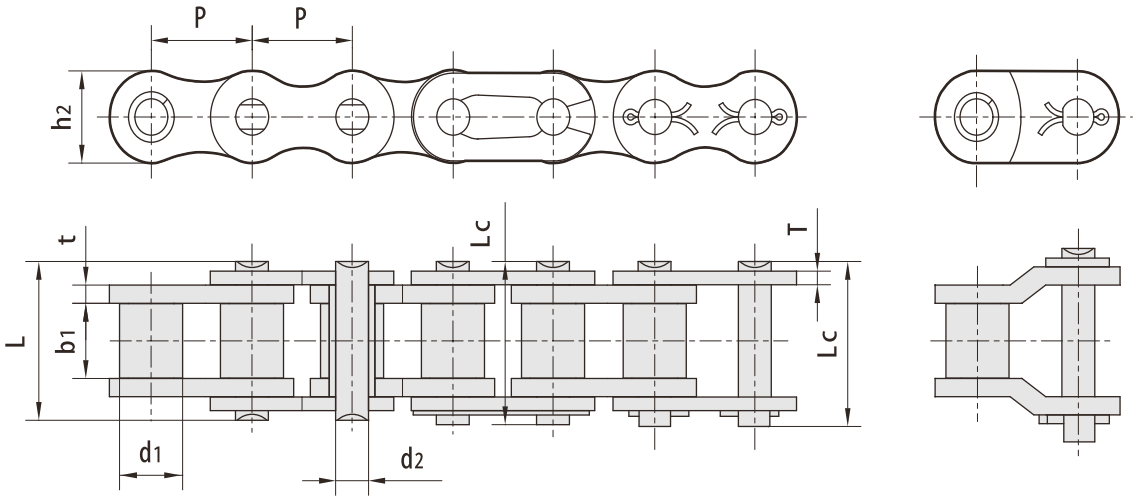

RBL chain number	Pitch	Roller diameter	Width between inner plates	Pin diameter	Pin length		Inner plate depth	Plate thickness	Tensile strength	Average Tensile strength	Weight
	P mm	d1 mm	b1 mm	d2 mm	L max mm	Lc max mm	h2 mm	T mm	Q min kN/lbf	kN	kg/m
04	6.000	4.00	2.80	1.85	6.80	7.8	5.00	0.60	3.0/682	3.2	0.11
05B-1	8.000	5.00	3.00	2.31	8.20	8.9	7.10	0.80	5.0/1136	5.9	0.20
*06B-1	9.525	6.35	5.72	3.28	13.15	14.1	8.20	1.30	9.0/2045	10.4	0.41
08B-1	12.700	8.51	7.75	4.45	16.70	18.2	11.80	1.60	18.0/4091	19.4	0.69
10B-1	15.875	10.16	9.65	5.08	19.50	20.9	14.70	1.70	22.4/5091	27.5	0.93
12B-1	19.050	12.07	11.68	5.72	22.50	24.2	16.00	1.85	29.0/6591	32.2	1.15
16B-1	25.400	15.88	17.02	8.28	36.10	37.4	21.00	4.15/3.1	60.0/l3636	77.1	2.71
20B-1	31.750	19.05	19.56	10.19	41.30	45.0	26.40	4.50/3.5	95.0/21591	112.8	3.70
24B-1	38.100	25.40	25.40	14.63	53.40	57.8	33.20	6.00/4.8	160.0/36364	178.0	7.10
28B-1	44.450	27.94	30.99	15.90	65.10	69.5	36.70	7.50/6.0	200.0/45455	236.4	8.50
32B-1	50.800	29.21	30.99	17.81	66.00	71.0	42.00	7.00/6.0	250.0/56818	277.5	10.25
40B-1	63.500	39.37	38.10	22.89	82.20	89.2	52.96	8.50/8.0	355.0/80682	394.0	16.35
48B-1	76.200	48.26	45.72	29.24	99.10	107.0	63.80	12.00/10.0	560.0/127272	621.6	25.00
56B-1	88.900	53.98	53.34	34.32	114.6	123.0	77.80	13.50/12.0	850.0/193180	940.0	35.78
64B-1	101.600	63.50	60.96	39.40	130.0	138.5	90.17	15.00/13.0	112.0/254544	1240.0	46.00
72B-1	114.300	72.39	68.58	44.48	147.4	156.4	103.60	17.00/15.0	1400.0/318180	1550.0	60.80

* Straight side plates

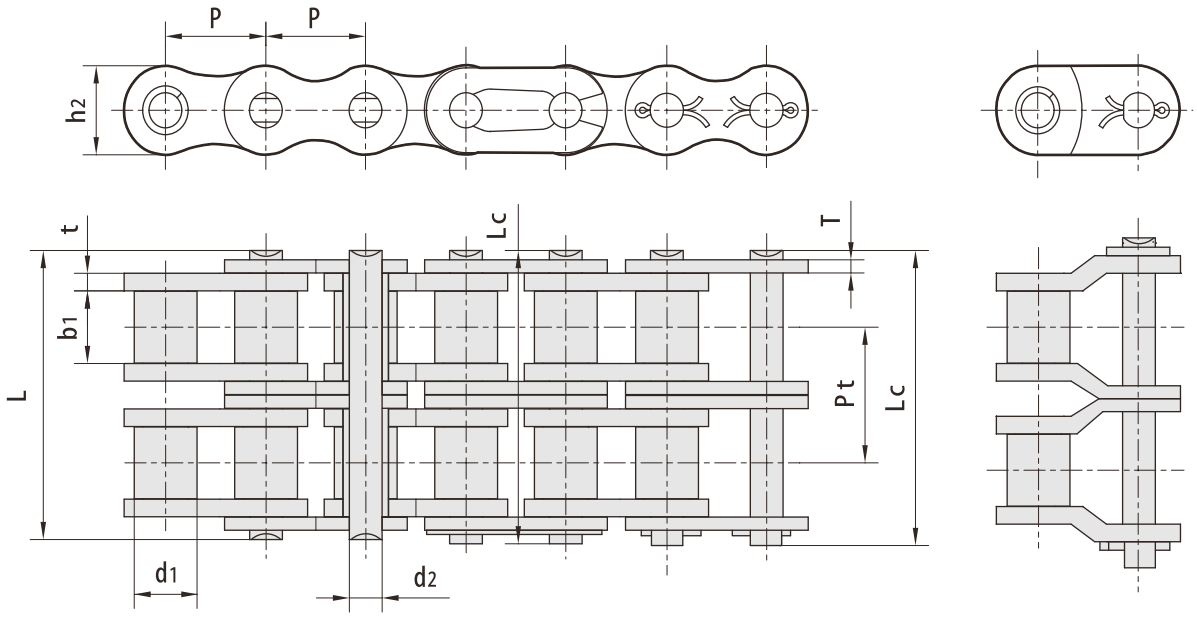

RBL chain number	Pitch P mm	Roller diameter d1 mm	Width between inner plates b1 mm	Pin diameter d2 mm	Pin length L max mm	Pin length Lc max mm	Inner plate depth h2 mm	Plate thickness T mm	Transverse pitch mm	Tensile strength Q min kN/lbf	Average Tensile strength kN	Weight kg/m
05B-2	8.000	5.00	3.00	2.31	13.9	14.5	7.10	0.80	5.64	7.8/1773	10.2	0.33
*06B-2	9.525	6.35	5.72	3.28	23.4	24.4	8.20	1.30	10.24	16.9/3841	18.7	0.77
08B-2	12.700	8.51	7.75	4.45	31.0	32.2	11.80	1.60	13.92	32.0/7273	38.7	1.34
10B-2	15.875	10.16	9.65	5.08	36.1	37.5	14.70	1.70	16.59	44.5/10114	56.2	1.84
12B-2	19.050	12.07	11.68	5.72	42.0	43.6	16.00	1.85	19.46	57.8/13136	66.1	2.31
16B-2	25.400	15.88	17.02	8.28	68.0	69.3	21.00	4.15/3.1	31.88	106.0/24091	152.1	5.42
20B-2	31.750	19.05	19.56	10.19	77.8	81.5	26.40	4.50/3.5	36.45	170.0/38636	229.0	7.20
24B-2	38.100	25.40	25.40	14.63	101.7	106.2	33.20	6.00/4.8	48.36	280.0/63636	319.2	13.40
28B-1	44.450	27.94	30.99	15.90	124.6	129.1	36.70	7.50/6.0	59.56	360.0/81818	406.8	16.60
32B-2	50.800	29.21	30.99	17.81	124.6	129.6	42.00	7.00/6.0	58.55	450.0/102273	508.5	21.00
40B-2	63.500	39.37	38.10	22.89	154.5	161.5	52.96	8.50/8.0	72.29	630.0/143182	711.9	32.00
48B-2	76.200	48.26	45.72	29.24	190.4	198.2	63.80	12.00/10.0	91.21	1000.0/227272	1130.0	50.00
56B-2	88.900	53.98	53.34	34.32	221.2	229.6	77.80	13.50/12.0	106.60	1600.0/363635	1760.0	71.48
64B-2	101.600	63.50	60.96	39.40	249.9	258.4	90.17	15.00/13.0	119.89	2000.0/454544	2200.0	91.00
72B-2	114.300	72.39	68.58	44.48	283.7	292.7	103.60	17.00/15.0	136.27	2500.0/568180	2750.0	120.40

* Straight side plates

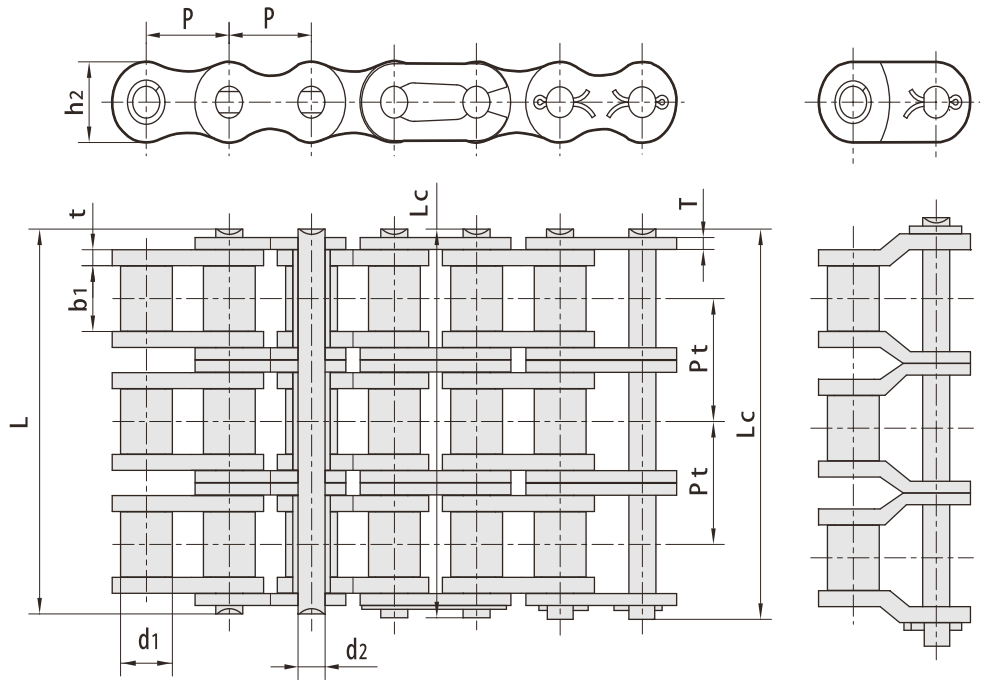

RBL chain number	Pitch	Roller diameter	Width between inner plates	Pin diameter	Pin length		Inner plate depth	Plate thickness	Transverse pitch	Tensile strength	Average Tensile strength	Weight
	P mm	d1 mm	b1 mm	d2 mm	L max mm	Lc max mm	h2 mm	T mm	mm	Q min kN/lbf	kN	kg/m
05B-3	8.000	5.00	3.00	2.31	19.5	20.2	7.10	0.80	5.64	11.1/2523	13.8	0.48
*06B-3	9.525	6.35	5.72	3.28	33.5	34.6	8.20	1.30	10.24	24.9/5659	30.1	1.16
08B-3	12.700	8.51	7.75	4.45	45.1	46.1	11.80	1.60	13.92	47.5/10795	57.8	2.03
10B-3	15.875	10.16	9.65	5.08	52.7	54.1	14.70	1.70	16.59	66.7/15159	84.5	2.77
12B-3	19.050	12.07	11.68	5.72	61.5	63.1	16.00	1.85	19.46	86.7/19705	101.8	3.46
16B-3	25.400	15.88	17.02	8.28	99.8	101.2	21.00	4.15/3.1	31.88	160.0/36364	227.1	8.13
20B-3	31.750	19.05	19.56	10.19	114.2	117.9	26.40	4.50/3.5	36.45	250.0/56818	334.3	10.82
24B-3	38.100	25.40	25.40	14.63	150.1	154.6	33.20	6.00/4.8	48.36	425.0/96591	493.0	20.10
28B-3	44.450	27.94	30.99	15.90	184.2	188.7	36.70	7.50/6.0	59.56	530.0/120454	609.5	24.92
32B-3	50.800	29.21	30.99	17.81	183.2	188.2	42.00	7.00/6.0	58.55	670.0/152273	770.5	31.56
40B-3	63.500	39.37	38.10	22.89	226.8	233.8	52.96	8.50/8.0	72.29	950.0/215909	1092.5	48.10
48B-3	76.200	48.26	45.72	29.24	281.6	289.4	63.80	12.00/10.0	91.21	1500.0/340909	1710.0	75.00
56B-3	88.900	53.98	53.34	34.32	327.8	336.2	77.80	13.50/12.0	106.6	2240.0/545450	2464.0	107.18
64B-3	101.60	63.50	60.96	39.40	369.8	378.3	90.17	15.00/13.0	119.89	3000.0/681820	3300.0	136.00
72B-3	114.30	72.39	68.58	44.48	420.0	429.0	103.60	17.00/15.0	136.27	3750.0/852270	4125.0	180.00

* Straight side plates

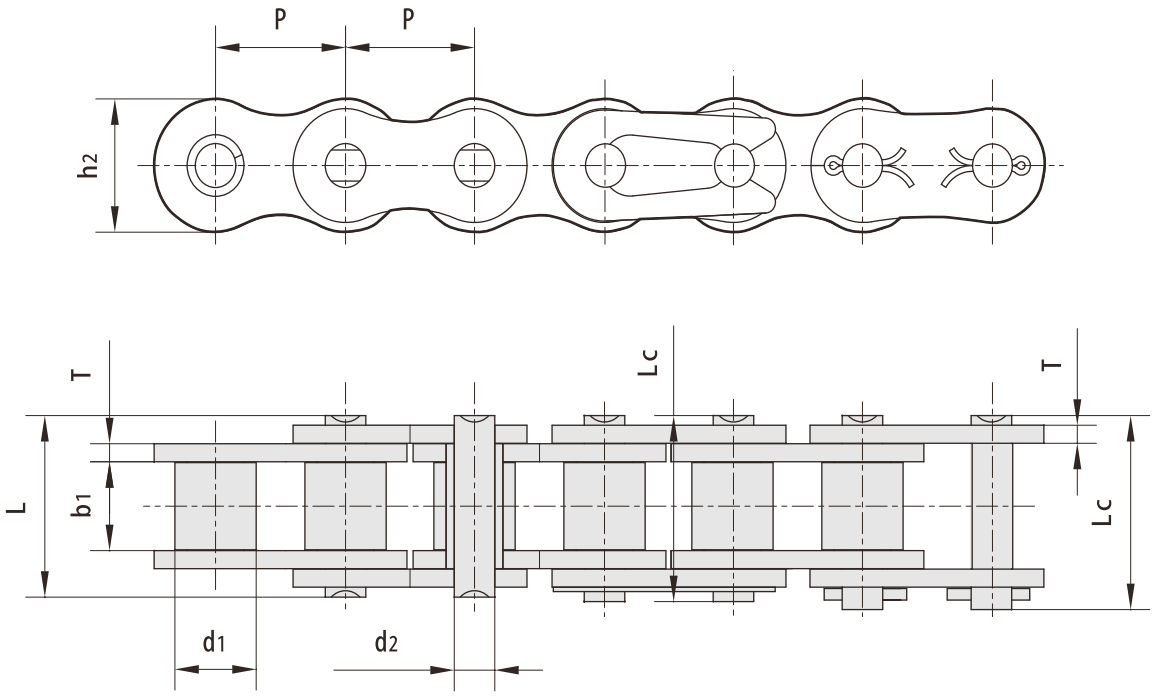

RBL ANSI chain number	Pitch	Roller diameter	Width between inner plates	Pin diameter	Pin length		Inner plate depth	Plate thickness	Tensile strength	Average Tensile strength	Weight
	P mm	d1 max mm	b1 min mm	d2 max mm	L max mm	Lc max mm	h2 max mm	T max mm	Q. min kN/bf	Qo kN	q kg/m
*35H-1	9.525	5.08	4.77	3.58	13.3	14.3	9.00	1.50	7.9/1795	10.8	0.41
40H-1	12.700	7.95	7.85	3.96	18.8	19.9	12.00	2.03	14.1/3205	19.1	0.82
50H-1	15.875	10.16	9.40	5.08	22.1	23.4	15.09	2.42	22.2/5045	30.2	1.25
60H-1	19.050	11.91	12.57	5.94	29.2	31.0	18.00	3.25	31.8/7227	42.7	1.87
80H-1	25.400	15.88	15.75	7.92	36.2	37.7	24.00	4.00	56.7/12886	71.4	3.10
100H-1	31.750	19.05	18.90	9.53	43.6	46.9	30.00	4.80	88.5/20114	112.4	4.52
120H-1	38.100	22.23	25.22	11.10	53.5	57.5	35.70	5.60	127.0/28864	160.9	6.60
140H-1	44.450	25.40	25.22	12.70	57.6	62.2	41.00	6.40	172.4/39182	217.3	8.30
160H-1	50.800	28.58	31.55	14.27	68.2	73.0	47.80	7.20	226.8/51545	285.8	10.30
180H-1	57.150	35.71	35.48	17.46	75.9	81.6	53.60	8.00	281.0/63863	341.8	14.83
200H-1	63.500	39.68	37.85	19.85	86.6	93.5	60.00	9.50	353.8/80409	444.5	19.16
240H-1	76.200	47.63	47.35	23.81	109.6	115.9	72.30	12.70	510.3/115977	622.5	30.40

* bush chain: d1 in the table indicaties the external diameter of the bush.

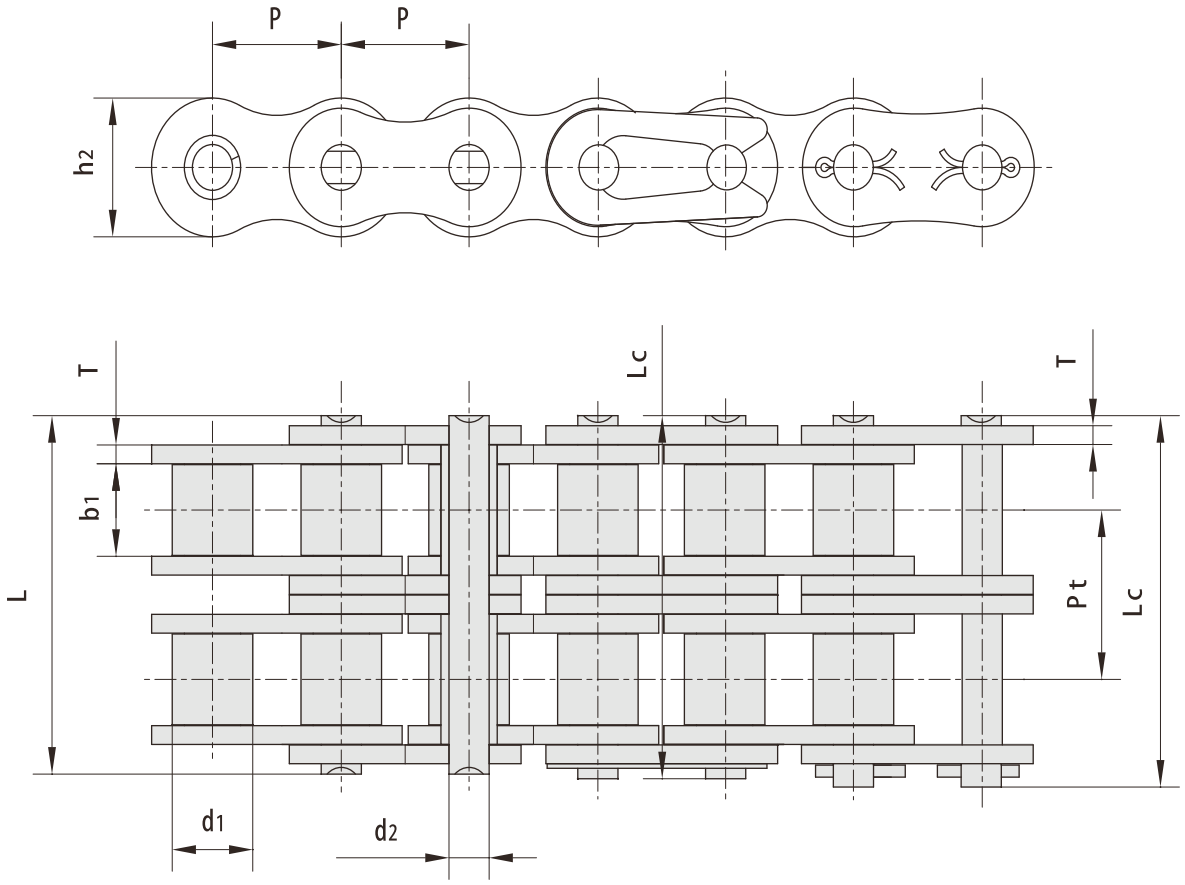

RBL ANSI chain number	Pitch P mm	Roller diameter d1 mm	Width between inner plates b1 mm	Pin diameter d2 mm	Pin length L max mm	Pin length Lc max mm	Inner plate depth h2 mm	Plate thickness T mm	Transverse pitch mm	Tensile strength Q min kN/lbf	Average Tensile strength kN	Weight kg/m
60H-2	19.050	11.91	12.57	5.94	55.3	57.1	18.00	3.25	26.11	63.6/14455	84.5	3.71
80H-2	25.400	15.88	15.75	7.92	68.8	70.3	24.00	4.00	32.59	113.4/25773	145.3	6.15
100H-2	31.750	19.05	18.90	9.53	82.7	86.0	30.00	4.80	39.09	177.0/40227	225.9	9.03
120H-2	38.100	22.23	25.22	11.10	102.4	106.4	35.70	5.60	48.87	254.0/57727	322.7	13.13
140H-2	44.450	25.40	25.22	12.70	109.8	114.4	41.00	6.40	52.20	344.8/78364	437.7	16.60
160H-2	50.800	28.58	31.55	14.27	130.1	134.9	47.80	7.20	61.90	453.6/103091	571.6	20.20
180H-2	57.150	35.71	35.48	17.46	146.5	155.6	53.60	8.00	69.16	562/127726	680.0	29.20
200H-2	63.500	39.68	37.85	19.85	164.9	171.8	60.00	9.50	78.31	707.6/160818	894.9	38.11
240H-2	76.200	47.63	47.35	23.81	212.6	223.1	72.30	12.70	101.22	1000/227270	1200.0	60.50

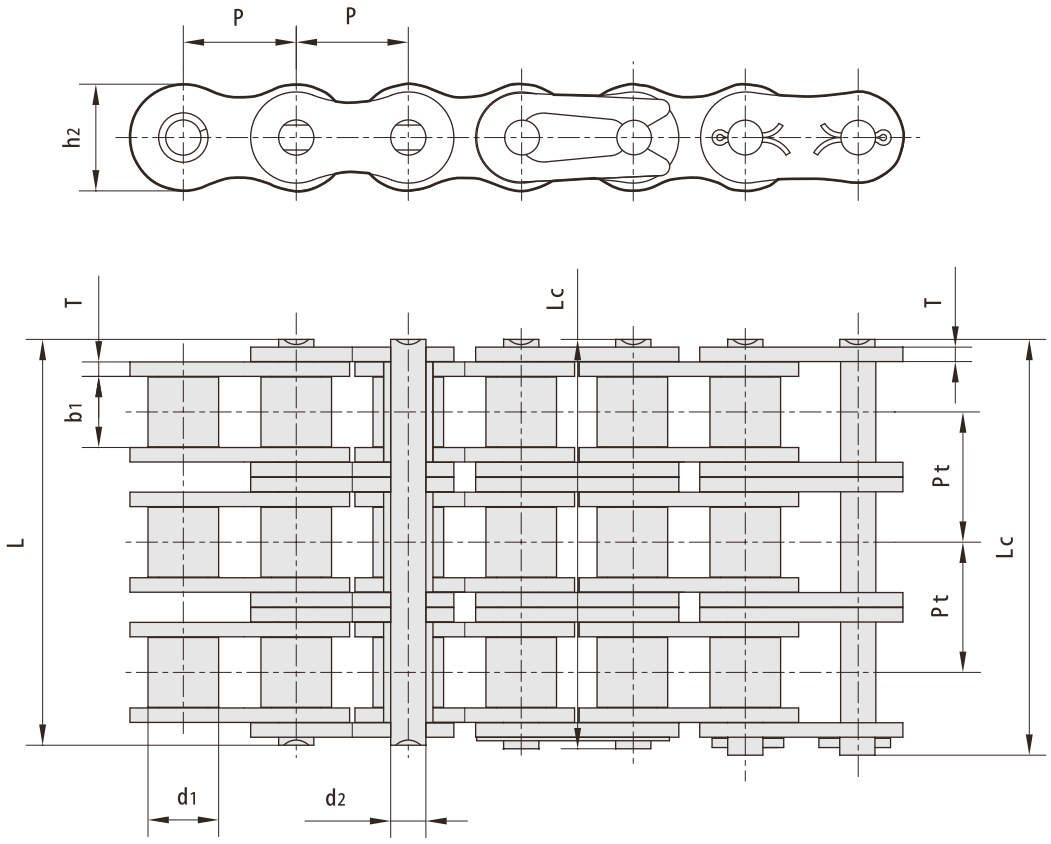

RBL ANSI chain number	Pitch P mm	Roller diameter d1 mm	Width between inner plates b1 mm	Pin diameter d2 mm	Pin length L max mm	Pin length Lc max mm	Inner plate depth h2 mm	Plate thickness T mm	Transverse pitch mm	Tensile strength Q min kN/lbf	Average Tensile strength kN	Weight kg/m
60H-3	19.050	11.91	12.57	5.94	81.4	83.2	18.00	3.25	26.11	95.4/21682	113.9	5.54
80H-3	25.400	15.88	15.75	7.92	101.4	102.9	24.00	4.00	32.59	170.1/38659	203.5	9.42
100H-3	31.750	19.05	18.90	9.53	121.8	125.1	30.00	4.80	39.09	265.5/60341	314.8	12.96
120H-3	38.100	22.23	25.22	11.10	151.2	155.2	35.70	5.60	48.87	381.0/86591	444.7	19.64
140H-3	44.450	25.40	25.22	12.70	162.0	166.6	41.00	6.40	52.20	517.2/117545	598.4	24.90
160H-3	50.800	28.58	31.55	14.27	192.0	196.8	47.80	7.20	61.90	680.4/154636	787.3	30.10
180H-3	57.150	35.71	35.48	17.46	215.7	224.8	53.60	8.00	69.16	843/191589	1011.0	44.10
200H-3	63.500	39.68	37.85	19.85	243.2	250.1	60.00	9.50	78.31	1061.4/241227	1228.2	57.06
240H-3	76.200	47.63	47.35	23.81	313.8	324.3	72.30	12.70	101.22	1500/340905	1650.0	91.00

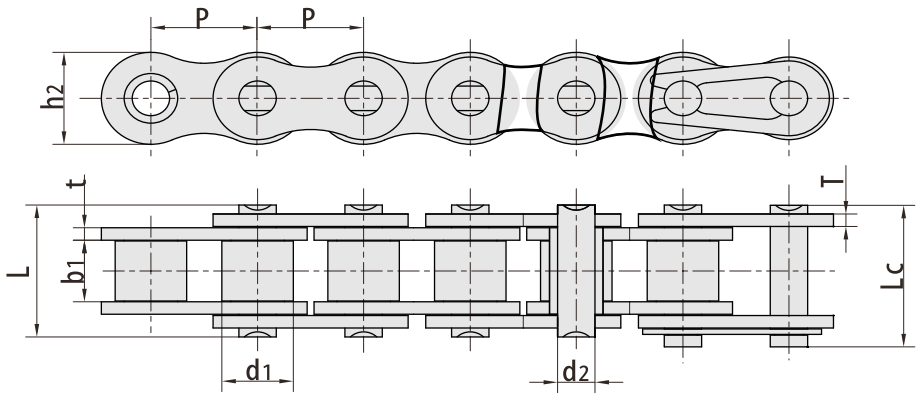

RBL chain number	Pitch	Roller diameter	Width between inner plates	Pin diameter	Pin length		Inner plate depth	Plate thickness	Tensile strength	Weight
	P mm	d1 mm	b1 mm	d2 mm	L max mm	Lc max mm	h2 mm	T mm	Q min kN/lbf	kg/m
04BH	6.000	4.00	2.80	1.85	8.4	9.4	5.0	0.90	5.00/1136	0.14
*06BH	9.525	6.35	5.72	3.58	14.4	15.4	8.2	1.60	11.25/2557	0.51
#35HF1	9.525	5.08	4.77	3.58	14.6	15.6	9.0	1.80	9.00/2023	0.47
08AHF1	12.700	7.95	10.00	3.96	21.0	22.2	12.0	2.03	13.80/3136	0.88
08BH	12.700	8.51	7.85	4.45	18.8	19.9	11.8	2.03	20.60/4682	0.79
41HF1	12.700	7.77	6.25	3.58	16.7	18.0	9.9	2.03	9.00/2023	0.59
*C40HF3	12.700	7.95	7.85	3.96	18.8	19.9	12.0	2.03	20.00/4496	0.94
*C08BHF8	12.700	8.51	7.85	4.45	19.9	21.0	11.8	2.42/2.03	25.00/5620	1.04
10BH	15.875	10.16	9.65	5.08	20.2	21.6	14.7	1.85	25.00/5681	1.03
10BHF1	15.875	10.16	6.45	5.08	18.0	19.8	14.7	2.10	23.60/5305	1.05
12BH	19.050	12.07	11.68	5.94	25.2	26.8	16.0	2.42	40.00/9091	1.45
12BHF1	19.050	12.07	11.68	6.10	25.0	27.2	16.5	2.50	44.00/10000	1.46
12BHF2	19.050	12.07	13.30	6.10	28.8	30.3	16.5	2.80	35.00/7954	1.72
12BHF3	19.050	12.07	13.50	5.72	28.8	30.3	16.5	2.80	35.00/7954	1.71
12BV	19.050	12.07	11.68	6.10	24.5	26.5	16.0	2.42	36.00/8182	1.43
60HV	19.050	11.91	12.57	5.94	29.2	31.0	18.0	3.25	40.00/9090	2.00
12AHF7	19.050	11.91	9.50	5.94	25.9	27.7	18.0	3.25	49.00/11015	1.78
12AHF101	19.050	11.91	9.40	5.94	26.3	28.1	18.0	3.25	53.00/11914	1.81
12BHF5	19.050	12.07	11.68	6.10	25.2	26.8	17.9	2.42	40.00/8992	1.60
*C12BHF3	19.050	12.07	11.68	5.72	29.3	31.2	20.0	4.0/3.0	31.40/7059	2.38
16BH	25.400	15.88	17.02	8.90	35.7	38.9	24.1	4.00/3.1	80.00/18182	3.11
16BHF3	25.400	15.88	12.70	8.90	31.6	35.0	24.1	4.00/3.1	80.00/18182	2.90
*C20AHF1	31.750	19.05	19.05	10.32	43.6	46.9	30.0	4.80	146.00/32821	5.40
20BH	31.750	19.05	19.56	10.19	47.1	51.0	26.4	6.0/4.8	95.00/21356	4.52
20BHF1	31.750	19.05	19.56	10.19	47.1	51.0	29.2	6.0/4.8	150.00/33720	5.09
24BH	38.100	25.40	25.40	14.63	58.6	63.4	36.2	7.50/6.0	225.00/51136	9.00
24BHF2	38.100	25.40	25.40	14.63	57.8	62.2	37.0	7.20/6.0	225.40/51226	9.06
24BHF5	38.100	25.40	25.40	14.63	64.6	69.1	36.2	9.00/7.5	270.00/61344	10.60
24BHF2	44.450	27.94	30.99	15.90	69.6	75.0	36.7	8.5/7.2	200.00/44960	9.99
32AHF1	50.800	28.58	31.55	15.00	75.4	80.3	47.8	9.00	222.40/49996	13.36
32BH	50.800	29.21	30.99	17.81	72.0	77.2	42.0	8.00	250.00/56200	11.26
32BHF1	50.800	29.21	31.55	17.81	69.9	74.7	48.2	8.0/7.15	350.00/78680	13.20

* Straight side plates

* bush chain: d1 in the table indicaties the external diameter of the bush.

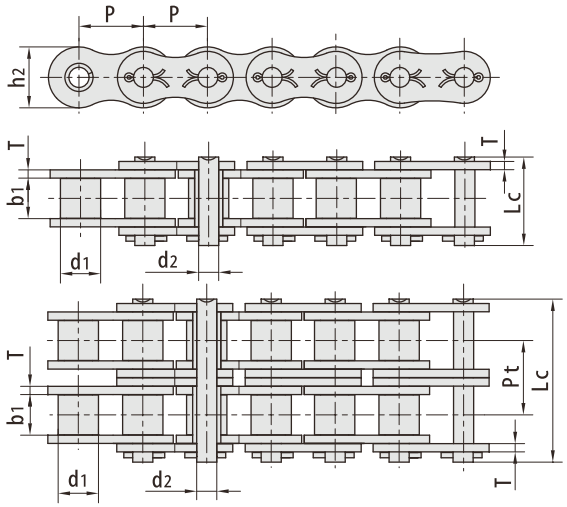

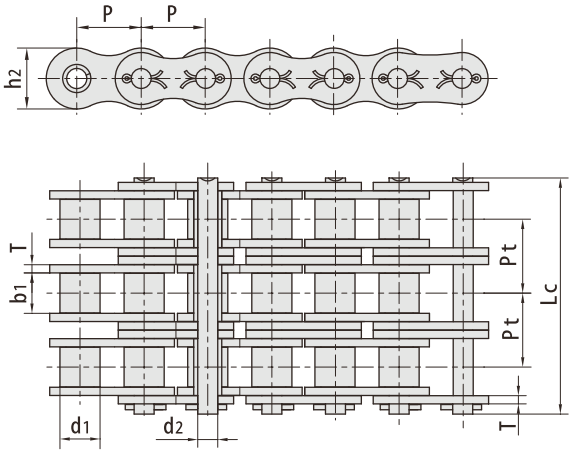

RBL ANSI chain number	Pitch P mm	Roller diameter d1 mm	Width between inner plates b1 mm	Pin diameter d2 mm	Pin length L max mm	Inner plate depth h2 mm	Plate thickness T mm	Transverse pitch mm	Tensile strength Q min kN/lbf	Average Tensile strength kN	Weight kg/m
50-1C	15.875	10.16	9.40	5.08	23.3	15.09	2.03	-	22.2/5045	29.4	1.02
60-1C	19.050	11.91	12.57	5.94	28.3	18.00	2.42	-	31.8/7227	41.5	1.50
80-1C	25.400	15.88	15.75	7.92	36.5	24.00	3.25	-	56.7/12886	69.4	2.60
100-1C	31.750	19.05	18.90	9.53	44.7	30.00	4.00	-	88.5/20114	109.2	3.91
120-1C	38.100	22.23	25.22	11.10	54.3	35.70	4.80	-	127.0/28864	156.3	5.62
140-1C	44.450	25.40	25.22	12.70	59.0	41.00	5.60	-	172.4/39182	212.0	7.50
160-1C	50.800	28.58	31.55	14.27	69.6	47.80	6.40	-	226.8/51545	278.9	10.10
180-1C	57.150	35.71	35.48	17.46	78.6	53.60	7.20	-	280.2/63682	341.8	13.45
200-1C	63.500	39.68	37.85	19.85	87.2	60.00	8.00	-	353.8/60409	431.6	16.15
240-1C	76.200	47.63	47.35	23.81	103.0	72.39	9.50	-	510.3/115977	622.5	23.20
50-2C	15.875	10.16	9.40	5.08	41.2	15.09	2.03	18.11	44.4/10091	58.1	2.00
60-2C	19.050	11.91	12.57	5.94	51.1	18.00	2.42	22.78	63.6/14455	82.1	2.92
80-2C	25.400	15.88	15.75	7.92	65.8	24.00	3.25	29.29	113.4/25773	141.8	5.15
100-2C	31.750	19.05	18.90	9.53	80.5	30.00	4.00	35.76	177.0/40227	219.4	7.80
120-2C	38.100	22.23	25.22	11.10	99.7	35.70	4.80	45.44	254.0/57727	314.9	11.70
140-2C	44.450	25.40	25.22	12.70	107.9	41.00	5.60	48.87	344.8/78364	427.5	15.14
160-2C	50.800	28.58	31.55	14.27	128.1	47.80	6.40	58.55	453.6/103091	562.4	20.14
180-2C	57.150	35.71	35.48	17.46	144.4	53.60	7.20	65.84	560.5/127386	695.0	29.22
200-2C	63.500	39.68	37.85	19.85	158.8	60.00	8.00	71.55	707.6/160818	877.4	32.24
240-2C	76.200	47.63	47.35	23.81	190.8	72.39	9.50	87.83	1020.6/231955	1255.3	45.23
50-3C	15.875	10.16	9.40	5.08	59.3	15.09	2.03	18.11	66.6/15136	77.8	3.09
60-3C	19.050	11.91	12.57	5.94	73.9	18.00	2.42	22.78	95.4/21682	111.1	4.54
80-3C	25.400	15.88	15.75	7.92	95.1	24.00	3.25	29.29	170.1/38659	198.4	7.89
100-3C	31.750	19.05	18.90	9.53	116.3	30.00	4.00	35.76	265.5/60341	309.6	11.77
120-3C	38.100	22.23	25.22	11.10	145.2	35.70	4.80	45.44	381.0/66591	437.2	17.53
140-3C	44.450	25.40	25.22	12.70	156.8	41.00	5.60	48.87	517.2/117545	593.3	22.20
160-3C	50.800	28.58	31.55	14.27	186.0	47.80	6.40	58.55	680.4/154636	780.6	30.02
180-3C	57.150	35.71	35.48	17.46	210.2	53.60	7.20	65.84	840.7/191068	983.6	38.22

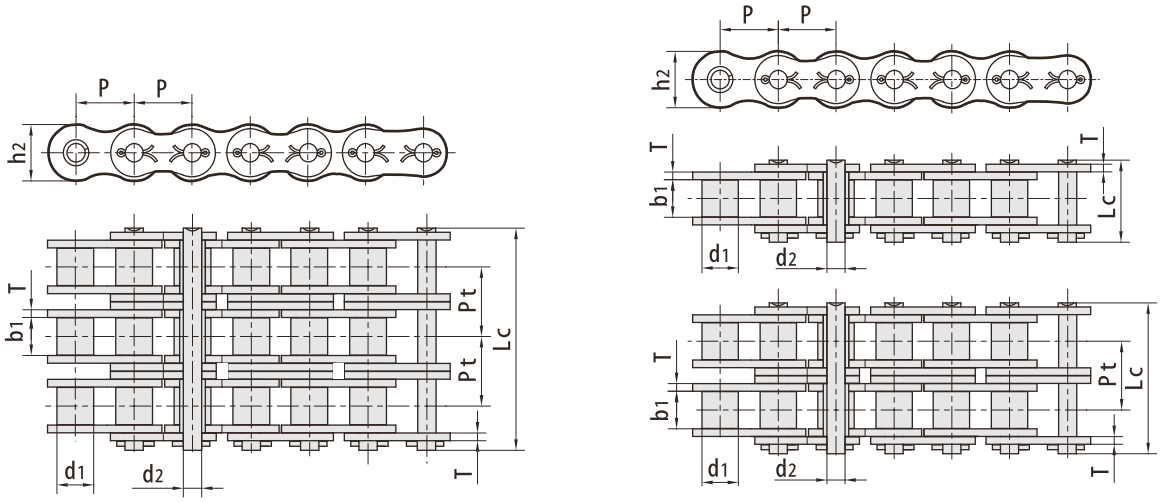

RBL ANSI chain number	Pitch P mm	Roller diameter d1 mm	Width between inner plates b1 mm	Pin diameter d2 mm	Pin length L max mm	Inner plate depth h2 mm	Plate thickness T mm	Transverse pitch mm	Tensile strength Q min kN/lbf	Average Tensile strength kN	Weight kg/m
50H-1C	15.875	10.16	9.40	5.08	24.4	15.09	2.42	-	22.2/5045	30.2	1.25
60H-1C	19.050	11.91	12.57	5.94	31.6	18.00	3.25	-	31.8/7227	42.7	1.87
80H-1C	25.400	15.88	15.75	7.92	38.9	24.00	4.00	-	56.7/12886	71.4	3.10
100H-1C	31.750	19.05	18.90	9.53	46.9	30.00	4.80	-	88.5/20114	112.4	4.52
120H-1C	38.100	22.23	25.22	11.10	57.5	35.70	5.60	-	127.0/28864	160.9	6.60
140H-1C	44.450	25.40	25.22	12.70	62.2	41.00	6.40	-	172.4/39182	217.3	8.30
160H-1C	50.800	28.58	31.55	14.27	73.0	47.80	7.20	-	226.8/51545	285.8	10.30
180H-1C	57.150	35.71	35.48	17.46	81.6	53.60	8.00	-	281.0/63863	341.8	14.83
200H-1C	63.500	39.68	37.85	19.85	93.5	60.00	9.50	-	353.8,80409	444.5	19.16
240H-1C	76.200	47.63	47.35	23.81	115.9	72.30	12.70	-	510.3/115977	622.5	30.40
60H-2C	19.050	11.91	12.57	5.94	57.7	18.00	3.25	26.11	63.6/14454	84.5	3.71
80H-2C	25.400	15.88	15.75	7.92	72.0	24.00	4.00	32.59	113.4/25773	145.3	6.15
100H-2C	31.750	19.05	18.90	9.53	86.0	30.00	4.80	39.09	177.0/40227	225.9	9.03
120H-2C	38.100	22.23	25.22	11.10	106.4	35.70	5.60	48.87	254.0/57727	322.7	13.13
140H-2C	44.450	25.40	25.22	12.70	114.4	41.00	6.40	52.20	344.8/78364	437.7	16.60
160H-2C	50.800	28.58	31.55	14.27	134.9	47.80	7.20	61.90	453.6/103091	571.6	20.20
180H-2C	57.150	35.71	35.48	17.46	150.8	53.60	8.00	69.16	562.0/127726	680.0	29.20
200H-2C	63.500	39.68	37.85	19.85	171.8	60.00	9.50	78.31	707.6/160818	894.9	38.11
240H-2C	76.200	47.63	47.35	23.81	217.3	72.30	12.70	101.22	1000.0/227270	1200.0	60.50
60H-3C	19.050	11.91	12.57	5.94	83.8	18.00	3.25	26.11	95.4/21682	113.9	5.54
80H-3C	25.400	15.88	15.75	7.92	104.6	24.00	4.00	32.59	170.1/38659	203.5	9.42
100H-3C	31.750	19.05	18.90	9.53	125.1	30.00	4.80	39.09	265.5/60341	314.8	12.96
120H-3C	38.100	22.23	25.22	11.10	155.2	35.70	5.60	48.87	381.0/86591	444.7	19.64
140H-3C	44.450	25.40	25.22	12.70	166.6	41.00	6.40	52.20	517.2/117545	598.4	24.90
160H-3C	50.800	28.58	31.55	14.27	196.8	47.80	7.20	61.90	680.4/154636	787.3	30.10
180H-3C	57.150	35.71	35.48	17.46	220.0	53.60	8.00	69.16	843.0/191589	1011.0	44.10
200H-3C	63.500	39.68	37.85	19.85	250.1	60.00	9.50	78.31	1061.4/241227	1228.2	57.06
240H-3C	76.200	47.63	47.35	23.81	318.3	72.30	12.70	101.22	1500.0/340905	1650.0	91.00

SP series high strength short pitch roller chains

By adopting integrated optimum design of the structural dimensions,
parts material and heat treatment process, the tensile strength of SP series high strength roller chain is 28% more then the A series standard roller chain.
However it has excellent performances of fatigue strength and impact resistance etc...

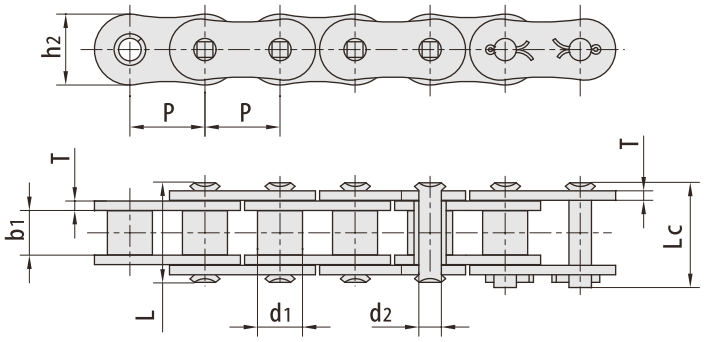

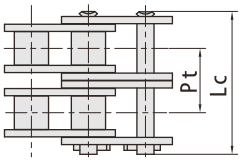

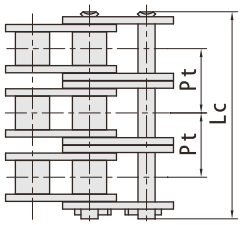

RBL chain number	Pitch	Roller diameter	Width between inner plates	Pin diameter	Pin length		Inner plate depth	Plate thickness	Transverse pitch	Tensile strength	Average Tensile strength	Weight
	P mm	d1 mm	b1 mm	d2 mm	L max mm	Lc max mm	h2 mm	T mm	Pt mm	Q min kN/lbf	Qo kN	q kg/m
80SP-1	25.40	15.88	15.75	7.94	32.7	36.5	24.1	3.2	-	77.5/17434	85.3	2.86
100SP-1	31.75	19.05	18.95	9.54	40.4	44.7	30.1	4.0	-	115.5/25982	127.0	4.21
120SP-1	38.10	22.23	25.22	11.11	50.3	54.3	36.2	4.8	-	165.0/37118	186.0	6.36
140SP-1	44.45	25.4	25.22	12.71	54.4	59	42.2	5.6	-	222.7/50098	245	8.04
160SP-1	50.80	28.58	31.55	14.29	64.8	69.6	48.2	6.4	-	285.5/54215	314.0	10.80
200SP-1	63.50	39.68	37.85	19.85	80.3	87.2	60.3	8.0	-	445.5/100208	490.0	18.00
80SP-2	25.40	15.88	15.75	7.94	62.7	65.8	24.1	3.2	29.29	155.0/34868	170.6	5.68
100SP-2	31.75	19.05	18.95	9.54	76.4	80.5	30.1	4.0	35.76	231.0/51965	255.0	8.34
120SP-2	38.10	22.23	25.22	11.11	95.8	99.7	36.2	4.8	45.44	339.0/76260	373.0	12.63
140SP-2	44.45	25.40	25.22	12.71	103.3	107.9	42.2	5.6	48.87	445.5/100218	490.0	15.92
160SP-2	50.80	28.58	31.55	14.29	123.3	128.1	48.2	6.4	58.55	571.0/128430	628.0	21.43
200SP-2	63.50	39.68	37.85	19.85	151.9	158.8	60.3	8.0	71.55	892.0/200621	981.0	35.00
80SP-3	25.40	15.88	15.75	7.94	91.7	95.1	24.1	3.2	29.29	232.5/52302	255.9	8.18
100SP-3	31.75	19.05	18.95	9.54	112.2	116.3	30.1	4.0	35.76	347.3/78128	382.0	12.47
120SP-3	38.10	22.23	25.22	11.11	141.4	145.2	36.2	4.8	45.44	508.0/114278	559.0	18.90
140SP-3	44.45	25.40	25.22	12.71	152.2	156.8	42.2	5.6	48.87	668.0/150271	735.0	23.84
160SP-3	50.80	28.58	31.55	14.29	181.8	186.6	48.2	6.4	58.55	855.5/192441	941.0	32.10
200SP-3	63.50	39.68	37.85	19.85	223.5	230.4	60.3	8.0	71.55	1336.4/300633	1470.0	52.50

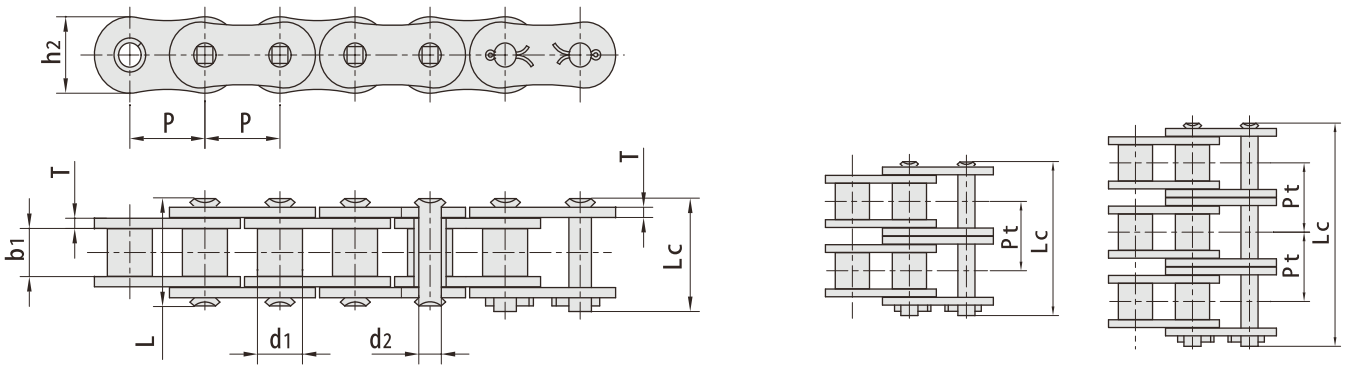

RBL chain number	Pitch	Roller diameter	Width between inner plates	Pin diameter	Pin length		Inner plate depth	Plate thickness	Transverse pitch	Tensile strength	Average Tensile strength	Weight
	P mm	d1 mm	b1 mm	d2 mm	L max mm	Lc max mm	h2 mm	T mm	Pt mm	Q min kN/lbf	Qo kN	q kg/m
80HSP-1	25.40	15.88	15.75	7.94	36.2	38.9	24.1	4.0	-	89.2/20066	98.1	3.36
100HSP-1	31.75	19.05	18.95	9.54	43.6	46.9	30.1	4.8	-	131.8/29649	145.0	4.90
120HSP-1	38.10	22.23	25.22	11.11	53.5	57.5	36.2	5.6	-	176.0/39592	196.0	7.12
140HSP-1	44.45	25.40	25.22	12.71	57.6	62.2	42.2	6.4	-	231.9/52149	255.0	8.88
160HSP-1	50.80	28.58	31.55	14.29	68.2	73.0	48.2	7.2	-	294.5/66260	324.0	11.72
200HSP-1	63.50	39.68	37.85	19.85	86.6	93.5	60.3	9.5	-	543.6/122295	598.0	19.80
80HSP-2	25.40	15.88	15.75	7.94	68.8	72.0	24.1	4.0	32.59	178.4/40132	196.2	6.65
100HSP-2	31.75	19.05	18.95	9.54	82.7	86.0	30.1	4.8	39.09	263.6/59299	290.0	9.71
120HSP-2	38.10	22.23	25.22	11.11	102.4	106.4	36.2	5.6	48.87	356.4/80175	392.0	14.12
140HSP-2	44.45	25.40	25.22	12.71	109.8	114.4	42.2	6.4	52.20	463.6/104300	510.0	17.38
160HSP-2	50.80	28.58	31.55	14.29	130.1	134.9	48.2	7.2	61.90	588.0/132275	647.0	23.00
200HSP-2	63.50	39.68	37.85	19.85	164.9	171.8	60.3	9.5	78.31	1091.0/245429	1200.0	38.50
80HSP-3	25.40	15.88	15.75	7.94	101.4	104.6	24.1	4.0	32.59	267.6/60200	294.3	9.95
100HSP-3	31.75	19.05	18.95	9.54	121.8	125.1	30.1	4.8	39.09	395.4/88948	435.0	14.53
120HSP-3	38.10	22.23	25.22	11.11	151.2	155.2	36.2	5.6	48.87	534.5/120250	588.0	21.12
140HSP-3	44.45	25.40	25.22	12.71	162.0	166.6	42.2	6.4	52.20	695.5/156448	765.0	25.88
160HSP-3	50.80	28.58	31.55	14.29	192.0	196.8	48.2	7.2	61.90	882.7/198576	971.0	34.22
200HSP-3	63.50	39.68	37.85	19.85	243.2	250.1	60.3	9.5	78.31	1627.3/366073	1790.0	57.29

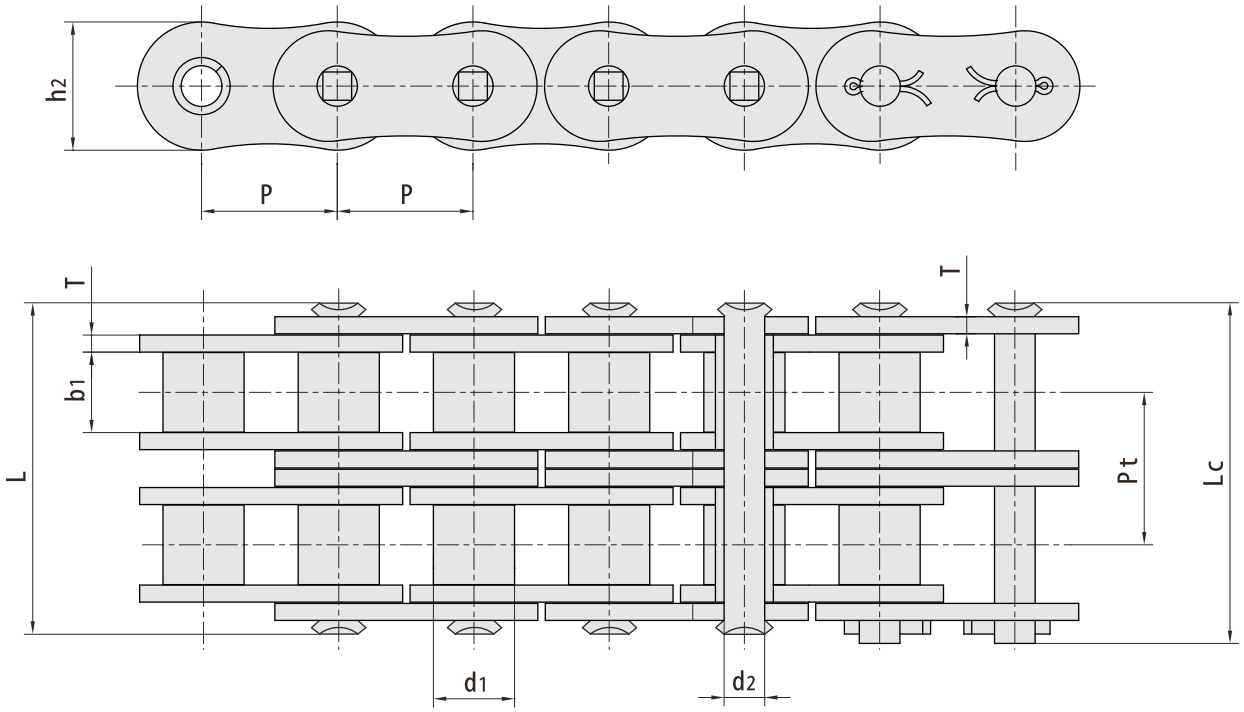

RBL chain number	Pitch	Roller diameter	Width between inner plates	Pin diameter	Pin length		Inner plate depth	Plate thickness	Transverse pitch	Tensile strength	Average Tensile strength	Weight
	P mm	d1 mm	b1 mm	d2 mm	L max mm	Lc max mm	h2 mm	T mm	Pt mm	Q min kN/lbf	Qo kN	q kg/m
80SPE-2	25.40	15.88	15.75	7.94	62.7	65.8	24.1	3.2	29.29	155.0/34868	170.6	5.68
100SPE-2	31.75	19.05	18.95	9.54	76.4	80.5	30.1	4.0	35.76	231.0/51965	255.0	8.34
120SPE-2	38.10	22.23	25.22	11.11	95.8	99.7	36.2	4.8	45.44	339.0/76260	373.0	12.63
140SPE-2	44.45	25.40	25.22	12.71	103.3	107.9	42.2	5.6	48.87	445.5/100218	490.0	15.92
160SPE-2	50.80	28.58	31.55	14.29	123.3	128.1	48.2	6.4	58.55	571.0/128430	628.0	21.43
200SPE-2	63.50	39.68	37.85	19.85	151.9	158.8	60.3	8.0	71.55	892.0/200621	981.0	35.00
80HSPE-2	25.40	15.88	15.75	7.94	68.8	72.0	24.1	4.0	32.59	178.4/40132	196.2	6.65
100HSPE-2	31.75	19.05	18.95	9.54	82.7	86.0	30.1	4.8	39.09	263.6/59299	290.0	9.71
120HSPE-2	38.10	22.23	25.22	11.11	102.4	106.4	36.2	5.6	48.87	356.4/80175	392.0	14.12
140HSPE-2	44.45	25.40	25.22	12.71	109.8	114.4	42.2	6.4	52.20	463.6/104300	510.0	17.38
160HSPE-2	50.80	28.58	31.55	14.29	130.1	134.9	48.2	7.2	61.90	588.0/132275	647.0	23.00
200HSPE-2	63.50	39.68	37.85	19.85	164.9	171.8	60.3	9.5	78.31	1091.0/245429	1200.0	38.50

Note: central plates are press fit assembly.

SH series roller chains have a greater tensile strength (about an additional 25% - 35%) over ANSI standard roller chains by using through hardened pins, these chains also provide a greater shock load resistance.
The dimensions of the chain are identical to ANSI heavy series standard roller chains.

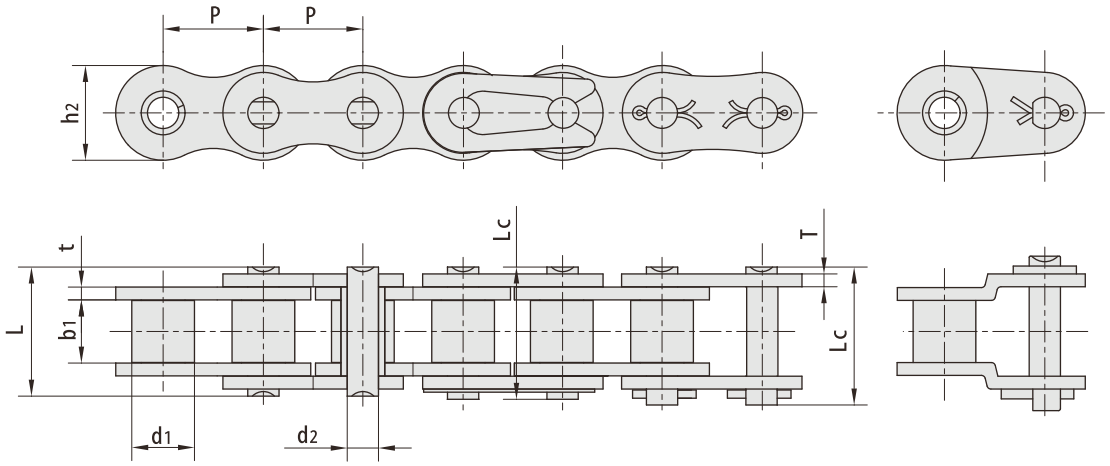

RBL chain number	Pitch	Roller diameter	Width between inner plates	Pin diameter	Pin length		Inner plate depth	Plate thickness	Tensile strength	Average Tensile strength	Weight
	P mm	d1 mm	b1 mm	d2 mm	L max mm	Lc max mm	h2 mm	T mm	Q min kN/lbf	Qo kN	q kg/m
*25SH	6.350	3.30	3.18	2.31	9.0	-	6.00	1.04	5.09/1157	5.6	0.11
*35SH	9.525	5.08	4.77	3.58	13.3	14.3	9.00	1.50	11.00/2500	13.6	0.41
40SH	12.700	7.95	7.85	3.96	18.8	19.9	12.00	2.03	22.40/5091	24.8	0.82
50SH	15.875	10.16	9.40	5.08	22.1	23.4	15.09	2.42	30.40/6909	36.2	1.25
60SH	19.050	11.91	12.57	5.94	29.2	31.6	18.00	3.25	44.10/10023	50.4	1.87
#5H 63	19.050	14.29	9.55	7.30	27.9	-	19.60	4.15/3.25	65.70/14932	73.0	2.62
60SHF1	19.050	11.91	9.50	5.94	25.4	27.6	18.00	3.25	44.10/9914	48.5	1.77
#C 60SH F2	19.050	12.70	11.10	7.11	29.3	-	18.90	4.0/3.25	61.80/13893	68.0	2.47
#C 70SH	22.225	15.60	14.30	7.94	36.6	-	22.60	4.8/4.0	88.25/20056	98.0	3.75
#C70SH Fl	22.225	15.60	14.30	7.93	35.8	-	23.50	4.8/4.0	81.40/18299	89.5	3.76
80SH	25.400	15.88	15.75	7.92	36.2	37.7	24.00	4.00	88.20/20045	93.0	3.10
955	28.575	21.30	17.46	11.10	46.8	-	30.60	6.4/S.6	142.10/35635	156.8	7.95
1005H	31.750	19.05	18.90	9.53	43.6	46.9	30.00	4.80	116.60/26500	129.1	4.52
120SH	38.100	22.23	25.22	11.10	53.5	57.5	35.70	5.60	15820/35954	175.3	6.60
140SH	44.450	25.40	25.22	12.70	57.6	62.2	41.00	6.40	206.00/46818	266.5	8.30
160SH	50.800	28.58	31.55	14.27	68.2	73.0	47.80	7.20	274.00/62273	293.0	10.30
180SH	57.150	35.71	35.48	17.46	75.9	81.6	53.60	8.00	33720/75803	370.9	14.83
200SH	63.500	39.68	37.85	19.85	86.6	93.5	60.00	9.50	506.10/115023	562.3	19.16
240SH	76.200	47.63	47.35	23.81	109.6	115.9	72.30	12.70	650.00/l4612C	715.0	30.40

* Straight side plates

* bush chain: d1 in the table indicaties the external diameter of the bush.

RBLX3: series high performance roller chains are based on optimized design, advanced technology and excellent quality control fatigue strength is 60 percent more then iso 606 standard roller chain of the same specification, and the wear resistant is increased.

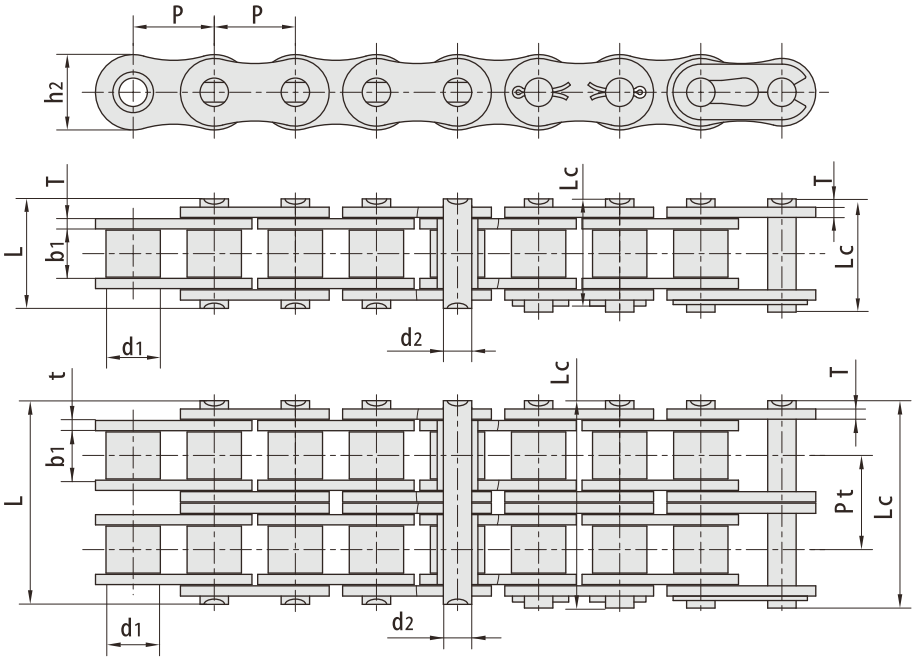

RBL chain number	Pitch	Roller diameter	Width between inner plates	Pin diameter	Pin length		Inner plate depth	Plate thickness	Tensile strength	Average Tensile strength	Weight
	P mm	d1 mm	b1 mm	d2 mm	L max mm	Lc max mm	h2 mm	T mm	Q min kN/lbf	Qo kN	q kg/m
*255 H	6.350	3.30	3.18	2.31	9.0	-	6.00	1.04	5.09/1157	5.6	0.11
*35SH	9.525	5.08	4.77	3.58	13.3	14.3	9.00	1.50	11.00/2500	13.6	0.41
40SH	12.700	7.95	7.85	3.96	18.8	19.9	12.00	2.03	22.40/5091	24.8	0.82
505 H	15.875	10.16	9.40	5.08	22.1	23.4	15.09	2.42	30.40/6909	36.2	1.25
60SH	19.050	11.91	12.57	5.94	29.2	31.6	18.00	3.25	44.10/10023	50.4	1.87
#5H 63	19.050	14.29	9.55	7.30	27.9	-	19.60	4.15/3.25	65.70/14932	73.0	2.62
60SHF1	19.050	11.91	9.50	5.94	25.4	27.6	18.00	3.25	44.10/9914	48.5	1.77
#C 60SH F2	19.050	12.70	11.10	7.11	29.3	-	18.90	4.0/3.25	61.80/13893	68.0	2.47
#C 70SH	22.225	15.60	14.30	7.94	36.6	-	22.60	4.8/4.0	88.25/20056	98.0	3.75
#C70SH Fl	22.225	15.60	14.30	7.93	35.8	-	23.50	4.8/4.0	81.40/18299	89.5	3.76
80SH	25.400	15.88	15.75	7.92	36.2	37.7	24.00	4.00	88.20/20045	93.0	3.10
955	28.575	21.30	17.46	11.10	46.8	-	30.60	6.4/S.6	142.10/35635	156.8	7.95
1005H	31.750	19.05	18.90	9.53	43.6	46.9	30.00	4.80	116.60/26500	129.1	4.52
120SH	38.100	22.23	25.22	11.10	53.5	57.5	35.70	5.60	15820/35954	175.3	6.60
140SH	44.450	25.40	25.22	12.70	57.6	62.2	41.00	6.40	206.00/46818	266.5	8.30
160SH	50.800	28.58	31.55	14.27	68.2	73.0	47.80	7.20	274.00/62273	293.0	10.30
180SH	57.150	35.71	35.48	17.46	75.9	81.6	53.60	8.00	33720/75803	370.9	14.83
2005 H	63.500	39.68	37.85	19.85	86.6	93.5	60.00	9.50	506.10/115023	562.3	19.16
2405 H	76.200	47.63	47.35	23.81	109.6	115.9	72.30	12.70	650.00/l4612C	715.0	30.40

* Straight side plates

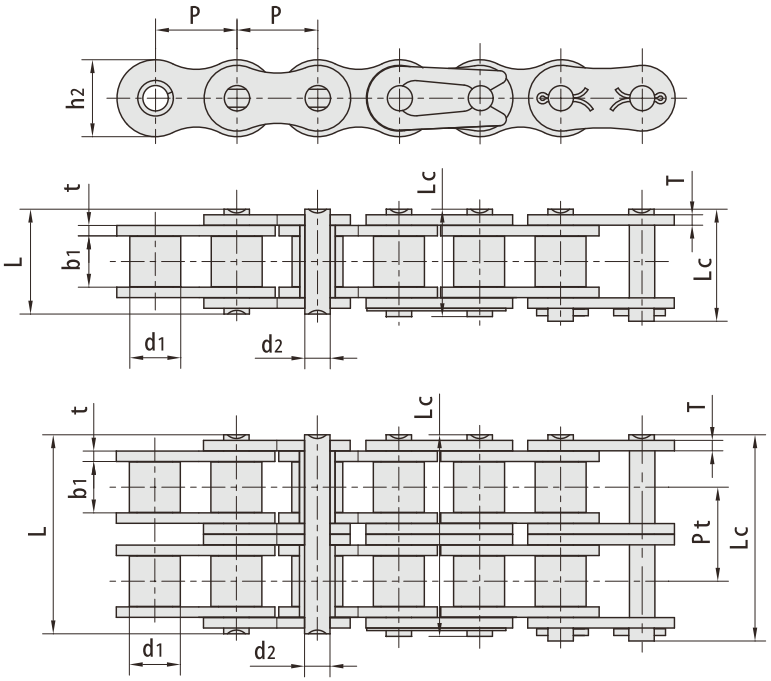

RBL chain number	Pitch	Roller diameter	Width between inner plates	Pin diameter	Pin length		Inner plate depth	Plate thickness	Transverse pitch	Tensile strength	Average Tensile strength	Weight
	P mm	d1 mm	b1 mm	d2 mm	L max mm	Lc max mm	h2 mm	T mm	Pt mm	Q min kN/lbf	Qo kN	q kg/m
*06C F40	9.525	5.08	9.80	3.58	17.8	18.60	9.00	1.30	-	7.9/1776	8.69	0.45
205	12.700	8.51	6.40	4.45	15.2	16.30	11.80	1.6/1.3	-	18.00/4049	19.00	0.85
423	12.700	8.51	6.40	4.45	15.6	17.10	12.40	1.70	-	19.60/4455	21.90	0.71
478	12.700	7.80	4.80	4.00	11.6	13.65	10.46	1.25	-	9.80/2227	12.80	0.39
170GSX	12.700	7.75	6.45	3.96	14.8	16.40	11.50	1.6/1.4	-	17.15/3860	18.50	0.62
415F19	12.700	7.77	4.76	3.60	11.0	12.40	9.70	1.00	-	6.86/1559	7.60	0.32
415H	12.700	7.77	4.76	3.96	13.1	14.50	12.00	1.50	-	14.40/3273	16.10	0.55
423F2	12.700	8.51	6.40	4.45	15.6	17.10	11.80	1.60	-	18.2/4091	20.02	0.67
10AF50	15.875	14.20	19.40	5.08	30.9	32.60	13.00	2.03	-	16.40/3726	18.00	2.14
515	19.050	12.07	13.50	5.72	28.6	31.30	16.20	3.00	-	30.00/6748	33.00	1.83
12AF86-2	19.050	11.91	12.57	5.94	47.0	49.60	18.00	2.42	20.90	62.30/14158	68.53	3.58
•C60F40	19.050	11.91	12.57	5.94	25.9	27.70	18.00	2.42	-	31.8/7149	34.98	1.79
630F1	19.050	11.91	9.40	5.94	26.3	-	18.00	3.25	-	35.3/7935	38.83	1.82
12AF105	19.050	11.91	6.35	5.94	19.5	21.20	18.00	2.42	-	31.8/7149	34.98	1.31
12AF63-2	19.050	11.91	12.70	5.94	51.6	53.40	18.00	2.42	25.50	63.6/14297	69.96	3.26
'C12AF128-3	19.050	15.00	12.57	5.94	71.5	73.30	18.20	2.42	22.78	95.4/21446	104.94	5.44
16AF52	25.400	15.88	78.00	7.92	95.6	99.10	24.00	3.25	-	56.70/12882	62.00	6.46
16AF62	25.400	15.88	47.00	7.92	64.3	67.08	24.00	3.25	-	56.70/12882	62.00	4.29

* Straight side plates

* bush chain: d1 in the table indicaties the external diameter of the bush.

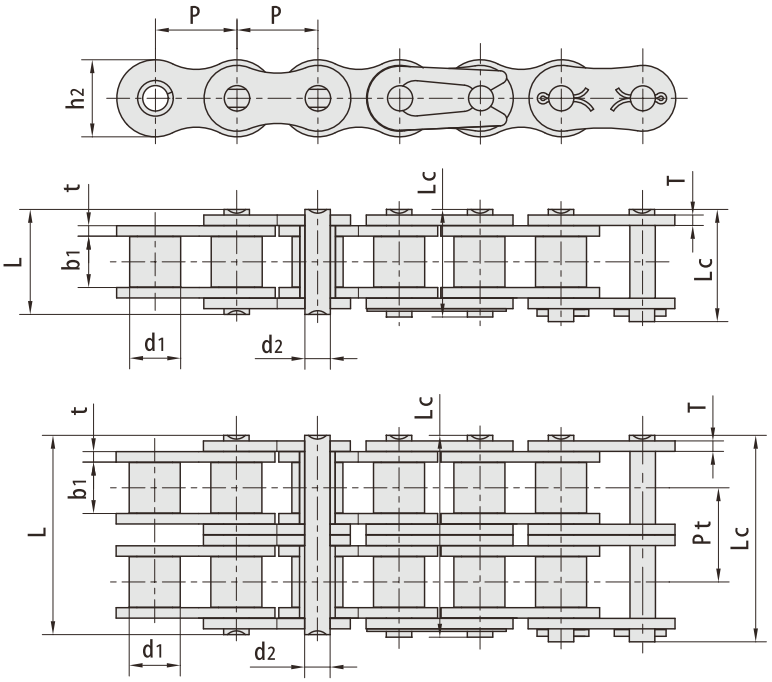

RBL chain number	Pitch	Roller diameter	Width between inner plates	Pin diameter	Pin length		Inner plate depth	Plate thickness	Transverse pitch	Tensile strength	Average Tensile strength	Weight
	P mm	d1 mm	b1 mm	d2 mm	L max mm	Lc max mm	h2 mm	T mm	Pt mm	Q min kN/lbf	Qo kN	q kg/m
16AF93	25.400	15.88	12.70	7.92	25.0	28.5	20.50	2.03	-	28.00/63616	30.80	1.74
16AF94	25.400	15.88	33.50	7.92	50.5	52.0	24.00	3.25	-	55.60/12636	61.16	3.77
#C16AF112	25.400	18.25	15.90	9.54	45.4	-	24.50	6.00	-	116.2/26122	122.00	5.40
20AF22	31.750	19.05	18.90	9.53	-	44.7	30.00	4.00	-	50.00/11360	55.00	3.97
20AF26	31.750	19.05	30.80	9.53	64.0	64.0	30.00	4.00	-	86.70/l9704	95.37	5.03
20AF31-5	31.750	19.05	18.90	9.53	183.6	187.9	30.10	4.00	35.76	550.00/124998	605.00	20.20
24AF5-4	38.100	22.23	19.05	11.10	161.3	165.3	35.70	4.80	39.16	498.2/113225	548.02	21.88
24AF18-2	38.100	22.23	25.20	11.10	97.3	101.2	35.70	4.80	45.44	249.1/56612	274.01	12.00
24AF19	38.100	22.23	25.22	11.10	50.3	-	35.70	4.80	-	95.0/21590	104.50	5.71
24AF20-2	38.100	22.23	25.22	11.10	105.4	109.2	35.70	4.80	45.44	254.0/57099	279.40	12.56
28AF1-2	44.450	25.40	25.22	12.70	103.3	112.2	41.00	5.60	48.87	338.1/76816	371.90	15.06
32AF2	50.800	32.00	31.75	17.00	64.8	69.6	48.00	6.40	-	200.0/45454	222.50	11.61
32AF9	50.800	28.58	41.55	14.27	86.0	86.0	47.80	6.4/8.8	-	222.4/50544	244.64	11.55
32AF33	50.800	28.58	89.75	14.27	123.3	128.1	47.80	6.40	-	222.4/50544	244.64	16.01
#C32AF36	50.800	28.58	46.77	14.29	63.8	63.8	44.45	6.40	-	200.0/45454	220.00	14.85
32AF42	50.800	32.00	31.75	17.00	68.0	72.8	48.00	7.20	-	200.0/44960	220.00	12.55
32 AT	50.800	28.58	15.88	14.27	36.2	40.8	47.80	3.25	-	111.2/25272	123.60	5.21
36AF2	57.150	33.34	35.48	17.46	72.8	78.6	53.60	7.20	-	280.20/63681	308.22	13.17

* Straight side plates

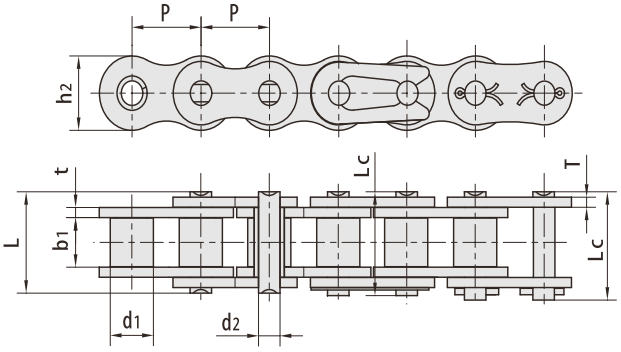

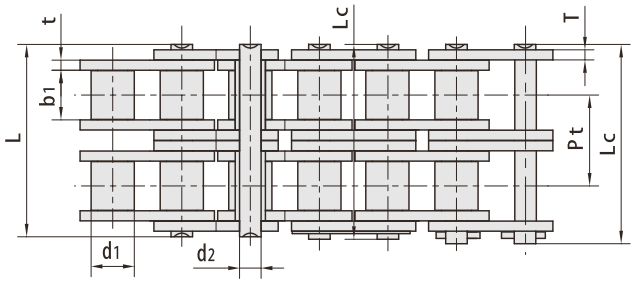

RBL chain number	Pitch	Roller diameter	Width between inner plates	Pin diameter	Pin length		Inner plate depth	Plate thickness	Transverse pitch	Tensile strength	Average Tensile strength	Weight
	P mm	d1 mm	b1 mm	d2 mm	L max mm	Lc max mm	h2 mm	T mm	Pt mm	Q min kN/lbf	Qo kN	q kg/m
#06BF30-2	9.525	6.35	5.40	3.28	23.7	-	9.60	1.60	10.24	16.5/3748	18.15	1.05
A06B-2	9.525	6.35	5.72	3.28	23.4	24.40	8.20	1.30	10.24	16.9/3841	18.70	0.75
08BF	12.700	8.51	5.55	4.45	14.6	16.10	11.80	1.60	-	17.8/4045	19.20	0.66
415B	12.700	7.75	4.88	4.09	12.9	14.40	10.30	1.30	-	12.0/2727	14.20	0.45
415BF1	12.700	7.75	4.88	4.09	11.5	13.00	10.30	1.00	-	9.0/2045	10.60	0.38
415BF3	12.700	7.75	4.80	4.09	11.6	13.65	10.30	1.20	-	9.8/2227	10.70	0.43
415BF5	12.700	7.75	5.10	4.09	14.4	16.00	9.90	1.8/1.6	-	16.0/3600	16.50	0.46
415BF7	12.700	7.75	4.88	3.58	13.8	15.00	10.30	1.30	-	6.0/1363	10.70	0.40
#C08BF77	12.700	8.51	21.67	4.45	31.0	32.2	11.80	1.60	-	18.0/4046	19.00	1.28
10BF19	15.875	10.16	6.45	5.08	16.4	18.20	14.70	1.70	-	22.0/5000	24.20	0.89
10BF20	15.875	10.16	6.45	5.08	16.4	18.20	14.70	1.70	-	23.6/5363	25.96	0.86
10BF68	15.875	10.16	9.65	5.08	18.5	19.90	14.70	1.7/1.5	-	22.4/5090	24.64	0.93
*C10BF56-2	15.875	10.16	9.65	5.08	35.8	37.20	13.90	1.70	16.59	44.5/10113	48.95	1.70
10BF88	15.875	10.16	6.48	5.08	16.4	17.8	14.70	1.70	-	22.4/5036	24.64	0.84
#C10BF87-2	15.875	10.16	9.65	5.08	36.1	37.5	18.00	1.70	16.59	44.5/I0004	48.95	2.29
12BF12	19.050	12.07	11.68	5.72	25.8	27.8	20.00	2.60	-	37.0/8318	40.70	1.90
12BF14	19.050	12.07	30.56	5.72	42.0	43.6	16.00	1.85	-	29.0/6591	32.20	2.13
12BF55-2	19.050	12.07	11.68	5.72	43.2	44.8	16.00	2.42	19.46	57.8/13136	63.58	2.51
12BF58	19.050	12.70	31.40	5.72	43.5	46.2	16.00	2.03	-	29.0/6591	32.20	2.36
12BF99	19.050	12.07	11.68	5.72	22.5	-	16.00	1.85	-	29.0/6519	31.90	1.21
14BF1	22.225	14.30	14.60	9.00	36.3	38.0	23.50	4.80/4.0	-	75.0/16871	82.50	3.59
16BF1	25.400	15.88	12.20	8.28	31.4	32.7	21.00	4.15/3.1	-	60.0/I3636	71.40	2.51
*16B-BF1	25.400	11.71	17.02	8.28	36.1	39.1	21.00	3.10	-	60.0/I3636	66.00	2.33
16BF2	25.400	15.88	17.02	8.28	38.6	39.8	21.00	4.15	-	60.0/13636	71.40	3.08
16BF5	25.400	15.88	12.70	8.28	30.8	32.1	20.00	3.50/3.0	-	50.0/11364	57.50	2.37
16BF33	25.400	15.88	12.70	8.28	32.2	35.1	21.00	3.10	-	60.0/13636	66.00	2.54
#C16BF84-2	25.400	15.88	17.02	7.92	68.0	69.4	21.00	4.15/3.1	31.88	106.0/23829	116.60	5.84
16BF92	25.400	15.88	17.02	8.28	36.1	39.1	21.00	4.15/3.1	-	60.0/I3636	66.00	2.76
16BF137	25.400	16.80	17.02	8.28	36.1	37.4	21.00	4.15/3.1	-	60.0/I3488	66.00	2.88
20BF14	31.750	19.05	19.56	10.19	45.6	49.3	26.40	5.60/4.5	-	105.0/23856	115.50	4.57
20BF19	31.750	30.00	19.56	10.19	41.3	-	26.40	4.50/3.5	-	95.0/21590	104.50	5.86

* Straight side plates

* bush chain: d1 in the table indicaties the external diameter of the bush.

Other roller chains

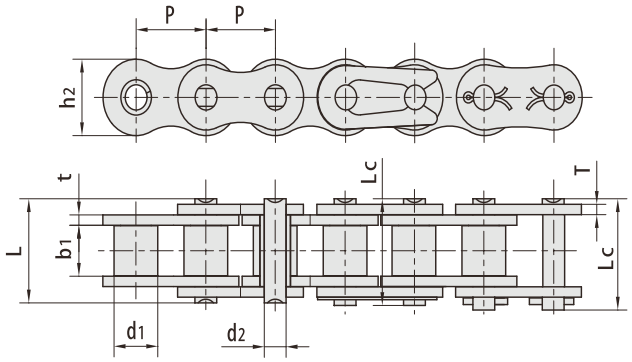

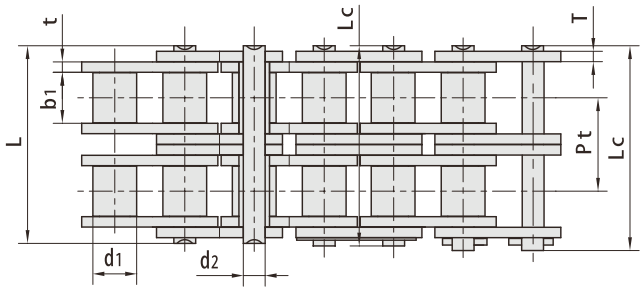

RBL chain number	Pitch	Roller diameter	Width between inner plates	Pin diameter	Pin length		Inner plate depth	Plate thickness	Transverse pitch	Tensile strength	Average Tensile strength	Weight
	P mm	d1 mm	b1 mm	d2 mm	L max mm	Lc max mm	h2 mm	T mm	Pt mm	Q min kN/lbf	Qo kN	q kg/m
20BF40	31.750	19.05	19.56	10.19	-	45.0	26.40	4.5/3.5	-	73.0/16410	80.30	3.87
20BF48	31.750	19.05	19.56	10.05	42.1	-	26.40	4.5/S.5	-	95.0/21356	104.50	3.95
20BF55	31.750	19.05	19.56	10.19	41.3	-	26.40	4.5/S.5	-	95.0/21356	104.50	3.91
#C24BF6	38.100	25.40	22.00	12.00	40.0	43.5	35.00	3.00	-	95.0/21590	104.50	5.23
*24BF7	38.100	18.42	25.40	14.63	53.4	57.8	33.20	6.00/4.8	-	170.0/38635	187.00	5.80
24BF9	38.100	25.40	25.40	14.63	58.1	62.5	33.20	7.0/6.0	-	180.0/40908	198.00	7.98
24BF14	38.100	25.40	25.40	14.63	55.8	60.5	33.20	6/4.8	-	160.0/36363	176.00	7.14
#C 24B F18	38.100	25.40	25.40	14.63	53.4	57.8	33.00	6.00/4.8	-	160.0/36363	176.00	7.49
#C24B F19	38.100	25.40	25.40	14.63	53.4	57.8	35.80	6.00/4.8	-	160.086363	176.00	8.05
24BF20-2	38.100	25.40	25.40	14.63	101.7	106.2	33.20	6A.8	48.36	280.0/63635	308.00	12.43
#C24BF22	38.100	25.40	25.40	14.63	53.4	57.8	35.00	6.0/4.8	-	160.0/36363	176.00	7.91
24BF23	38.100	25.40	25.40	14.63	53.4	59.3	36.20	6/5.2	-	192.0/43635	211.20	7.92
24BF27	38.100	25.40	25.40	14.63	52.6	57.8	33.20	6.0/4.8	-	160.0/35968	176.00	6.99
28BF2	44.450	27.94	30.99	15.90	65.1	69.5	41.00	6.0/7.5	-	250.0/56817	275.00	10.17
28BF4	44.450	27.94	30.99	15.90	65.1	70.4	41.00	6.0/7.5	-	240.0/54535	264.00	10.40
28BF7	44.450	27.94	30.99	15.90	68.1	72.5	42.00	8.0/7.0	-	300.0/67440	330.00	11.70
32BF23	50.800	32.00	30.00	16.90	66.6	73.0	49.00	7.00	-	300.0/68181	330.00	11.70
#C32BF24	50.800	29.21	30.99	17.81	-	71.0	45.00	6.0/7.0	-	250.0/56817	275.00	11.40
32BF26	50.800	29.21	30.99	17.81	68.0	73.0	42.00	7.00	-	250.0/56817	275.00	10.60
32BF30	50.800	29.21	30.99	17.81	68.0	73.0	42.00	6.3/7.65	-	250.0/56817	275.00	10.28
32BF31-B	50.800	17.81	31.50	22.48	69.5	74.5	42.00	7.0/7.5	-	250.0/56817	275.00	9.30
32BF35	50.800	29.21	30.99	17.81	68.0	72.5	48.00	7.5/C.4	-	350.0/78680	385.00	11.86
40BF4-2	63.500	39.37	38.10	22.89	154.5	161.5	52.96	8.58.0	72.29	375.085226	412.50	31.87
48BF7	76.200	48.26	45.72	29.24	105.0	131.5	63.80	12.0/10.0	-	500.0/112400	550.00	27.36
56BF6	88.900	53.98	53.34	34.32	114.6	123.0	77.80	13.5/12.0	-	850.0/191080	935.00	35.78

* Straight side plates

* bush chain: d1 in the table indicaties the external diameter of the bush.

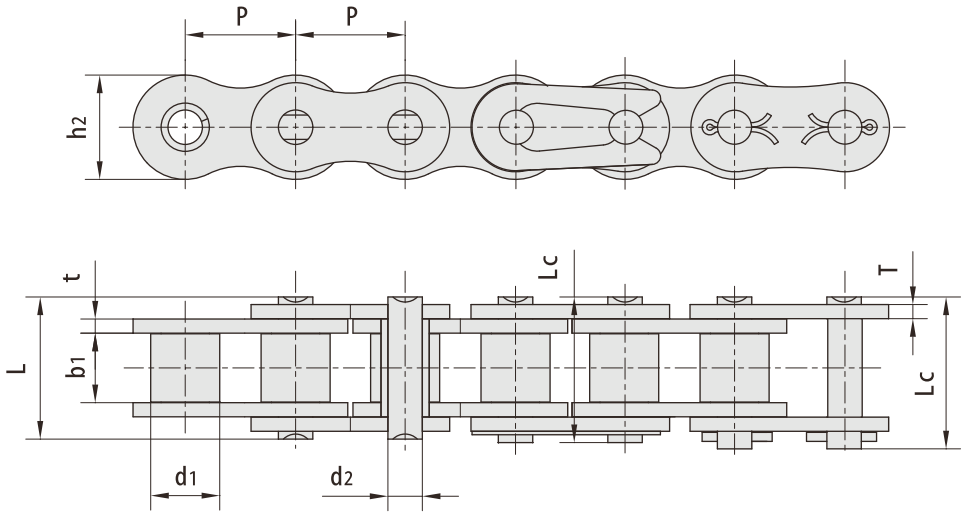

RBL chain number	Pitch	Roller diameter	Width between inner plates	Pin diameter	Pin length		Inner plate depth	Plate thickness	Breaking load	Weight
	P mm	d1 mm	b1 mm	d2 mm	L max mm	Lc max mm	h2 mm	T mm	Q min kN/lbf	q kg/m
*25ZP	6.350	3.30	3.18	2.31	7.90	8.40	6.00	0.80	3.50/795	0.15
*35ZP	9.525	5.08	4.77	3.58	12.40	13.17	9.00	1.30	7.90/1795	0.33
41ZP	12.700	7.77	6.25	3.58	13.75	15.00	9.91	1.30	6.67/1516	0.41
40ZP	12.700	7.95	7.85	3.96	16.60	17.80	12.00	1.50	14.10/3205	0.62
50ZP	15.875	10.16	9.40	5.08	20.70	22.20	15.09	2.03	22.20/5045	1.02
60ZP	19.050	11.91	12.57	5.94	25.90	27.70	18.00	2.42	31.80/7227	1.50
80ZP	25.400	15.88	15.75	7.92	32.70	35.00	24.00	3.25	56.70/12886	2.60
100ZP	31.750	19.05	18.90	9.53	40.40	44.70	30.00	4.00	88.50/20114	3.91
120ZP	38.100	22.23	25.22	11.10	50.30	54.30	35.70	4.80	127.00/28864	5.62
140ZP	44.450	25.40	25.22	12.70	54.40	59.00	41.00	5.60	172.40/39182	7.50
160ZP	50.800	28.58	31.55	14.27	64.80	69.60	47.80	6.40	226.80/51545	10.10
04BZP	6.000	4.00	2.80	1.85	6.80	7.80	5.00	0.60	3.00/682	0.11
05BZP	8.000	5.00	3.00	2.31	8.20	8.90	7.10	0.80	5.00/1136	0.20
#06BZP	9.525	6.35	5.72	3.28	13.15	14.10	8.20	1.30	9.00/2045	0.41
08BZP	12.700	8.51	7.75	4.45	16.70	18.20	11.80	1.60	18.00/4091	0.69
10BZP	15.875	10.16	9.65	5.08	19.50	20.90	14.70	1.70	22.40/5091	0.93
12BZP	19.050	12.07	11.68	5.72	22.50	24.20	16.00	1.85	29.00/6591	1.15
16BZP	25.400	15.88	17.02	8.28	36.10	37.40	21.00	4.15/3.1	60.00/13636	2.71
20BZP	31.750	19.05	19.56	10.19	41.30	45.00	26.40	4.5/S.5	95.00/21591	3.70
24BZP	38.100	25.40	25.40	14.63	53.40	57.80	33.20	6.0/4.8	160.0/36364	7.10
28BZP	44.450	27.94	30.99	15.90	65.10	69.50	36.70	7.5/6.0	200.0/45455	8.50
32BZP	50.800	29.21	30.99	17.81	66.00	71.00	42.00	7.0/6.0	250.0/56818	10.25

* Straight side plates

* bush chain: d1 in the table indicaties the external diameter of the bush.

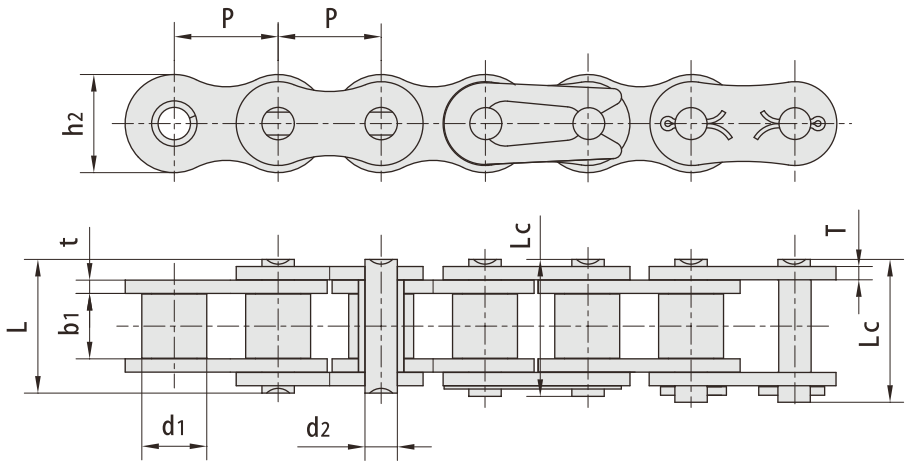

RBL chain number	Pitch P mm	Roller diameter d1 mm	Width between inner plates b1 mm	Pin diameter d2 mm	Pin length L max mm	Pin length Lc max mm	Inner plate depth h2 mm	Plate thickness T mm	Breaking load Q min kN/lbf	Weight q kg/m
*25NP	6.350	3.30	3.18	2.31	7.90	8.40	6.00	0.80	3.50/795	0.15
*35NP	9.525	5.08	4.77	3.58	12.40	13.17	9.00	1.30	7.90/1795	0.33
41NP	12.700	7.77	6.25	3.58	13.75	15.00	9.91	1.30	6.67/1516	0.41
40NP	12.700	7.95	7.85	3.96	16.60	17.80	12.00	1.50	14.10/3205	0.62
50NP	15.875	10.16	9.40	5.08	20.70	22.20	15.09	2.03	22.20/5045	1.02
60NP	19.050	11.91	12.57	5.94	25.90	27.70	18.00	2.42	31.80/7227	1.50
80NP	25.400	15.88	15.75	7.92	32.70	35.00	24.00	3.25	56.70/12886	2.60
100NP	31.750	19.05	18.90	9.53	40.40	44.70	30.00	4.00	88.50/20114	3.91
120NP	38.100	22.23	25.22	11.10	50.30	54.30	35.70	4.80	127.00/28864	5.62
140NP	44.450	25.40	25.22	12.70	54.40	59.00	41.00	5.60	172.40/39182	7.50
160NP	50.800	28.58	31.55	14.27	64.80	69.60	47.80	6.40	226.80/51545	10.10
04BNP	6.000	4.00	2.80	1.85	6.80	7.80	5.00	0.60	3.00/682	0.11
05BNP	8.000	5.00	3.00	2.31	8.20	8.90	7.10	0.80	5.00/1136	0.20
#06BNP	9.525	6.35	5.72	3.28	13.15	14.10	8.20	1.30	9.00/2045	0.41
08BNP	12.700	8.51	7.75	4.45	16.70	18.20	11.80	1.60	18.00/4091	0.69
10BNP	15.875	10.16	9.65	5.08	19.50	20.90	14.70	1.70	22.40/5091	0.93
12BNP	19.050	12.07	11.68	5.72	22.50	24.20	16.00	1.85	29.00/6591	1.15
16BNP	25.400	15.88	17.02	8.28	36.10	37.40	21.00	4.15/3.1	60.00/13636	2.71
20BNP	31.750	19.05	19.56	10.19	41.30	45.00	26.40	4.5/3.5	95.00,21591	3.70
24BNP	38.100	25.40	25.40	14.63	53.40	57.80	33.20	6.0/4.8	160.0/36364	7.10
28BNP	44.450	27.94	30.99	15.90	65.10	69.50	36.70	7.5/6.0	200.00/45455	8.50
32BNP	50.800	29.21	30.99	17.81	66.00	71.00	42.00	7.0/6.0	250.00/56818	10.25

* Straight side plates

* bush chain: d1 in the table indicaties the external diameter of the bush.

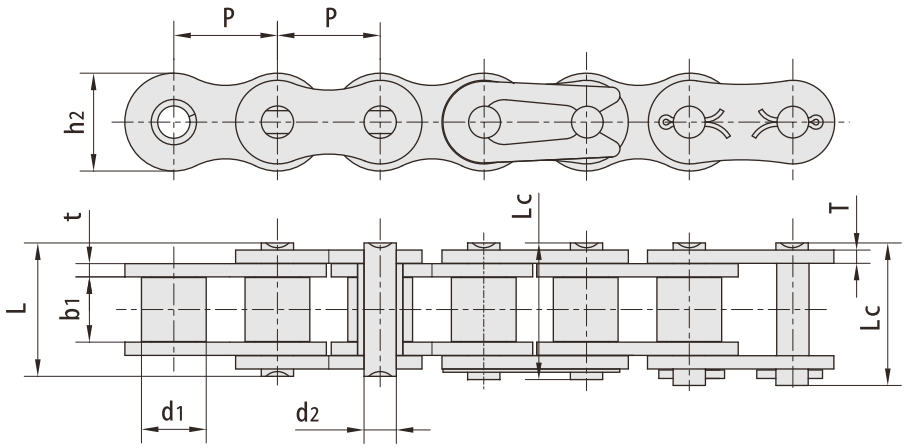

RBL chain number	Pitch	Roller diameter	Width between inner plates	Pin diameter	Pin length		Inner plate depth	Plate thickness	Breaking load	Weight
	P mm	d1 mm	b1 mm	d2 mm	L max mm	Lc max mm	h2 mm	T mm	Q min kN/lbf	q kg/m
*25DR	6.350	3.30	3.18	2.31	7.90	8.40	6.00	0.80	3.50/795	0.15
*35DR	9.525	5.08	4.77	3.58	12.40	13.17	9.00	1.30	7.90/1795	0.33
41DR	12.700	7.77	6.25	3.58	13.75	15.00	9.91	1.30	6.67/1516	0.41
40DR	12.700	7.95	7.85	3.96	16.60	17.80	12.00	1.50	14.10/3205	0.62
5ODR	15.875	10.16	9.40	5.08	20.70	22.20	15.09	2.03	22.20/5045	1.02
60DR	19.050	11.91	12.57	5.94	25.90	27.70	18.00	2.42	31.80/7227	1.50
80DR	25.400	15.88	15.75	7.92	32.70	35.00	24.00	3.25	56.70/I2886	2.60
100DR	31.750	19.05	18.90	9.53	40.40	44.70	30.00	4.00	88.50/20114	3.91
120DR	38.100	22.23	25.22	11.10	50.30	54.30	35.70	4.80	127.00/28864	5.62
140DR	44.450	25.40	25.22	12.70	54.40	59.00	41.00	5.60	172.40/39182	7.50
160DR	50.800	28.58	31.55	14.27	64.80	69.60	47.80	6.40	226.80/51545	10.10
04BDR	6.000	4.00	2.80	1.85	6.80	7.80	5.00	0.60	3.00/682	0.11
05BDR	8.000	5.00	3.00	2.31	8.20	8.90	7.10	0.80	5.00/1136	0.20
#06BDR	9.525	6.35	5.72	3.28	13.15	14.10	8.20	1.30	9.00/2045	0.41
08BDR	12.700	8.51	7.75	4.45	16.70	18.20	11.80	1.60	18.00/4091	0.69
10BDR	15.875	10.16	9.65	5.08	19.50	20.90	14.70	1.70	22.40/5091	0.93
12BDR	19.050	12.07	11.68	5.72	22.50	24.20	16.00	1.85	29.00/6591	1.15
16BDR	25.400	15.88	17.02	8.28	36.10	37.40	21.00	4.15/3.1	60.00/13636	2.71
20BDR	31.750	19.05	19.56	10.19	41.30	45.00	26.40	4.5/S.5	95.00/21591	3.70
24BDR	38.100	25.40	25.40	14.63	53.40	57.80	33.20	6.0/4.8	160.00/36364	7.10
28BDR	44.450	27.94	30.99	15.90	65.10	69.50	36.70	7.5/6.0	200.00/45455	8.50
32BDR	50.800	29.21	30.99	17.81	66.00	71.00	42.00	7.0/6.0	250.00/56818	10.25

* Straight side plates

* bush chain: d1 in the table indicaties the external diameter of the bush.

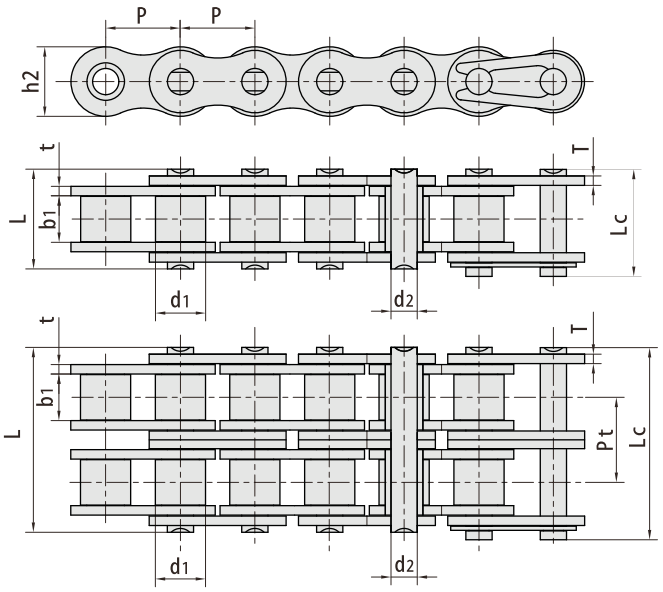

RBL chain number	Pitch	Roller diameter	Width between inner plates	Pin diameter	Pin length		Inner plate depth	Plate thickness	Transverse pitch	Tensile strength	Weight
	P mm	d1 mm	b1 mm	d2 mm	L max mm	Lc max mm	h2 mm	T mm	Pt mm	Q min kN/lbf	q kg/m
40HSLR	12.700	7.95	7.85	3.96	18.80	19.9	12.00	2.03	-	13.8/3102	0.78
40HSLR-2	12.700	7.95	7.85	3.96	35.50	36.7	12.00	2.03	16.55	27.6/6204	1.55
40HSLRF1	12.700	7.92	7.85	3.96	17.70	18.9	11.70	2.03/1.5	-	15.7/3529	0.71
50SLR	15.875	10.16	9.40	5.08	20.70	22.2	15.09	2.03	-	22.0/5045	1.02
50SLR-2	15.875	10.16	9.40	5.08	38.90	40.4	15.09	2.03	18.11	44.4/10091	2.00
50HSLR-2	15.875	10.16	9.60	5.08	42.00	43.1	15.09	2.42	19.70	43.6/9801	2.50
#C 50SLR	15.875	10.16	9.40	5.08	20.70	22.2	15.09	2.03	-	21.8/4901	1.21
60SLR	19.050	11.91	12.57	5.94	27.50	29.3	18.00	3.25/2.42	-	34.2/7772	1.65
60SLR-2	19.050	11.91	12.57	5.94	50.30	52.1	18.00	2.42	22.78	68.4/15544	3.21
12ASLR-3	19.050	11.91	12.57	5.94	71.50	73.3	18.00	2.42	22.78	93.4/20996	4.57
60HSLR	19.050	11.91	12.57	5.94	29.20	31.0	18.00	3.25	-	31.8/7227	1.95
60HSLR-2	19.050	11.91	12.57	5.94	55.30	57.1	18.00	3.25	26.11	63.6/14297	3.74
#C60SLR	19.050	11.91	12.57	5.94	25.90	27.7	18.20	2.42	-	31.8/7227	1.83
'C60SLR-2	19.050	11.91	12.57	5.94	48.80	50.5	18.20	2.42	22.78	66.3/14904	3.56
80SLR	25.400	15.88	15.75	7.92	32.70	35.0	24.00	3.25	-	56.7/12886	2.60
80SLR-2	25.400	15.88	15.75	7.92	62.70	64.3	24.00	3.25	29.29	113.4/25773	5.15
80HSLR	25.400	15.88	15.75	7.92	36.20	38.9	24.00	4.00	-	56.7/12886	3.03
#C80SLR	25.400	15.88	15.75	7.92	32.70	35.0	24.00	3.25	-	56.7/12886	3.10
100SLR	31.750	19.05	18.90	9.53	40.40	44.7	30.00	4.00	-	86.7/19699	3.94
100SLR-2	31.750	19.05	18.90	9.53	76.40	80.5	30.00	4.00	35.76	173.4/39399	7.89
#C 20ASLR-2	31.750	19.05	18.90	9.53	76.40	80.5	30.00	4.00	35.76	173.5/39003	9.06
20ASLR-3	31.750	19.05	18.90	9.53	112.20	116.3	30.00	4.00	35.76	261.0/58673	11.87

* Straight side plates

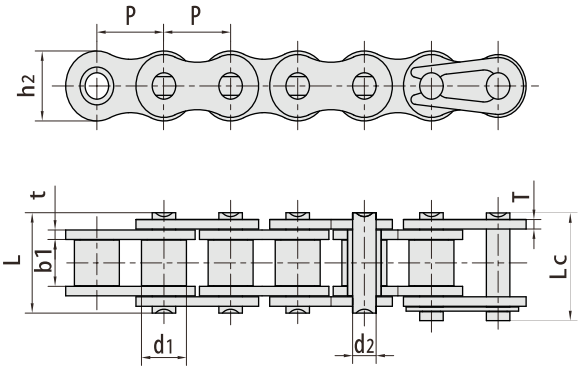

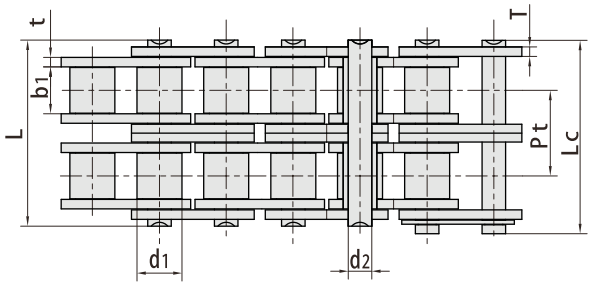

RBL chain number	Pitch	Roller diameter	Width between inner plates	Pin diameter	Pin length		Inner plate depth	Plate thickness	Transverse pitch	Tensile strength	Weight
	P mm	d1 mm	b1 mm	d2 mm	L max mm	Lc max mm	h2 mm	T mm	Pt mm	Q min kN/lbf	q kg/m
08BSLR-2	12.700	8.51	7.75	4.45	31.20	32.2	11.80	1.60	13.92	32.0/7273	1.34
08BSLR-3	12.700	8.51	7.75	4.45	45.10	46.1	11.80	1.60	13.92	44.5/10004	2.07
#C08BSLR	12.700	8.51	7.75	4.45	16.70	18.2	11.80	1.60	-	18.0/4046	0.78
#C08BSLR-2	12.700	8.51	7.75	4.45	31.00	32.2	11.80	1.60	13.92	32.0/7194	1.55
08BSLRF1	12.700	8.51	7.75	4.45	17.30	18.7	11.80	1.60	-	18.0/4091	0.72
10BSLR	15.875	10.16	9.65	5.08	19.50	20.9	14.70	1.70	-	22.4/5091	0.93
10BSLR-2	15.875	10.16	9.65	5.08	36.10	37.5	14.70	1.70	16.59	44.5/10114	1.84
10BSLR-3	15.875	10.16	9.65	5.08	52.70	54.1	14.70	1.70	16.59	66.7/l4994	2.52
*C 10BSLR	15.875	10.16	9.65	5.08	19.50	20.9	14.70	1.70	-	22.4/5089	1.06
#C10BS LR -2	15.875	10.16	9.65	5.08	36.10	37.5	14.70	1.70	16.59	36.5/8205	2.08
10BSLRF1	15.875	10.16	9.65	5.08	19.90	21.6	14.70	1.70	-	22.4/5091	0.97
12BSLR	19.050	12.07	11.68	5.72	22.50	24.2	16.00	1.85	-	29.0/6591	1.15
12BSLR-2	19.050	12.07	11.68	5.72	42.00	43.6	16.00	1.85	19.46	57.8/13136	2.31
12BSLR-3	19.050	12.07	11.68	5.72	61.50	63.1	16.00	1.85	19.46	86.7/19490	3.50
#C12BSLR	19.050	12.07	11.68	5.72	22.90	24.9	16.00	1.85	-	29.0/6589	1.32
#C12BS LR -2	19.050	12.07	11.68	5.72	42.00	43.6	16.00	1.85	19.46	57.8/13136	2.31
12BSLRF1	19.050	12.07	11.68	5.72	22.90	24.7	16.00	1.85	-	29.0/6591	1.19
16BSLR	25.400	15.88	17.02	8.28	36.10	37.4	21.00	4.15/3.1	-	60.0/13636	2.71
16BSLR-2	25.400	15.88	17.02	8.28	68.00	69.3	21.00	4.15/3.1	31.88	106.0/24091	5.42
#C16BS LR	25.400	15.88	17.02	8.28	36.10	39.1	21.00	4.15/3.1	-	60.0/13488	2.92
#C16BSLR-2	25.400	15.88	17.02	8.28	68.00	71.0	21.00	4.15/3.1	31.88	106.0/23829	5.87
#C16BS LR -3	25.400	15.88	17.02	8.28	99.80	102.9	21.00	4.15/3.1	31.88	160.0/35968	8.77
16BSLRF1	25.400	15.88	17.02	8.28	36.70	39.7	21.00	4.15/3.1	-	60.0/l3636	2.73
16BSLRF4	25.400	15.88	17.02	8.28	36.10	39.1	21.00	4.15/3.1	-	60.0/13636	2.77
#C16BF1SLR	25.400	15.88	17.02	8.28	36.10	37.4	24.00	4.15/3.1	-	60.0/l3633	3.38
#C16BSLR F1	25.400	15.88	17.02	8.28	36.70	39.7	21.00	4.15/3.1	-	60.0/13633	2.98
#C16BSLR F2	25.400	15.88	17.02	8.28	36.70	38.2	24.00	4.15/3.1	-	60.0/13633	3.39
24BSLR	38.100	25.40	25.40	14.63	53.40	57.8	33.20	6.0/4.8	-	160.0/35968	7.08
24BSLR-2	38.100	25.40	25.40	14.63	101.70	106.2	33.20	6.0A.8	48.36	319.2/71756	12.43

* Straight side plates

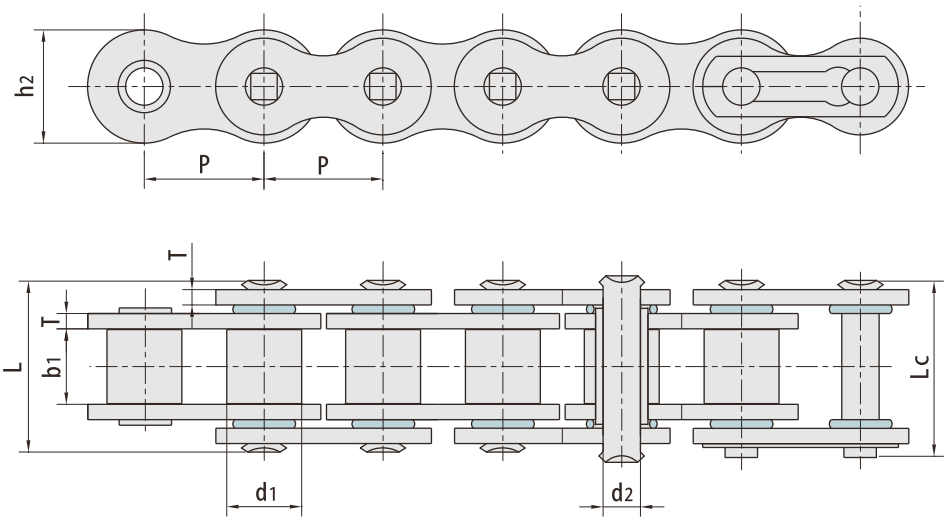

RBL chain number	Pitch	Roller diameter	Width between inner plates	Pin diameter	Pin length		Inner plate depth	Plate thickness	Tensile strength	Average Tensile strength	Weight
	P mm	d1 mm	b1 mm	d2 mm	L max mm	Lc max mm	h2 mm	T mm	Q min kN/lbf	Qo kN	q kg/m
*35 0-R	9.525	5.08	4.77	3.58	14.4	15.5	9.00	1.30	7.9/1776	9.4	0.39
40 0-R	12.700	7.95	7.85	3.96	18.3	19.6	12.00	1.50	14.1/3205	17.5	0.67
50 0-R	15.875	10.16	9.40	5.08	23.1	24.8	15.09	2.03	22.2/5045	29.4	1.19
50H 0-R	15.875	10.16	9.40	5.08	24.7	26.4	15.09	2.42	22.2/4991	26.6	1.18
60 0-R	19.050	11.91	12.57	5.94	28.5	30.4	18.00	2.42	31.8/7227	41.5	1.62
60 0-R F1	19.050	11.91	9.70	5.94	25.5	27.3	18.00	2.42	31.8/7149	38.1	1.49
60H 0-R	19.050	11.91	12.57	5.94	31.7	34.2	18.00	3.25	31.8/7149	38.1	1.97
60HT 0-R	19.050	11.91	12.57	5.94	31.7	33.2	18.00	3.25	45.0/10116	48.0	1.96
80 0-R	25.400	15.88	15.75	7.92	35.6	37.3	24.00	3.25	56.7/12886	69.4	2.70
100 0-R	31.750	19.05	18.95	9.53	43.3	47.0	30.00	4.00	88.5/20114	109.2	3.91
120 0-R	38.100	22.23	25.22	11.11	54.0	57.5	35.70	4.80	127.0/28864	156.3	6.34
160H 0-R	50.800	28.58	31.55	14.27	72.6	77.3	47.80	7.20	222.4/49996	266.8	11.13
200H 0-R	63.500	39.68	37.85	19.85	91.6	98.5	60.00	9.50	347.0/78006	416.4	19.20
#06B 0-R	9.525	6.35	5.72	3.28	14.4	15.6	8.20	1.30	9.0/2023	10.4	0.45
08B 0-R	12.700	8.51	7.75	4.45	18.8	19.9	11.80	1.60	18.0/4091	19.40	0.74
10B 0-R	15.875	10.16	9.65	5.08	22.0	23.3	14.70	1.70	19.0/4271	22.8	1.00
12B 0-R	19.050	12.07	11.68	5.72	24.9	26.8	16.00	1.85	29.0/6519	32.2	1.27
16B 0-R	25.400	15.88	17.02	8.28	39.5	40.9	21.00	4.15/3.1	60.0/13488	72.0	2.85
16BH 0-R	25.400	15.88	17.02	8.90	39.5	40.9	24.10	4.0/3.1	65.0/14612	78.0	3.19
20B 0-R	31.750	19.05	19.56	10.19	44.5	48.5	26.40	4.5/S.5	95.0/21356	106.7	4.04

* Straight side plates

* bush chain: d1 in the table indicaties the external diameter of the bush.

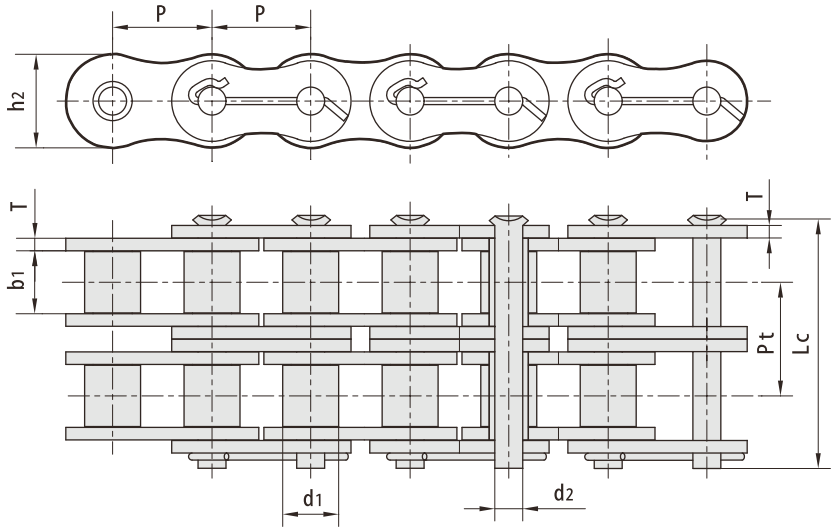

RBL ANSI chain number	Pitch P		Roller diameter d1	Width between inner plates b1	Pin diameter d2	Pin length L max	Inner plate depth h2	Plate thickness T	Transverse pitch	Tensile strength Q min	Weight
	mm	inch	mm	mm	mm	mm	mm	mm	mm	kN/lbf	kg/m
80	25.400	1	15.88	15.75	7.92	37.55	24.1	3.25	-	55.60/12500	2.60
100	31.750	1 1/4	19.05	18.90	9.53	44.30	30.0	4.00	-	86.87/19500	3.91
120	38.100	1 1/2	22.23	25.22	11.10	54.40	36.2	4.80	-	125.10/28100	5.62
140	44.450	1 3/4	25.40	25.22	12.70	59.00	42.2	5.60	-	170.27/38300	7.50
160	50.800	2	28.58	31.55	14.27	69.60	48.2	6.40	-	222.40/50000	10.10
180	57.150	2 1/4	35.71	35.48	17.46	78.60	54.3	7.20	-	281.47/63300	13.45
200	63.500	2 1/2	39.68	37.85	19.85	87.20	60.3	8.00	-	347.50/78100	16.15
80-2	25.400	1	15.88	15.75	7.92	66.80	24.1	3.25	29.29	111.20/25000	5.15
100-2	31.750	1 1/4	19.05	18.90	9.53	80.50	30.1	4.00	35.76	173.74/39000	7.80
120-2	38.100	1 1/2	22.23	25.22	11.10	99.70	36.2	4.80	45.44	250.20/56200	11.70
140-2	44.450	1 3/4	25.40	25.22	12.70	107.80	42.2	5.60	48.87	340.54/76600	15.14
160-2	50.800	2	28.58	31.55	14.27	127.50	48.2	6.40	58.55	444.80/100000	20.14
180-2	57.150	2 1/4	35.71	35.48	17.46	144.40	54.3	7.20	65.84	562.94/126600	29.22
200-2	63.500	2 1/2	39.68	37.85	19.85	158.80	60.3	8.00	71.55	695.00/156200	32.24
80-3	25.400	1	15.88	15.75	7.92	96.10	24.1	3.25	29.29	166.80/37500	7.89
100-3	31.750	1 1/4	19.05	18.90	9.53	116.30	30.1	4.00	35.76	260.61/58500	11.77
120-3	38.100	1 1/2	22.23	25.22	11.10	145.20	36.2	4.80	45.44	375.30/84300	17.53
140-3	44.450	1 3A	25.40	25.22	12.70	156.80	42.2	5.60	48.87	510.81/114900	22.20
160-3	50.800	2	28.58	31.55	14.27	186.60	48.2	6.40	58.55	667.20/150000	30.02
180-3	57.150	2 1/4	35.71	35.48	17.46	210.20	54.3	7.20	65.84	844.41/189900	38.22
200-3	63.500	2 1/2	39.68	37.85	19.85	230.40	60.3	8.00	71.55	1042.50/234300	49.03
200H-3	63.500	2 1/2	39.68	37.85	19.85	249.60	60.3	9.50	78.31	1042.50/234300	56.74

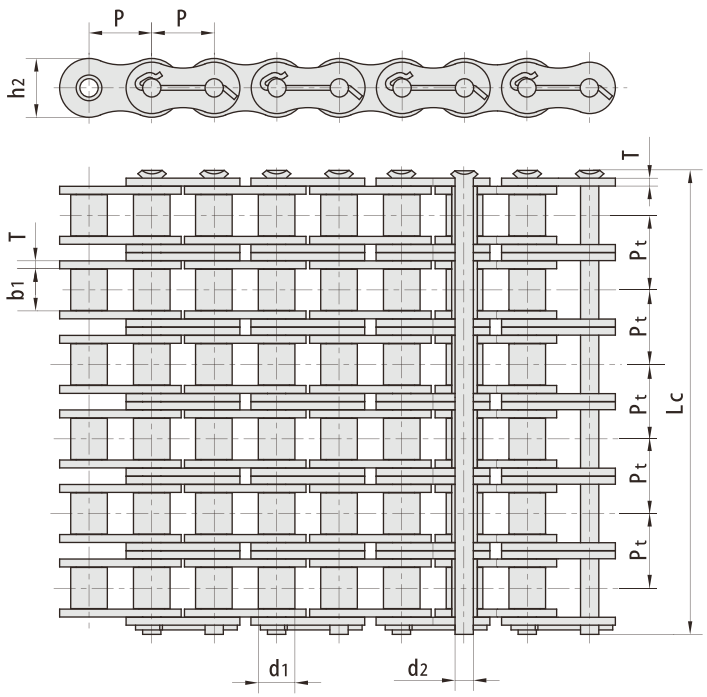

RBL ANSI chain number	Pitch P mm	Pitch P inch	Roller diameter d1 mm	Width between inner plates b1 mm	Pin diameter d2 mm	Pin length L max mm	Inner plate depth h2 mm	Plate thickness T mm	Transverse pitch Pt mm	Tensile strength Q min kN/lbf	Weight kg/m
80-4	25.400	1	15.88	15.75	7.92	122.9	24.1	3.25	29.29	222.40/50000	10.24
100-4	31.750	1 1/4	19.05	18.90	9.53	151.5	30.1	4.00	35.76	347.48/78000	15.39
120-4	38.100	1 1/2	22.23	25.22	11.10	190.6	36.2	4.80	45.44	500.40/112400	22.19
140-4	44.450	1 3/4	25.40	25.22	12.70	205.7	42.2	5.60	48.87	681.08/153200	29.63
160-4	50.800	2	28.58	31.55	14.27	245.2	48.2	6.40	58.55	889.60/200000	39.94
200-4	63.500	2 1/2	39.68	37.85	19.85	302.0	60.3	8.00	71.55	1390.00/312400	63.60
80-5	25.400	1	15.88	15.75	7.92	152.2	24.1	3.25	29.29	278.00/62500	12.79
100-5	31.750	1 1A	19.05	18.90	9.53	187.8	30.1	4.00	35.76	434.35/97500	19.22
120-5	38.100	1 1/2	22.23	25.22	11.10	236.1	36.2	4.80	45.44	625.50/140500	27.71
140-5	44.450	1 3/4	25.40	25.22	12.70	254.6	42.2	5.60	48.87	851.35/193486	39.20
160-5	50.800	2	28.58	31.75	14.27	303.3	48.2	6.40	58.55	1112.00/252724	52.40
80-6	25.400	1	15.88	15.75	7.92	181.5	24.1	3.25	29.29	333.60/75000	15.34
100-6	31.750	1 1/4	19.05	18.90	9.53	223.6	30.1	4.00	35.76	521.22/117000	23.05
120-6	38.100	1 1/2	22.23	25.22	11.10	281.6	36.2	4.80	45.44	750.60/168600	33.24
140-6	44.450	1 3/4	25.40	25.22	12.70	303.4	42.2	5.60	48.87	1021.62/229800	44.38
160-6	50.800	2	28.58	31.55	14.27	362.3	48.2	6.40	58.55	1334.40/300000	59.83
200-6	63.500	2 1/2	39.68	37.85	19.85	445.0	60.3	8.00	71.55	2085.00/468600	95.23
80-8	25.400	1	15.88	15.75	7.92	240.1	24.1	3.25	29.29	444.80/100000	20.44
100-8	31.750	1 1/4	19.05	18.90	9.53	295.1	30.1	4.00	35.76	694.96/156000	30.71
120-8	38.100	1 1/2	22.23	25.22	11.10	372.4	36.2	4.80	45.44	1000.80/224800	44.28
140-8	44.450	1 3/4	25.40	25.22	12.70	401.1	42.2	5.60	48.87	1362.16/309578	62.21

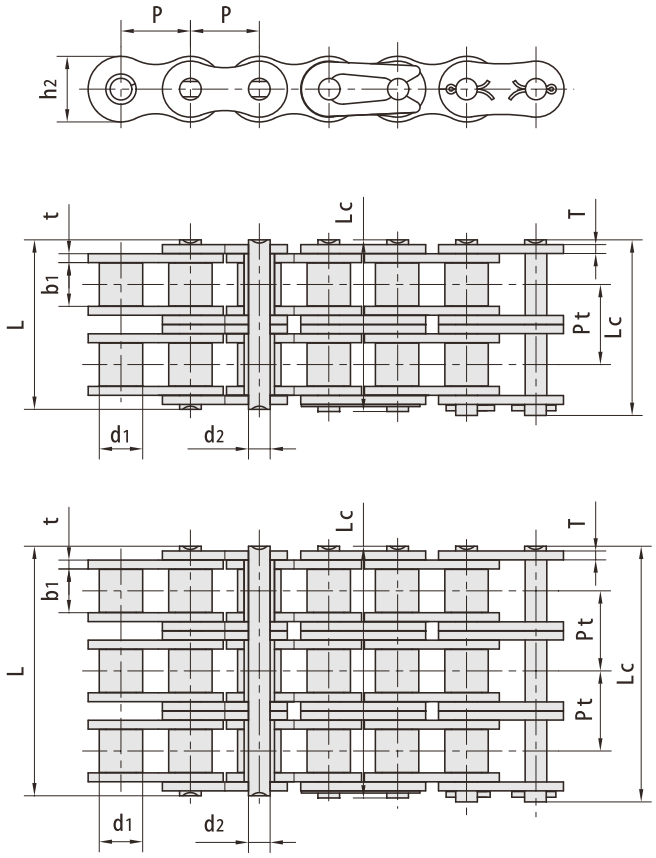

RBL chain number	Pitch	Roller diameter	Width between inner plates	Pin diameter	Pin length		Inner plate depth	Plate thickness	Transverse pitch	Tensile strength	Dynamic load strength	Weight
	P mm	d1 max mm	b1 min mm	d2 max mm	L max mm	Lc max mm	h2 max mm	t/T max mm	Pt mm	Q m h kN/bf	Fd min kN	q kg/n
16A (FQ)-1	25.40	15.88	15.75	7.92	32.70	36.50	24.00	3.25	-	56.7/l2746	9.55	2.60
16A (FQ)-2	25.40	15.88	15.75	7.92	62.70	6530	24.00	3.25	29.29	113.4/25492	12.80	5.51
16A (FQ)-3	25.40	15.88	15.75	7.92	91.70	94.60	24.00	3.25	29.29	170.1/38238	19.20	7.89
16B (FQ)-1	25.40	15.88	17.02	8.28	36.10	39.10	21.00	4.15/3.10	-	60.0/13488	12.50	2.71
16B (FQ)-2	25.40	15.88	17.02	8.28	68.00	71.00	21.00	4.15/3.10	31.88	127.5/28662	19.00	5.42
20A (FQ)-2	31.75	19.05	18.90	9.53	76.40	80.50	30.00	4.00	35.76	174.0/39115	19.56	7.80
20A(FQ)-3	31.75	19.05	18.90	9.53	112.20	11630	30.00	4.00	35.76	261.0/58673	29.35	11.77
20B (FQ)-1	31.75	19.05	19.56	10.19	4130	45.00	26.40	4.50/3.50	-	95.0/21356	13.50	3.70
20B (FQ)-2	31.75	19.05	19.56	10.19	7730	81.50	26.40	4.50/3.51	36.45	195.0/43836	30.00	7.20
24A(FQ)-2	38.10	22.23	25.22	11.10	9530	99.70	35.70	4.80	45.44	284.0/63843	46.00	11.70
24B (FQ)-2	38.10	35.40	25.40	14.63	101.70	106.20	33.20	6.00/4.80	48.36	280.0/62944	26.40	14.07
24B (FQ)-3	38.10	35.40	25.40	14.63	150.10	154.60	33.20	6.00/4.81	48.36	425.0/95540	39.60	21.07
28A(FQ)-2	44.45	25.40	25.22	12.70	10330	107.90	41.00	5.60	48.87	380.0/85424	69.00	15.10

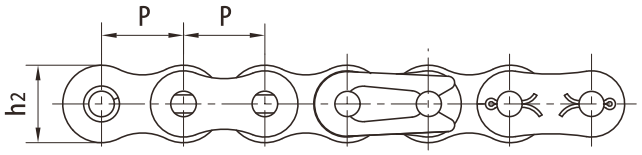

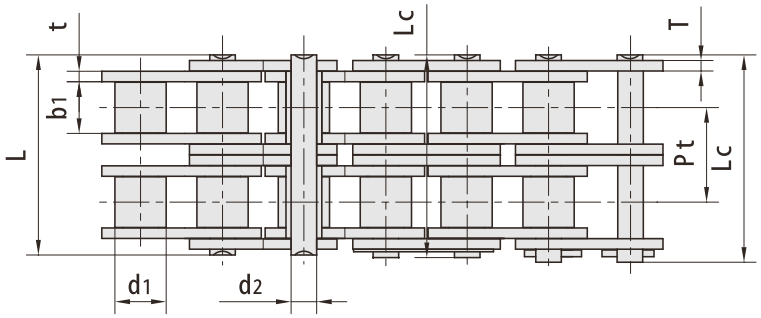

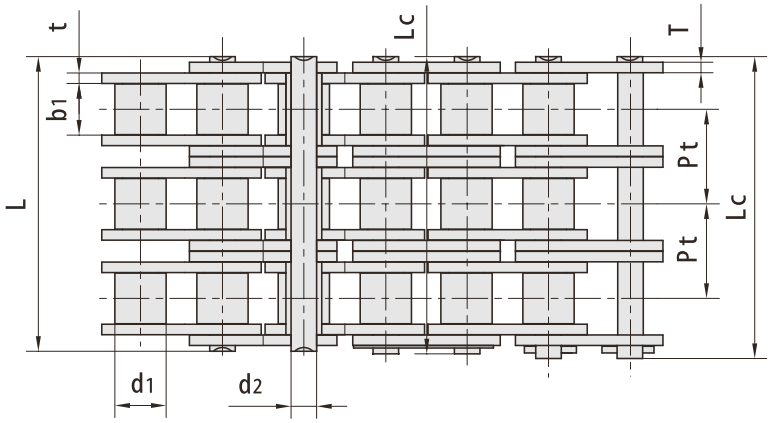

RBL chain number	Pitch	Roller diameter	Width between inner plates	Pin diameter	Pin length		Inner plate depth	Plate thickness	Transverse pitch	Tensile strength	Average Tensile strength	Weight
	P mm	d1 max mm	b1 min mm	d2 max mm	L max mm	Lc max mm	h2 max mm	t/T max mm	Pt mm	Q m h kN/bf	Qo kN	q kg/n
16AFT-1	25.40	15.88	15.75	7.92	32.70	35.00	24.00	3.25	-	70.56/15861	82.50	8.80
16AFT-2	25.40	15.88	15.75	7.92	62.70	65.80	24.00	3.25	29.29	132.30/29741	165.40	5.51
16AFTZ-3	25.40	15.88	15.75	7.92	91.70	95.10	24.00	3.25	29.29	232.50/52266	255.90	8.18
20AFT-2	31.75	19.05	18.90	9.53	76.40	80.50	30.10	4.00	35.76	220.00A9456	262.50	8.09
20AFT-3	31.75	19.05	18.90	9.53	11220	11630	30.10	4.00	35.76	330.00/74184	395.00	12.10
24AFTZ-2	38.10	22.23	25.22	11.10	95.80	99.70	36.20	4.80	45.44	339.00/76210	373.00	12.60
24AFTZ-3	38.10	22.23	25.22	11.10	141.40	14520	36.20	4.80	45.44	520.00/116896	573.00	18.90
28AFTZ-2	44.45	25.40	25.22	12.70	10330	107.90	42.20	5.60	48.87	445.50/100148	490.00	16.35

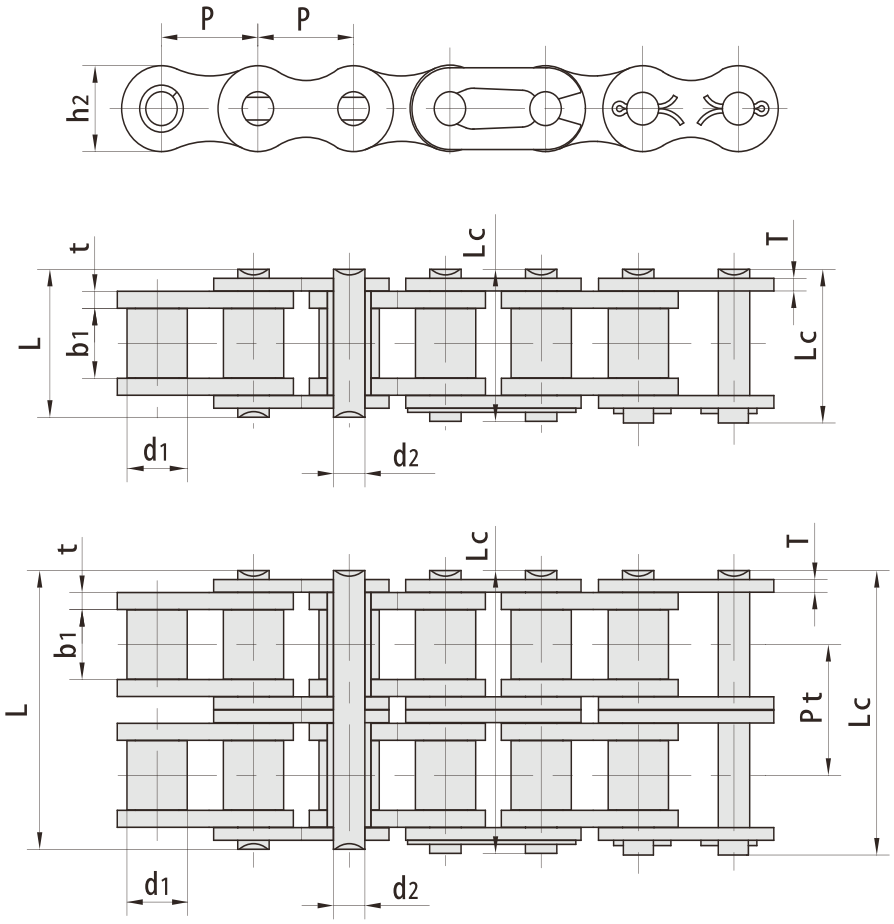

RBL chain number	Pitch	Roller diameter	Width between inner plates	Pin diameter	Pin length		Inner plate depth	Plate thickness	Transverse pith	Tensile strength	Dynamic load strength	Weight
	P mm	b1 max mm	b1 min mm	d2 max mm	L max mm	Lc max mm	h2 max mm	t/T max mm	Pt mm	Q min kN/bf	Fd min kN	q kg/m
16ASLR fQ)-2	25.40	15.88	15.75	7.92	62.70	6530	24.00	3.25	29.29	111.2/24998	12.80	5.21
16BSLR fQ)-1	25.40	15.88	17.02	8.28	36.10	39.10	21.00	4.15/3.10	-	72.0/16185	12.50	2.69
16BSLR (FQ)-2	25.40	15.88	17.02	8.28	68.00	71.00	21.00	4.15/3.10	31.88	149.5/33607	19.00	5.48
20BSLR (FQ)-2	31.75	19.05	19.56	10.19	7730	8130	26.40	4.50/3.51	36.45	200.0/44860	30.00	8.04
24ASLR fQ)-2	38.10	22.23	25.22	11.10	9530	99.70	35.70	4.80	45.44	284.0/63843	46.00	11.82
24BSLR fQ)-2	38.10	35.40	25.40	14.63	101.70	10620	33.20	6.00/4.80	48.36	319.2/71756	37.20	12.43
28ASLR fQ)-2	44.45	25.40	25.22	12.70	10330	107.90	41.00	5.60	48.87	380.0/85424	69.00	14.80

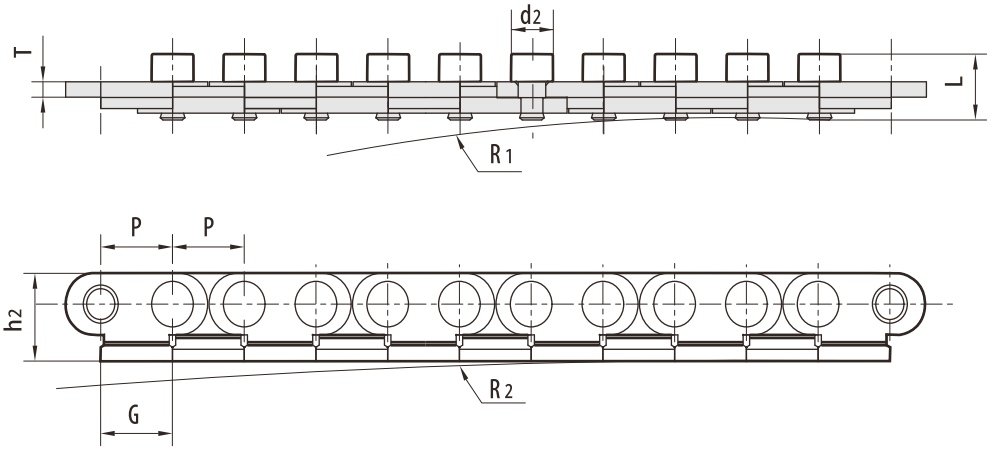

RBL chain number	Pitch	Pin diameter	Pin length	Plate thickness			Side bow radius		Weight
	P mm	d2 max mm	L max mm	h2 max mm	G max mm	T max mm	R1 mm	R2 mm	q kg/m
P12.75SB	12.75	7.4	10.65	14.25	12.8	2.5	500/800	1000	0.69
P12.75SBF1	12.75	7.4	11.00	14.25	12.8	2.5	500/800	1000	1.08

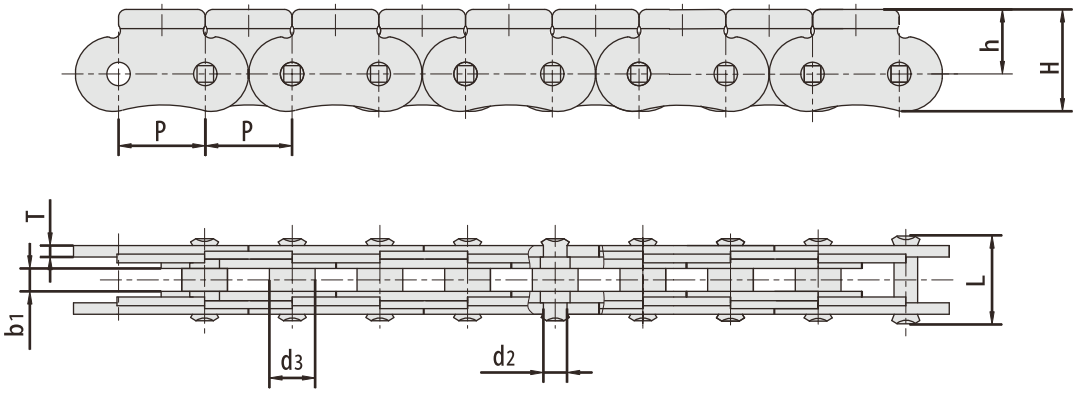

RBL chain number	Pitch	Width between inner plates	Pin diameter		Pin length	Plate dimension			Tensile strength
	P mm	bmmin mm	d2 max mm	d3 max mm	L max mm	H max mm	h mm	T mm	Q min kN/bf
P11.5	11.5	3.00	3.00	6.00	10.8	13.5	8.5	1.5	9.0/2023

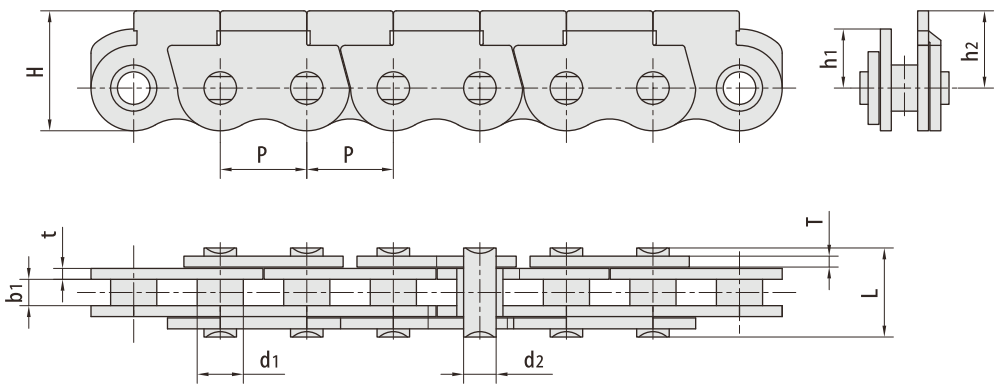

RBL chain number	Pitch	Bush diameter	Width between inner plates	Pin diameter	Pin length	Plate dimension				Tensile strength	Weight
	P	d1 max	b1 min	d2 max	L max	H max	h1	h2	t/T	Q min	q
	mm	mm	mm	mm	mm	mm	mm	mm	mm	kN/bf	kg/m
06CF25SB	9.525	5.08	2.90	3.58	9.8	13.2	6.5	8.5	1.2	7.0/1574	0.41
06CF37SB	9.525	5.08	2.90	3.58	8.6	13.2	6.5	8.5	1.0	5.8/1304	0.35

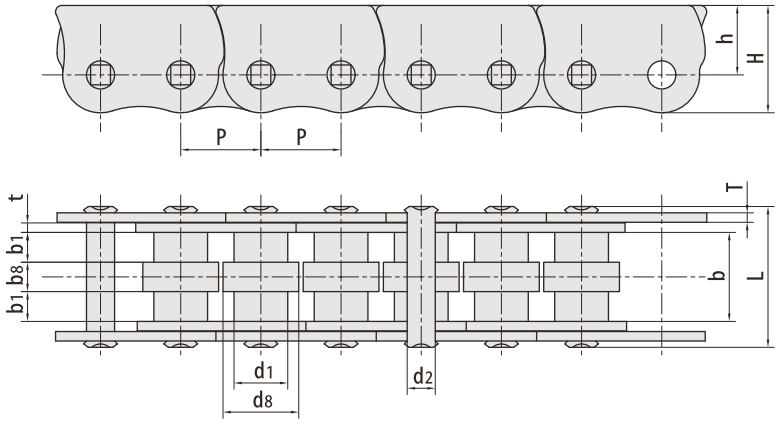

RBL chain number	Pitch	Roller diameter				Width between inner plates	Pin diameter	Pin length	Plate dimension			Tensile strength	Weight
	P	b1 max	d8 max	b1 min	b8 min	b1 min	d2 max	L max	H max	h	t/T	Q min	q
	mm	mm	mm	mm	mm	mm	mm	mm	mm	mm	mm	kN/bf	kg/m
08BF200	12.700	8.51	12.00	4.40	4.60	13.80	4.45	22.7	17.0	11.0	1.5	13.8/3102	1.70

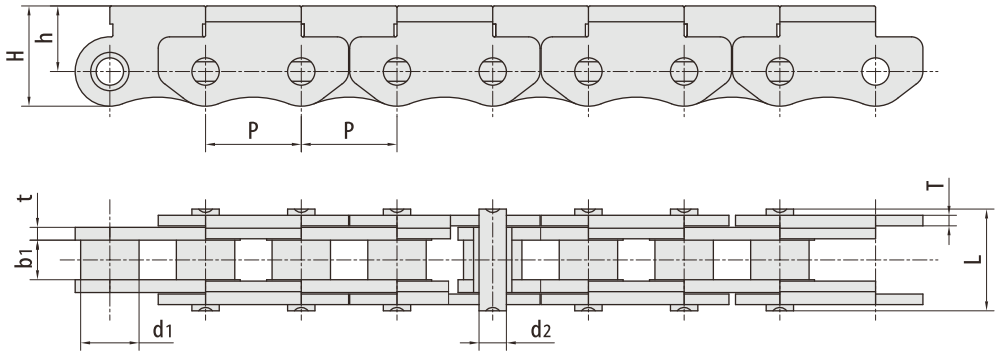

RBL chain number	Pitch	Roller diameter	Width between inner plates	Pin diameter	Pin length	Plate dimension			Tensile strength	Weight
	P	b1 max	b1 min	d2 max	L max	H max	h	t/T	Q min	q
	mm	mm	mm	mm	mm	mm	mm	mm	kN/bf	kg/m
P12.7SB	12.700	7.75	5.25	3.58	13.5	13.3	8.7	1.7/l.4	10.0/2248	0.59
P12.7F5SB	12.700	7.75	3.80	3.58	13.1	13.3	8.7	1.7/1.4	10.0/2248	0.55

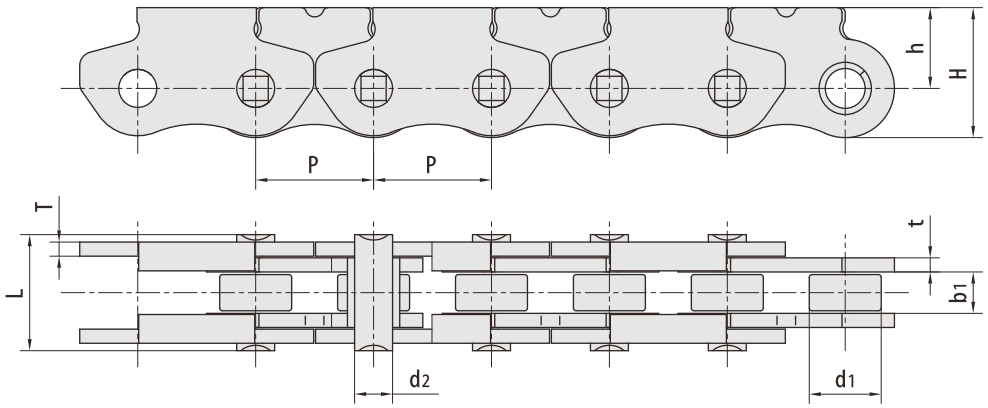

RBL chain number	Pitch	Roller diameter	Width between inner plates	Pin diameter	Pin length	Plate dimension			Tensile strength	Weight
	P	b1 max	b1 min	d2 max	L max	H max	h	t/T	Q min	q
	mm	mm	mm	mm	mm	mm	mm	mm	kN/bf	kg/m
P12.7F10SB	12.700	7.75	4.10	4.09	12.5	13.8	8.7	1.5	8.2/1843	0.62

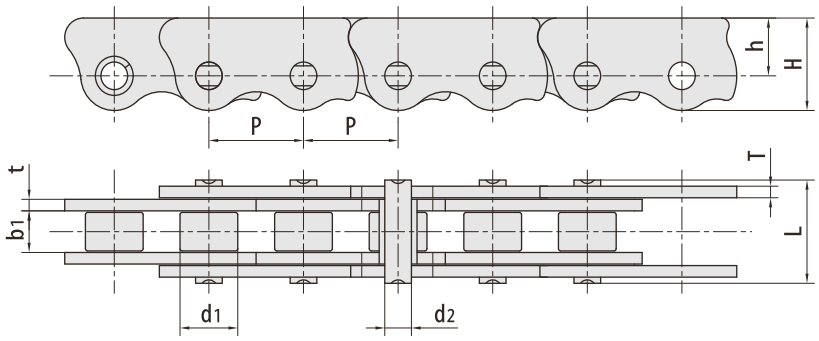

RBL chain number	Pitch	Roller diameter	Width between inner plates	Pin diameter	Pin length	Plate dimension			Tensile strength	Weight
	P mm	b1 max mm	b1 min mm	d2 max mm	L max mm	H max mm	h mm	t/T mm	Q min kN/bf	q kg/m
P12.7F12	12.700	7.75	5.25	3.58	13.4	12.0	7.5	1.5	10.0/2248	0.68

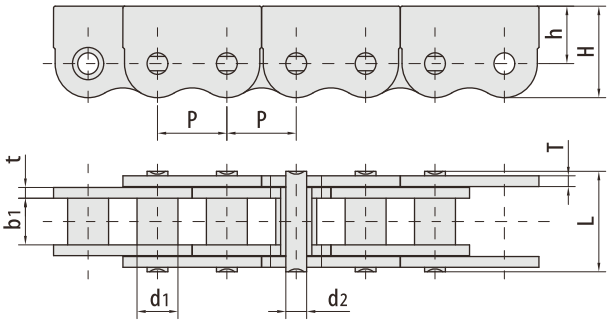

RBL chain number	Pitch	Roller diameter	Width between inner plates	Pin diameter	Pin length	Plate dimension			Tensile strength	Weight
	P mm	b1 max mm	b1 min mm	d2 max mm	L max mm	H max mm	h mm	t/T mm	Q min kN/bf	q kg/m
P20SB	20.000	11.80	13.00	6.00	28.0	25.5	16.0	3.0	36.0/8093	2.78

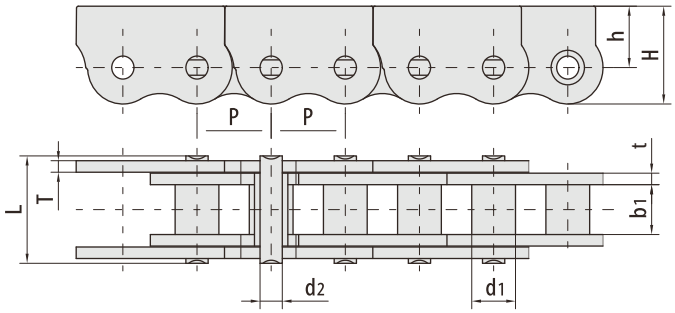

RBL chain number	Pitch	Roller diameter	Width between inner plates	Pin diameter	Pin length	Plate dimension			Tensile strength	Weight
	P mm	b1 max mm	b1 min mm	d2 max mm	L max mm	H max mm	h mm	t/T mm	Q min kN/bf	q kg/m
P20SBF1	20.000	11.80	13.00	6.00	28.0	25.5	16.0	3.0	36.0/8093	2.79

Side bow chains

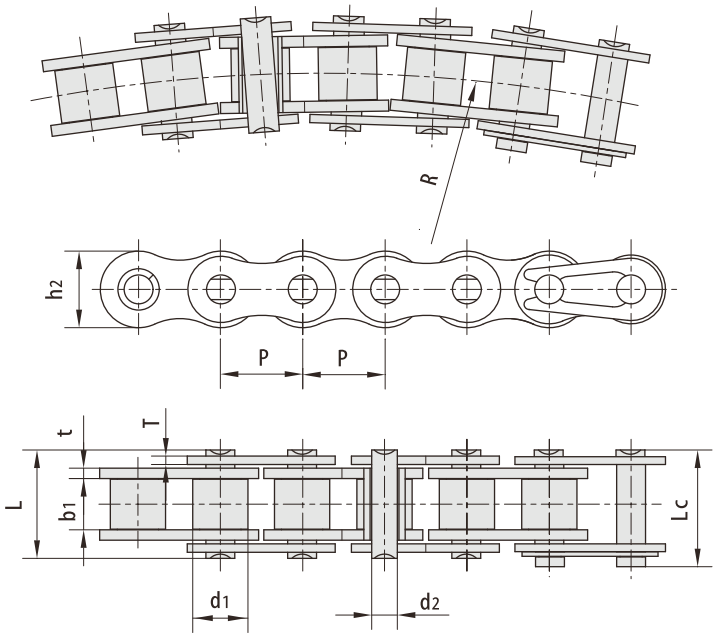

RBL chain number	Pitch	Roller diameter	Width between inner plates	Pin diameter	Pin length		Inner plate depth	Plate thickness	Side bow radius	Tensile strength	Average Tensile strength	Weight
	P mm	d1 max mm	b1 min mm	d2 max mm	L max mm	Lc max mm	h2 max mm	t/T max mm	R mm	Q min kN/bf	Qo kN	q kg/m
40SB	12.700	7.95	7.85	3.96	16.9	18.1	11.7	1.50	350	13.8/3136	15.20	0.80
43SB	12.700	7.95	7.85	3.45	18.3	19.5	11.7	1.50	305	12.0/2727	13.20	0.64
50SB	15.875	10.16	9.40	4.37	20.7	22.7	14.9	2.03	400	20.6/4681	22.70	1.09
60SB	19.050	11.91	12.57	5.34	26.6	28.4	18.0	2.42	500	15.7/3568	17.30	1.54
63SB	19.050	11.91	12.68	5.08	28.8	30.6	17.2	2.42/2.03	350	12.5/2840	20.00	1.40
80SB	25.400	15.88	15.75	7.19	34.0	37.3	24.0	3.25	711	40.9/9201	42.00	2.60
#06BSB Fl	9.525	6.35	5.72	3.05	13.5	15.0	8.2	1.30	300	8.0/1818	8.80	0.60
08BSB	12.700	8.51	7.75	3.97	17.4	18.7	11.8	1.60	400	14.0/3182	15.40	0.70
08BSBF1	12.700	8.51	7.75	3.97	16.3	17.6	11.8	1.6/1.2	400	12.8/2909	14.10	0.65
10BSB	15.875	10.16	9.65	4.50	20.1	21.5	14.7	1.70	400	15.6/3545	17.20	0.93
12BSB	19.050	12.07	11.68	5.12	23.1	24.8	16.0	1.85	500	20.5/4658	22.60	1.16
16BSB	25.400	15.88	17.22	7.90	36.5	39.7	21.0	3.7/3.0	500	55.6/12635	64.00	2.53
16BSBF3	25.400	15.88	17.02	7.85	36.2	38.9	21.0	3.8/3.0	1260	55.6/l2635	64.00	2.73
#C24BSB	38.100	25.40	25.50	14.00	54.3	58.5	33.2	6.0/4.8	2000	160.0/35968	176.00	7.46
#C20505B	31.750	10.16	9.40	5.08	21.3	22.6	15.0	2.03	800	21.8/4954	24.00	0.84
#C 2060SBF1	38.100	11.91	12.57	5.08	26.8	28.8	18.0	2.42	800	21.8/4954	24.00	1.17
#C 2062F6SB	38.100	22.23	12.57	5.34	26.6	29.0	23.0	2.42	1100	15.7/3568	17.30	2.27

Straight side plate

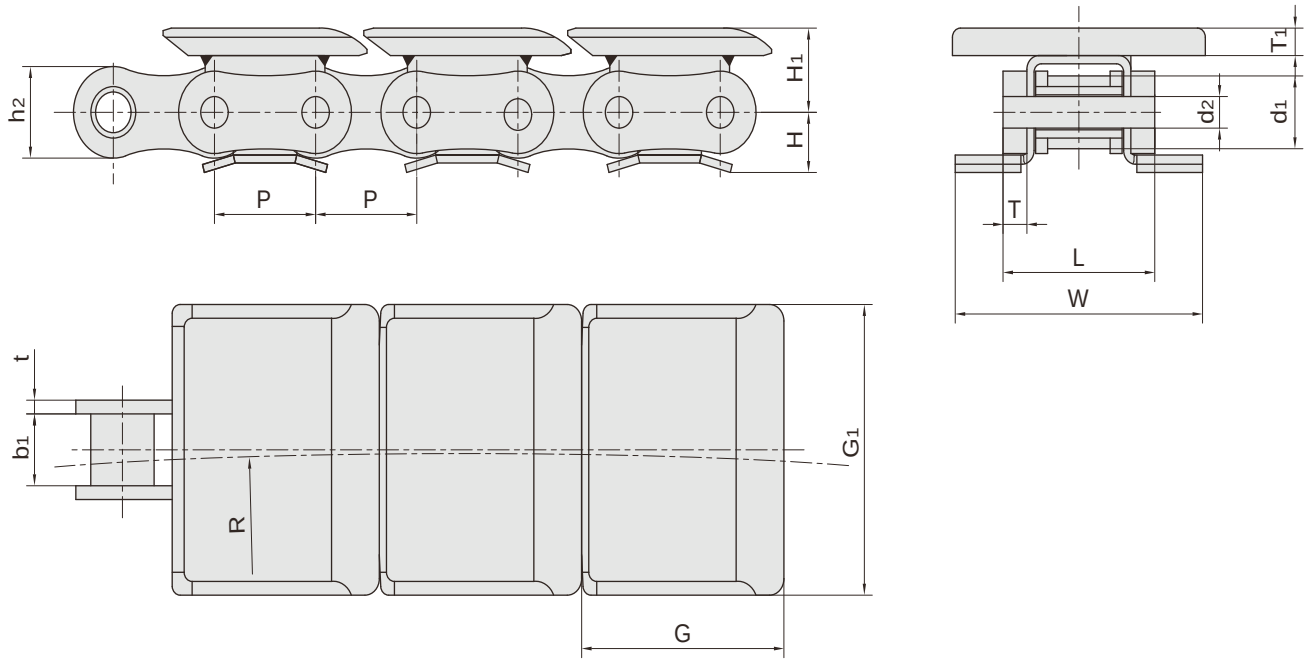

RBL chain number	Pitch	Roller diameter	Width between inner plates	Pin diameter	Pin length	Inner plate depth	Attachment dimension							Side bow radius
	P mm	d1 mm	b1 mm	d2 mm	L mm	h2 mm	H mm	H1 mm	T/t mm	T1 mm	G mm	G1 mm	W mm	R mm
43SBF11	12.7	7.95	7.85	3.45	19.6	9.8	6.9	9.2	1.5/2.8	3	25.7	31.75	31.6	254
43SBF12	12.7	7.95	7.85	3.45	19.6	9.8	6.9	9.2	1.5/2.8	3	25.7	36.00	31.6	254
43SBF13	12.7	7.95	7.85	3.45	19.6	9.8	6.9	9.2	1.5/2.8	3	25.7	64.00	31.6	254

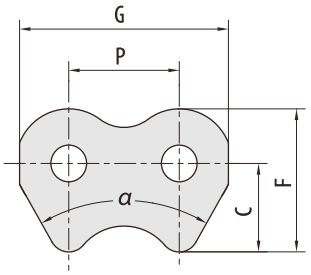

RBL chain number	P mm	G mm	C mm	F mm	a
08BSBF5	12.7	24.0	9.9	16.0	60°

RBL chain number	P mm	G mm	C mm	F mm
43SBF14	12.700	23.1	9.5	11.40
40SBF4	12.700	24.40	3.30	8.26
50SBF2	15.875	28.0	5.0	8.56
10BSBF3-2STC	15.875	29.58	4.75	12.00

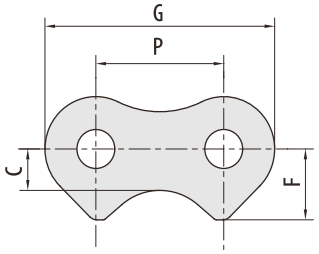

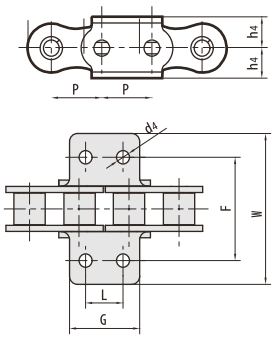

RBL chain number	P mm	G mm	L mm	F mm	W mm	h4 mm	d4 mm
40SBF1	12.7	17.8	9.5	30.2	45.5	7.5	3.3
08BSBF7KK2	12.7	22.4	12.7	27.4	42.0	8.9	4.5

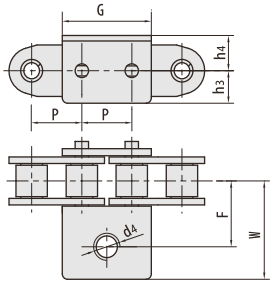

RBL chain number	P mm	G mm	F mm	W mm	h3 mm	h4 mm	d4 mm
63SBF2	19.05	33.9	24.4	36.4	12.0	13.0	M 8

RBL chain number	P mm	G mm	F mm	W mm	T mm	h4 mm	d4 mm
08BSBA1F1	12.700	11.50	27.00	38.0	1.60	8.65	5.3
08BSBK1	12.700	18.10	25.40	39.6	1.60	8.00	6.0
40SBA1F3	12.700	9.50	38.00	50.0	1.50	8.0	4.2
40SBA1F4	12.700	18.10	27.40	39.4	1.50	8.0	4.2
40SBF6	12.700	18.00	26.40	42.4	1.50	9.00	4.2
40SBK1	12.700	9.50	25.40	35.2	1.50	7.90	3.4
43SBA1F1	12.700	9.50	25.40	35.2	1.50	7.9	3.4
10BA1F3SB	15.875	13.00	32.40	51.2	1.70	10.5	6.0
10BA1F5SB	15.875	14.29	31.80	46.2	1.70	10.3	6.0
50SBA1	15.875	12.70	31.75	46.2	2.03	10.3	5.5
60SBK1	19.050	15.90	38.10	56.3	2.42	11.9	5.5
C2050SBK0F1	31.750	12.70	-	43.6	2.03	7.4	-
C2050SBK0F2	31.750	15.00	-	35.0	2.03	7.4	-
C2050SBK1	31.750	23.80	31.80	44.6	2.03	11.1	5.5

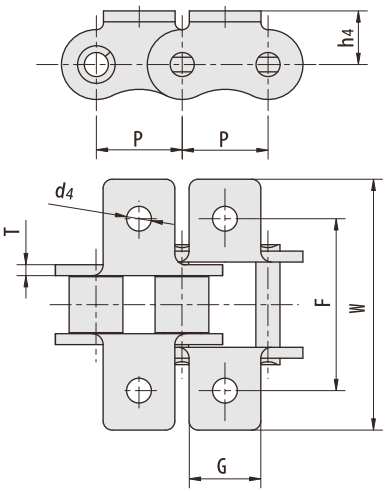

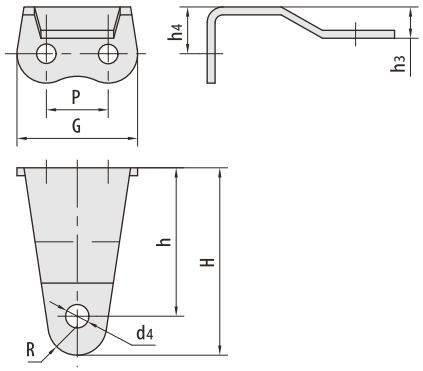

RBL chain number	P mm	G mm	h mm	H mm	h3 mm	h4 mm	d4 mm	R mm
06BSBF1	9.525	17.73	25.4	30.20	5.2	7.7	3.0	4.80
50SBF1	15.875	30.97	38.1	48.10	8.0	12.0	6.7	7.50
50SBF4	15.875	30.88	45.2	53.67	7.0	12.5	6.5	8.47
50SBF9	15.875	29.00	39.1	48.10	9.5	12.5	5.2	9.00

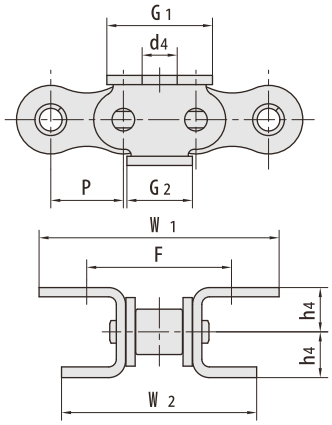

RBL chain number	P mm	G1 mm	G2 mm	F mm	W1 mm	W2 mm	h4 mm	d4 mm
60SBF3	19.05	27.7	17.2	38	63	51.8	11.62	9.2

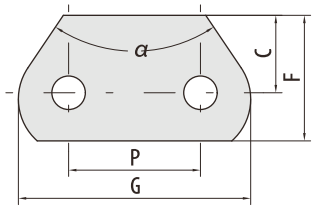

RBL chain number	P mm	G mm	C mm	F mm	a
P63SBF1	63.0	111	37	60	68°

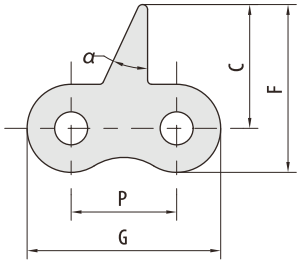

RBL chain number	P mm	G mm	C mm	F mm	a
08BSB-1STCF1-2	12.7	23.3	14.9	20.2	25°

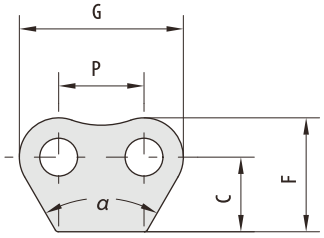

RBL chain number	P mm	G mm	C mm	F mm	a
40SBA1F5	12.7	24.4	11.1	16.95	60°

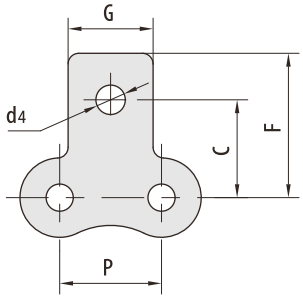

RBL chain number	P mm	G mm	C mm	F mm	d4
43SBSA1	12.700	9.5	12.7	19.05	3.4
10BSBF1	15.875	24.0	16.0	24.20	5.8
63SBF7SA1	19.050	15.9	18.3	27.00	5.5

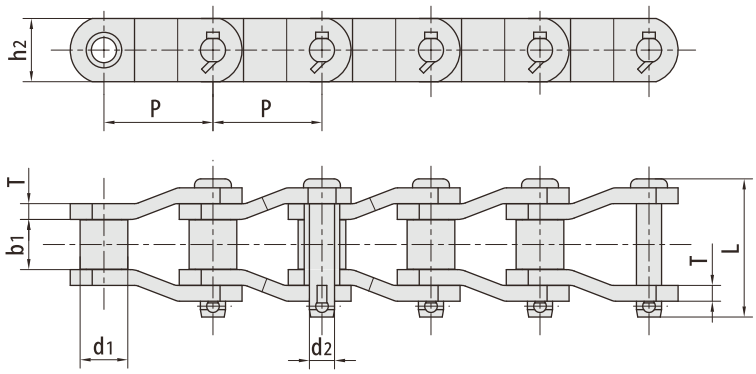

RBL chain number	Pitch P mm	Roller diameter d1 max mm	Width between inner plates b1 min mm	Pin diameter d2 max mm	Pin length L max mm	plate depth h2 max mm	Plate thickness t/T max mm	Tensile strength Q min kN/bf	Average Tensile strength Qo kN	Weight q kg/m
MXS432	42.01	22.23	25.40	11.10	57.9	28.50	4.8	8030/18363	88.0	5.65
1409F1	44.45	25.40	25.40	13.97	65.9	43.20	6.3	217.00/18782	238.7	9.65
R3112	50.80	28.70	31.00	14.20	73.9	41.40	6.4	168.90/38385	185.0	10.70
R3112F1	50.80	28.70	31.00	15.06	79.5	41.40	7.9	195.60/18363	225.0	12.23
SS2065	50.80	28.58	32.50	15.05	79.5	38.00	7.9	220.0049998	242.0	12.14
2010	63.50	31.75	38.10	15.90	89.0	47.80	7.9	250.00/56818	275.0	13.53
2010H	63.50	31.75	31.75	15.88	97.0	41.50	9.5	250.00/56818	275.0	11.91
2010SH	63.50	31.75	38.10	15.88	97.0	41.50	9.5	300.00/68181	330.0	12.00
*SS588F4	66.27	22.23	30.40	11.11	60.0	32.00	4.8	90.00/20454	103.0	5.05
MXS882	66.27	22.23	28.58	11.10	68.5	28.50	6.4	115.60/26272	124.8	5.30
SS588	66.27	22.23	28.60	11.11	63.7	28.60	6.4	130.00/29545	144.0	5.46
SS588F1	66.27	22.23	27.00	11.11	62.0	28.60	6.4	88.90/20205	97.8	5.39
SS588F2	66.27	22.23	27.00	9.53	59.0	25.40	5.6	84.46/19195	91.2	4.26
»MXS882F2	66.27	22.23	28.58	11.10	66.6	28.50	6.4	115.60/25987	124.8	5.39
M XS882F1	66.27	22.10	28.58	11.10	68.5	28.50	6.4	110.00/24728	121.0	5.39
SS588F7	66.27	22.35	26.90	11.20	60.0	28.70	4.8	80.00/17984	88.0	4.52
X603	76.20	22.50	38.00	14.00	88.0	40.00	8.0	147.00/33408	161.0	9.20
XS3011F1	77.90	31.75	39.60	19.05	100.0	57.00	9.7	407.50/18363	468.0	17.68
2512(1X33011)	77.90	41.28	39.60	19.05	100.0	57.00	9.7	340.00/77272	489.3	18.40
2512F2	77.90	41.28	38.50	19.05	103.4	60.00	10.0	400.00/90909	420.0	20.28
2512F3	77.90	41.28	40.00	18.60	104.2	46.70	11.0	340.00/77271	391.0	18.15
2512F4	77.90	41.28	39.60	19.05	110.0	60.00	12.0	407.50/92612	468.0	23.60
SS568H	77.90	41.30	39.70	19.05	97.6	57.00	9.5	460.00/103408	515.0	19.80
SS568HF2	77.90	31.75	39.70	19.05	98.5	57.00	9.5	447.00/101588	491.0	16.90
SS568HF3	77.90	41.30	39.70	19.05	104.1	57.00	11.0	48930/111203	562.0	20.85
SS568HF4	77.90	41.30	39.70	19.05	100.0	57.00	10.0	490.00/110152	539.0	19.80
2510	78.10	31.75	36.90	16.00	94.8	40.00	8.0	271.00/61590	292.6	10.72
2510F1	78.10	31.75	36.60	16.00	88.9	38.10	8.0	124.50/28295	137.0	9.93
2510F2	78.10	31.75	36.60	15.75	88.0	38.10	8.0	225.00/51135	248.0	11.70
2510H	78.10	31.75	36.90	16.50	95.3	45.00	9.5	280.40/63727	302.8	12.70

* bush chain: d1 the table indicates the external diameter of the bush.

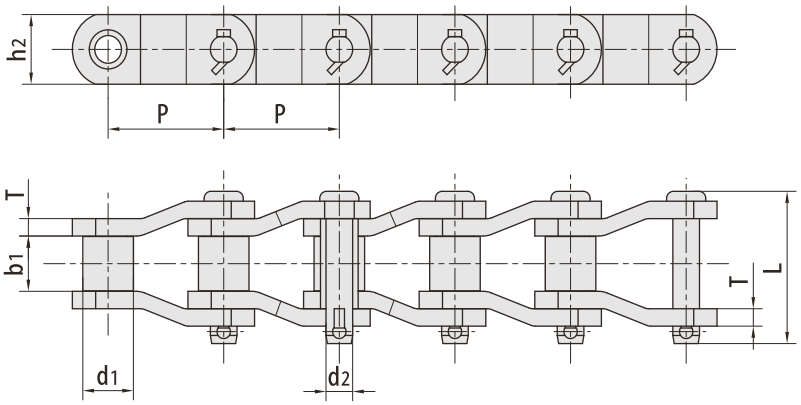

RBL chain number	Pitch P mm	Roller diameter d1 max mm	Width between inner plates b1 min mm	Pin diameter d2 max mm	Pin length L max mm	plate depth h2 max mm	Plate thickness t/T max mm	Tensile strength Q min kN/bf	Average Tensile strength Qo kN	Weight q kg/m
MXS 3075	78.100	31.75	38.10	16.46	93.50	44.50	9.70	334.0/75907	365.8	13.45
M XS3075F1	78.100	33.00	38.10	16.46	94.50	44.50	9.70	334.0/75907	365.8	14.00
M XS3075F1SH	78.100	33.00	38.10	16.46	94.50	44.50	9.70	360.0/81817	414.0	13.96
M XS3075F2	78.100	31.75	38.10	17.81	90.00	45.00	8.00	3332/75726	365.8	12.20
M XS3075F3	78.100	33.30	38.10	16.46	94.50	44.50	9.70	334.0/75908	384.0	14.00
M XS3075F4	78.100	33.30	38.10	17.15	94.50	44.50	9.70	360.0/81817	414.0	14.00
2510F3	78.100	31.75	38.10	16.00	87.10	38.10	7.90	194.0/43611	213.5	10.42
2510F5	78.100	31.75	38.10	15.88	86.00	38.10	7.90	194.0/43611	213.5	10.37
SS40HF2	78.100	31.75	38.10	16.00	87.50	38.10	8.00	236.0/53053	259.6	10.00
SS40H (P)	78.110	31.75	38.10	15.88	97.00	41.50	9.50	250.0/56818	280.0	12.60
DHAPBPF1	78.110	31.75	38.10	16.51	94.50	39.70	9.52	250.0/56200	275.0	12.53
M XS3075F6	78.110	31.75	38.10	16.46	92.50	44.50	9.70	250.0/56200	275.0	13.60
P78.18F1	78.180	33.00	40.00	17.81	102.00	45.00	10.00	333.2/74903	365.8	14.87
3125	79.370	41.27	39.70	20.32	101.60	57.20	9.50	347.1/78885	400.0	20.10
3125F2	79.370	41.27	41.30	20.32	105.00	57.20	9.50	481.2/109362	529.0	20.44
3125HF1	79.370	43.00	41.00	22.23	108.00	57.20	11.00	400.0/90908	500.0	23.25
2814	88.900	44.45	36.60	22.23	117.60	58.00	12.70	471.0/105955	622.7	25.70
2814F1	88.900	44.45	36.90	22.23	117.60	60.00	13.50	556.0/126358	611.0	24.20
2814F2	88.900	44.45	38.60	22.23	119.60	58.00	12.70	559.0/127040	614.9	25.40
2814F3	88.900	44.45	38.60	24.00	120.00	58.00	14.00	559.0/125663	614.9	26.00
2814F4	88.900	44.45	36.50	22.35	108.30	57.15	12.70	471.0/105881	507.6	23.30
DHE238R	88.900	44.45	38.10	22.12	112.80	57.15	12.70	445.0/100036	490.0	24.67
R01644F2	95.250	44.45	38.10	23.88	119.00	60.30	14.30	722.0/162306	794.0	28.14
R01644F1	96.000	44.80	39.00	23.80	119.00	60.00	14.00	530.0/120453	609.0	27.45
X604	101.600	25.00	57.00	16.00	117.00	50.00	10.00	227.0/51590	261.0	13.63
X704	101.600	30.00	57.00	18.00	125.50	55.00	12.00	280.0/62944	308.0	18.99
DHAPI4P	103.040	44.53	50.80	22.20	125.50	57.15	12.70	500.0/112400	550.0	24.27
DHAPI4PH	103.040	44.53	50.80	25.40	139.70	60.30	16.00	787.4/177000	870.0	30.00
581254	103.124	45.21	30.48	23.81	107.95	57.15	12.70	400.0/90908	460.0	22.67
S B1254F1	103.124	45.21	30.48	23.81	108.00	63.50	12.70	400.0/89920	460.0	24.50
3214	103.200	44.45	48.00	22.00	123.50	55.00	13.00	476.0/108180	514.0	23.60
3214F1	103.200	44.45	49.20	23.90	129.00	60.00	14.00	666.4/151450	700.0	26.70
3214F2	103.200	44.45	39.70	19.05	97.60	57.20	9.50	456.0/103635	500.0	17.67

* bush chain: d1 the table indicates the external diameter of the bush.

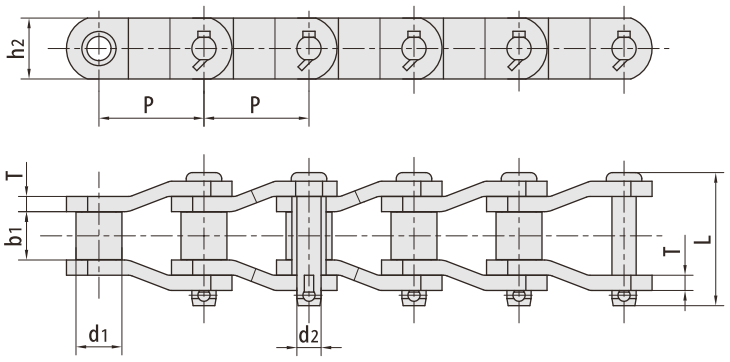

RBL chain number	Pitch	Roller diameter	Width between inner plates	Pin diameter	Pin length	plate depth	Plate thickness	Tensile strength	Average Tensile strength	Weight
	P mm	d1 max mm	b1 min mm	d2 max mm	L max mm	h2 max mm	t/T max mm	Q min kN/bf	Qo kN	q kg/m
3214F3	103.200	46.00	49.20	23.90	123.50	60.00	13.0	539.0/122498	619.0	26.16
M X S 1242	103.200	44.45	49.20	22.23	124.50	57.00	12.8	566.4/127327	623.0	24.63
M XS1242F1	103.200	44.45	55.00	22.23	128.80	57.00	12.8	623.0/141589	716.0	24.16
SS124	103.200	44.45	49.20	22.23	127.20	57.00	12.7	560.0/127272	590.0	22.57
3214F5	103.200	44.45	49.00	23.23	137.0	58.70	16.0	686.0/154213	720.3	30.00
3214F6	103.200	44.45	49.20	26.80	130.0	76.20	14.5	750.0/168600	787.5	32.90
DHAPI4PF1	103.200	44.45	50.80	22.23	125.2	57.15	12.7	560.0/125888	616.0	24.37
3315	103.450	45.24	49.30	23.85	130.00	63.50	14.2	550.0/125000	756.2	27.71
3315F1	103.450	45.24	47.60	23.85	134.00	60.00	15.0	650.0/147725	747.0	27.34
3315F2	103.450	50.00	49.30	25.00	142.50	63.50	16.0	620.0/140907	713.0	32.50
SH1245	103.450	45.30	49.60	23.80	130.00	60.00	14.5	722.0/164084	794.0	31.00
SS1245	103.450	45.20	49.60	23.80	129.40	60.00	14.5	550.0/125000	605.0	31.19
SS1245F1	103.450	45.20	49.60	25.60	132.30	60.00	14.5	530.0/120453	609.0	28.53
SS1245F2	103.450	46.20	52.00	23.80	139.20	60.00	16.0	530.0/120453	609.0	31.15
3315F3	103.450	45.24	49.20	23.85	131.0	60.30	14.3	550.0/123640	594.0	27.70
SS1245F3	103.450	45.20	49.60	23.80	130.0	60.00	14.5	722.0/162306	794.0	31.19
SS1245F4	103.450	45.20	49.30	23.80	130.3	60.00	14.5	550.0/123640	594.0	28.40
3217F1	103.880	47.60	49.20	28.05	130.0	84.00	14.0	880.0/197824	950.4	35.60
3618	114.300	57.15	52.30	27.97	138.00	79.20	14.2	760.0/172727	978.6	41.20
3618F1	114.300	57.15	50.80	27.71	134.6	75.00	14.0	850.0/191080	918.0	28.50
SS635H	114.300	57.20	52.40	27.94	137.00	76.20	14.5	760.0/172727	836.0	37.80
SS635HF2	114.300	57.20	52.40	27.94	137.00	76.20	14.5	964.0/219085	1060.4	37.90
SS635HF3	114.300	57.20	52.40	27.94	149.0	76.20	17.5	964.0/216707	1060.0	43.60
SS635HF5	114.300	57.20	52.40	29.00	143.0	76.20	16.0	800.0/179840	864.0	39.80
SS635HF6	114.300	57.15	52.40	27.94	133.4	76.20	14.5	850.0/191080	918.0	38.30
4020	127.000	63.50	69.90	31.78	165.7	88.90	15.7	987.0/224300	1379.0	48.60
4020F1	127.000	63.50	68.30	31.78	168.1	90.00	17.0	1100.0/249997	1265.0	50.60
4020F2	127.000	69.85	68.30	35.05	173.0	95.25	19.0	1100.0/249997	1265.0	59.08
4020F3	127.000	63.50	69.90	34.93	176.0	91.00	19.0	1410.0/320450	1551.0	58.40
4020HF1	127.000	63.50	69.90	34.93	176.0	88.90	19.0	1300.0/295451	1495.0	54.50

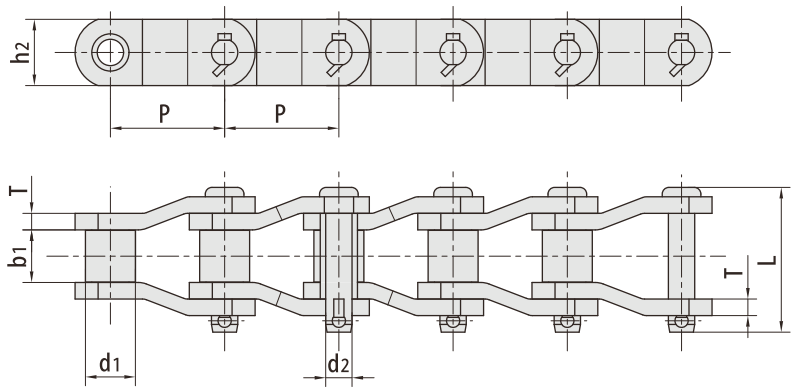

RBL chain number	Pitch	Roller diameter	Width between inner plates	Pin diameter	Pin length	plate depth	Plate thickness	Tensile strength	Average Tensile strength	Weight
	P mm	d1 max mm	b1 min mm	d2 max mm	L max mm	h2 max mm	t/T max mm	Q min kN/bf	Qo kN	q kg/m
4020HF2	127.000	63.50	65.02	34.93	171.0	88.90	19.0	1300.0/295451	1430.0	38.58
4020SHF1	127.000	63.50	69.90	31.78	165.7	88.90	15.7	1333.0/302905	1532.0	48.60
R0 1205	127.000	63.50	65.00	31.75	147.6	82.50	14.2	872.0/198177	955.0	42.93
4020F5	127.000	63.50	65.60	34.93	168.6	91.00	19.00	1300.0/292240	1430.0	57.00
4020F6	127.000	63.50	69.90	31.78	158.8	88.90	15.70	1220.0/274256	1342.0	50.90
4020HF4	127.000	63.50	62.00	35.00	166.6	88.90	19.00	1250.0/281000	1375.0	57.45
4020SHF2	127.000	63.50	69.90	32.00	164.3	90.00	16.00	1330.0/298984	1463.0	52.10
DH1605F1	127.000	63.50	65.10	35.00	169.5	88.90	19.05	860.0/I93328	946.0	55.80
4424F1	139.700	76.20	76.30	38.05	188.0	101.60	19.00	1680.0/377664	1764.0	70.26
DH5500A	139.700	76.35	76.30	38.05	188.0	101.60	19.00	1400.0/314720	1540.0	68.12
P140F3	140.000	65.00	80.00	36.00	191.0	90.00	20.00	1176.0/264365	1293.6	64.24
2184	152.400	76.20	35.00	22.20	96.0	51.00	9.5	330.0/75000	378.0	18.17
4824	152.400	76.20	74.60	38.10	186.0	100.00	20.0	1600.0/363632	1868.3	69.80
6060	152.400	88.90	101.00	47.63	228.7	114.30	22.0	1700.0/386359	1955.0	97.59
DH6042F1	152.400	76.35	76.30	38.05	188.0	101.60	19.0	1400.0/318178	1610.0	58.36
R0 6042F1	152.400	76.20	76.30	44.00	184.0	120.00	19.0	1500.0/340900	1600.0	63.60
4824F1	152.400	76.20	76.20	38.10	187.6	100.00	20.00	1600.0/359680	1700.0	69.90
6060F3	152.400	88.90	77.00	47.63	204.7	114.30	22.00	1350.0/303480	1485.0	89.77
DH6042F2	152.400	76.20	76.20	38.05	188.0	101.60	19.05	1880.0/422624	2068.0	57.80
DH6042F3	152.400	76.20	76.30	38.10	182.3	101.60	19.00	1646.0/370021	1728.3	68.12
DH6042F4	152.400	76.20	76.20	38.10	179.4	120.00	19.05	1500.0/337200	1600.0	78.10
DH6042F5	152.400	76.20	76.20	41.00	195.2	106.00	23.00	1500.0/337200	1600.0	77.08
DH6042F6	152.400	76.35	76.20	38.05	186.0	101.60	19.00	1333.0/300000	1466.3	59.40
P153	153.619	34.93	53.98	17.48	107.0	44.50	9.5	150.0/34090	165.0	10.90
#P153F1	153.619	34.93	53.98	17.48	100.0	44.50	8.0	150.0/34090	165.0	9.74
#P153F2	153.619	34.93	53.98	17.48	100.0	44.50	8.0	150.0/34090	165.0	9.80
5628	177.800	88.90	82.60	44.45	210.0	133.00	22.0	1890.0/429540	2173.0	99.50
5628F1	177.800	88.90	82.60	44.45	210.0	127.00	22.0	2224.0/505448	2557.0	96.80
5628F4	177.800	89.00	81.00	47.00	225.0	129.50	24.75	24443/550000	2640.0	104.00

Indicate with hole at plate center

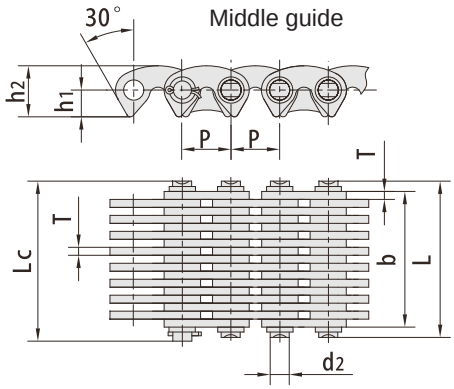

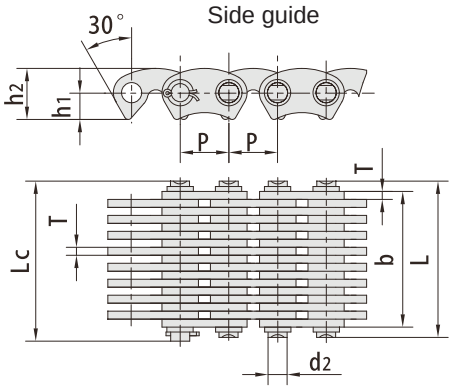

RBL chain number	Pitch P mm	chain Width b min mm	Pin diameter d2 max mm	Pin length L max mm	Pin length Lc max mm	dustance from hole center to tooth h1 mm	plate depth h2 max mm	Plate thickness T max mm	Guide type	Number of plates n	Tensile strength Q min kN/lbf	Average Tensile strength Q o kN	Weight q kg/m
		10.5		15.8	17.5				outside	7	8.0/1798	8.9	0.48
		13.5		18.5	20.0				outside	9	10.0/2272	11.2	0.60
		16.5		21.5	23.0				outside	11	12.5/2840	14.0	0.73
		19.5		24.5	26.0				outside	13	15.0/3409	16.8	0.85
		22.5		27.5	29.0				outside	15	17.5/3997	19.6	1.00
SC3	9.525	28.5	3.95	33.5	35.0	5.3	10.0	1.5	inside	19	22.5/5114	25.2	1.26
		34.5		39.5	41.5				inside	23	27.5/6182	30.8	1.60
		37.5		42.5	44.0				inside	25	30.0/6744	33.6	1.73
		40.5		45.5	47.5				inside	27	32.5/7306	36.4	1.86
		43.5		48.5	50.2				inside	29	35.0/7868	39.2	1.99
		46.5		51.5	53.0				inside	31	37.0/8318	41.4	2.12
		19.5		24.5	26.0				outside	13	23.4/5318	26.2	1.15
		22.5		27.5	29.0				outside	15	27.4/6227	30.6	1.33
		25.5		30.5	32.0				outside	17	31.3/7114	35.0	1.50
		28.5		33.5	35.0				inside	19	35.2/8000	39.4	1.68
SC4	12.700	34.5	5.08	39.5	41.0	7.0	13.5	1.5	inside	23	43.0/9772	48.1	2.04
		40.5		45.5	47.0				inside	27	50.8/11364	56.8	2.39
		46.5		51.5	53.0				inside	31	58.6/13318	65.6	2.74
		52.5		57.5	59.0				inside	35	66.4/15091	74.3	3.10
		61.5		67.8	69.5				inside	41	78.2/I7579	86.8	3.68
		22.0		29.0	30.2				inside	11	32.6/7328	36.1	1.62
		26.0		33.0	34.2				inside	13	39.0/8767	43.2	1.92
		30.0		37.0	38.2				inside	15	45.6/I0364	50.6	2.21
		34.0		41.0	42.2				inside	17	52.1/11712	57.8	2.51
		38.0		45.0	46.2				inside	19	58.6/13318	65.0	2.80
		42.0		49.0	50.3				inside	21	65.1/14634	72.2	3.10
SC5	15.875	46.0	5.92	53.0	54.2	8.7	16.7	2.0	inside	23	71.7/16295	79.5	3.39
		50.0		57.0	58.4				inside	25	75.0/16860	83.2	3.69
		54.0		61.0	62.4				inside	27	84.7/19250	94.0	3.99
		62.0		69.0	70.4				inside	31	97.7/22204	108.4	4.58
		66.0		73.0	74.4				inside	33	100.0/22480	111.0	4.88
		70.0		77.0	78.4				inside	35	111.0/24953	123.2	5.18
		78.0		85.0	86.4				inside	39	124.0/27875	137.6	5.77

Middle guide

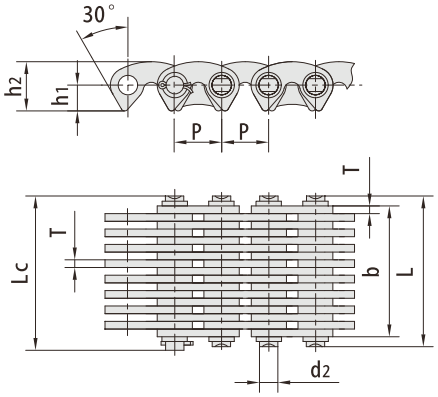

Side guide

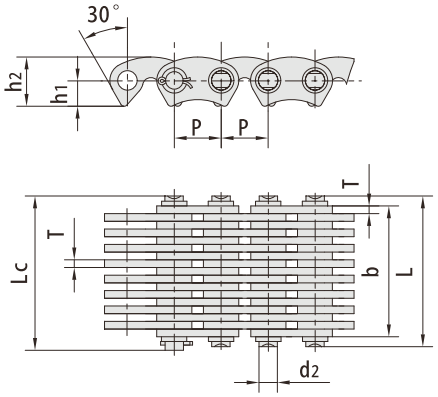

RBL chain number	Pitch	chain Width	Pin diameter	Pin length		dustance from hole center to tooth	plate depth	Plate thickness	Guide type	Number of plates	Tensile strength	Average Tensile strength	Weight
	P	b min	d2 max	L max	Lc max	h1	h2 max	T max		n	Q min	Q o	q
	mm	mm	mm	mm	mm	mm	mm	mm			kN/lbf	kN	kg/m
		26.0		33.0	34.8				inside	13	46.0/10341	51.0	2.46
		34.0		41.0	42.5				inside	17	62.5/14050	69.3	3.16
		38.0		45.0	46.5				inside	19	70.0/15909	77.6	3.37
		46.0		53.0	54.5				inside	23	86.0/19545	95.4	4.08
		50.0		57.8	59.6				inside	25	93.7/21064	104.0	4.59
		54.0		61.0	62.8				inside	27	102.0/23182	113.2	4.78
		58.0		65.8	67.6				inside	29	108.8/24458	120.7	5.30
		62.0		69.0	70.8				inside	31	117.0/26591	129.8	5.50
SC 6	19.050		6.90			8.7	16.7	2.0					
		66.0		73.8	75.6				inside	33	124.4/27965	138.0	6.01
		70.0		77.0	78.8				inside	35	133.0/30227	147.6	6.20
		74.0		82.5	84.5				inside	37	140.6/31607	156.0	6.83
		78.0		85.0	86.8				inside	39	149.0/33495	165.3	7.07
		86.0		93.0	94.8				inside	43	164.0/36867	182.0	7.79
		94.0		101.0	102.8				inside	47	180.0/40464	199.8	8.50
		126.0		133.0	135.0				inside	63	191.4/43027	212.4	11.38
		158.0		165.0	166.8				inside	79	240.0/53952	266.4	14.19
		27.0		34.0	36.0				inside	9	70.0/l5736	77.7	3.36
		33.0		40.5	42.0				inside	11	78.1/17557	86.6	4.07
		45.0		52.0	53.5				inside	15	111.0/25227	123.2	5.31
SC8	25.400	51.0	8.90	58.0	59.5	10.5	20.0	2.0	inside	17	125.0/28409	138.7	6.02
		57.0		64.0	65.5				inside	19	141.0/32045	156.5	6.37
		69.0		76.2	77.7				inside	23	172.0/39091	190.9	8.15
		81.0		88.2	89.7				inside	27	203.0/46163	225.3	9.57
		93.0		100.2	101.7				inside	31	235.0/53409	260.8	10.98

Middle guide

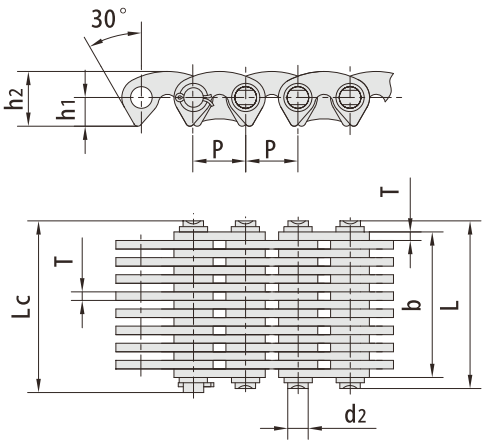

Side guide

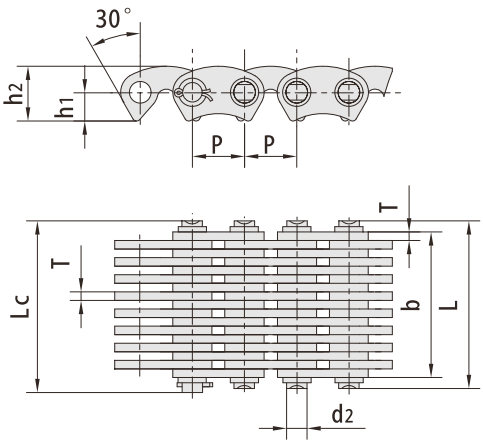

RBL chain number	Pitch	chain Width	Pin diameter	Pin length		dustance from hole center to tooth	plate depth	Plate thickness	Guide type	Number of plates	Tensile strength	Average Tensile strength	Weight
	P mm	b min mm	d2 max mm	L max mm	Lc max mm	h1 mm	h2 max mm	T max mm		n	Q min kN/lbf	Q o kN	q kg/m
		57.0		66.6	69.6				inside	19	165.0/37500	183.1	8.42
		63.0		70.2	72.0				inside	21	156.0/35069	173.1	7.57
		69.0		78.6	81.6				inside	23	201.0/45681	223.1	10.19
		75.0		82.2	84.0				inside	25	187.5/42150	208.1	8.97
		81.0		88.2	89.7				inside	27	203.0/46163	225.3	9.57
		87.0		94.2	96.0				inside	29	219.0/49231	243.0	10.38
		93.0		102.6	105.6				inside	31	273.0/62045	303.0	13.73
SC10	31.750	99.0	10.84	106.7	108.2	17.5	33.4	3.0	inside	33	245.0/55076	271.9	11.79
		105.0		114.6	117.6				inside	35	310.0/70454	341.0	15.50
		105.0		112.2	113.7				inside	35	266.0/59797	295.2	12.49
		111.0		119.2	120.5				inside	37	274.0/61595	304.1	13.21
		117.0		126.6	129.6				inside	39	346.0/78636	380.6	12.27
		117.0		124.2	125.7				inside	39	297.0/66766	329.6	13.87
		135.0		142.5	144.5				inside	45	334.0/75083	370.7	16.00
		30.0		37.0	38.5				inside	15	74.0/16635	81.4	3.74
		34.0		41.0	42.5				inside	17	84.0/18883	92.4	4.22
		38.0		45.0	46.5				inside	19	94.0/21131	103.4	4.69
*SC8F1	25.400	46.0	8.90	53.0	54.5	14.0	26.7	2.0	inside	23	115.0/25852	126.5	5.64
		54.0		61.2	62.7				inside	27	136.0/30573	149.6	6.59
		62.0		69.2	70.7				inside	31	157.0/35294	172.7	7.54
		70.0		77.2	78.7				inside	35	178.0/40014	195.8	8.49
		78.0		85.2	86.7				inside	39	198.0/44510	217.8	9.44

* Indicate RBL chain part number

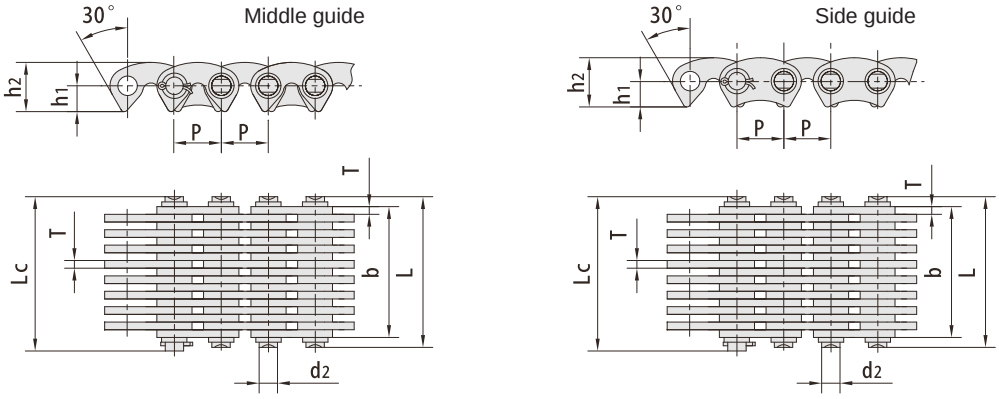

RBL chain number	Pitch	chain Width	Pin diameter	Pin length		dustance from hole center to tooth	plate depth	Plate thickness	Guide type	Number of plates	Tensile strength	Average Tensile strength	Weight
	P mm	b min mm	d2 max mm	L max mm	Lc max mm	h1 mm	h2 max mm	T max mm		n	Q min kN/lbf	Q o kN	q kg/m
C4-120		19.5		24.5	26.0				inside	13	20.04545	22.2	1.20
C4-123		22.5		27.5	29.0				inside	15	23.0/5227	25.5	1.37
C4-129	12.7	28.5	5.08	33.5	35.0	6.62	12.1	1.5	inside	19	283/6477	31.6	1.72
C4-132		31.5		36.5	38.0				inside	21	313/7159	34.9	1.89
C4-138		37.5		42.5	44.0				inside	25	38.04636	42.1	2.22
C4-150		49.5		54.5	56.0				inside	33	50.0/11363	55.5	2.90
C4-320		19.5		24.5	26.0				outside	13	20.04545	22.2	1.21
C4-323		22.5		27.5	29.0				outside	15	23.0/5227	25.5	1.38
C4-329	12.7	28.5	5.08	33.5	35.0	6.62	12.1	1.5	outside	19	283/6477	31.6	1.73
C4-332		31.5		36.5	38.0				outside	21	313/7159	34.9	1.90
C4-338		37.5		42.5	44.0				outside	25	38.04636	42.1	2.23

Double pitch silent chains

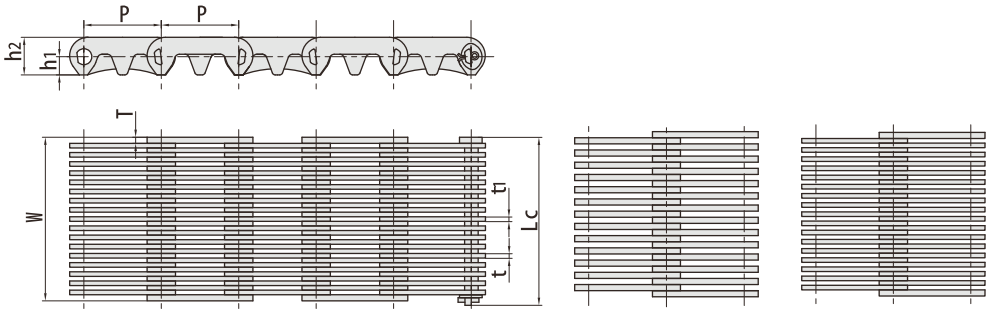

RBL chain number	Pitch	chain Width	Pin length	plate depth		Plate thickness		Guide type	Number of plates	Tensile strength	Weight
	P mm	b min mm	Lc max mm	h1 mm	h2 max mm	t/t1 max mm	T max mm		n	Q min kN/lbf	q kg/m
CL208F1-55.8N	25.4	55.8	55.8	6.2	12.6	2.0	1.5	inside	3508X17)	66.4/14928	2.59
HV4TT-14X13N	25.4	55.8	55.8	6.2	12.6	2.0	2.0	inside	2704X13)	66.4/14928	2.57

Self-tooth-forming chains(P.I.V chains)

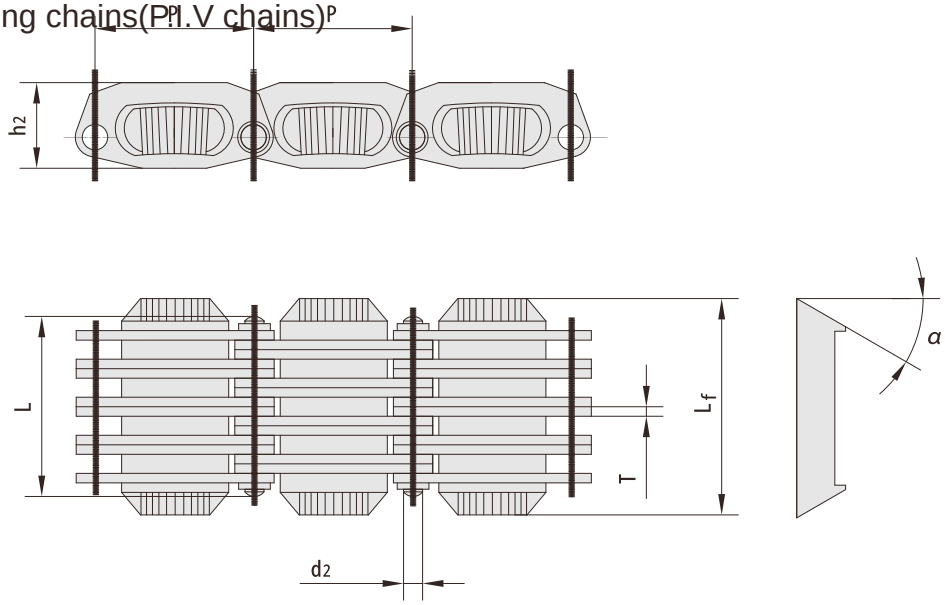

RBL chain number	Pitch P mm	Pin diameter d2 min mm	Pin length L max mm	plate depth h2 max mm	Plate thickness T max mm	Width over friction plate Lf mm	Angel of friction plates a	Tensile strength Q min kN/lbf	Average Tensile strength Q o kN	Weight q kg/m
Ao	18.75	3.00	19.5	9.5	1.0	24.0	15“	9.0/2045	9.9	1.00
A1 (A2)	25.00	3.00	30.1	13.5	1.5	37.8	15“	21.0/4772	23.3	2.23
A3	28.60	3.00	35.3	16.0	1.5	44.2	15“	38.5/8750	42.7	3.04
A4	36.00	4.00	48.5	20.5	1.5	58.5	15“	61.5/13977	68.2	5.54
A5	36.00	4.00	60.5	20.5	1.5	70.0	15“	71.0/16136	78.8	6.70

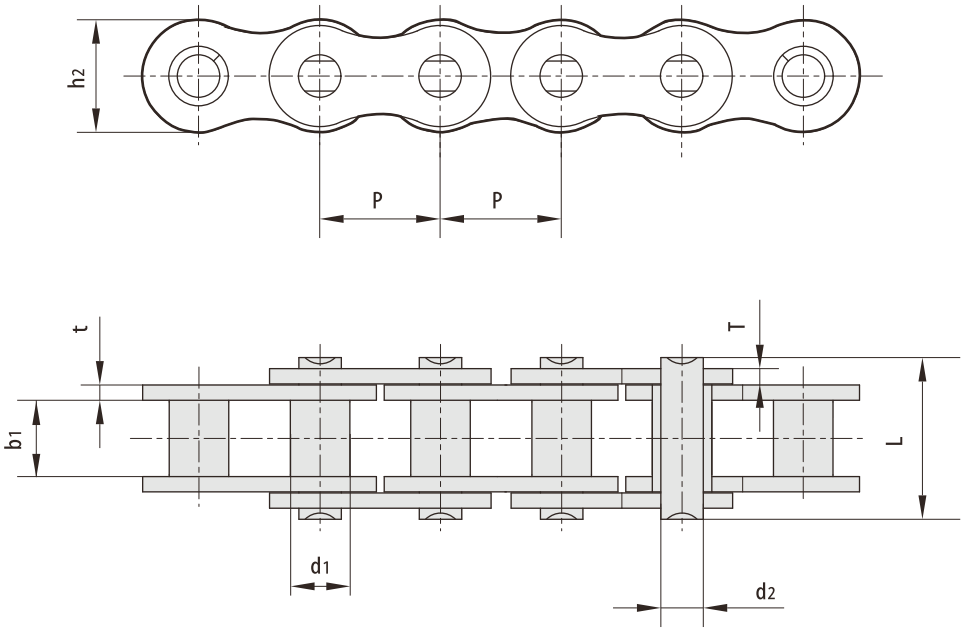

RBL chain number	Pitch	Bush diameter	Width between inner plates	Pin diameter	Pin length	Inner plate depth	Plate thickness	Tensile strength	Average Tensile strength	Weight
	P	b1 max	b1	d2 max	L max	h2	t/T	Q min	Qo	q
	mm	mm	mm	mm	mm	mm	mm	kN/lbf	kN	kg/m
25	6.350	3.30	3.18	2.31	7.90	6.00	0.80	3.5/795	4.6	0.15
25H	6.350	3.30	3.18	2.31	8.90	6.00	1.04	4.8/1091	5.5	0.17
25H (E)	6.350	3.30	3.18	2.31	8.90	6.00	1.04	5.8/1304	6.4	0.18
25HF2	6.350	3.30	3.18	2.31	9.10	5.80	1.2/1.10	5.8/1304	6.4	0.19
25SHF1	6.350	3.30	3.18	2.01	8.95	5.90	1.04	4.8/1091	5.5	0.19
219H	7.774	4.59	5.00	3.01	11.90	7.40	1.2/1.04	7.3/1641	8.0	0.28
*C219H	7.774	4.59	5.00	3.01	11.90	7.40	1.2/1.04	7.3/1641	8.0	0.33
219HT	7.774	4.59	4.60	3.01	12.15	7.55	1.4/1.3	6.6/1483	7.2	0.33
219H F2	7 774	4 59	4 50	3 01	11 90	7 40	1 4/1 3	6 6/1483	7 2	0 31
219HF1	7.785	4.60	4.50	3.28	13.00	7.00	2.0/1.40	9.0/2024	9.8	0.37
270H	8 500	5 00	4 75	3 28	13 15	8 45	1 8/I 40	10 8/2428	11 9	0 43

* Straight side plate

Plates lacing

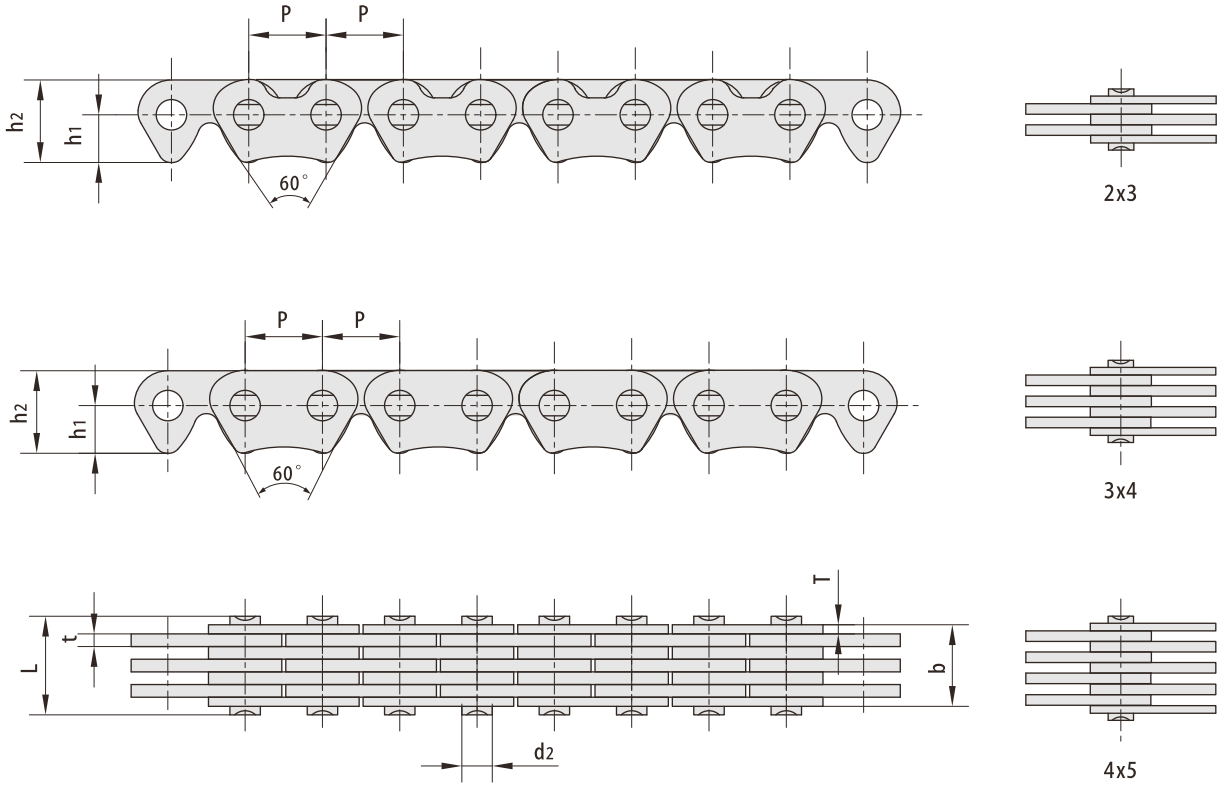

RBL chain number	Pitch	Chain width	Pin diameter	Pin length	Distance from hole center to tooth	plate depth	Plate thickness	Guide type	Number of plates	Tensile strength	Average Tensile strength	Weight
	P mm	b max mm	d2 min mm	L max mm	h1 mm	h2 max mm	t/T max mm		n	Q min kN/bf	Q o kN	q kg/m
C L04-2X3	6.35	4.35	2.50	6.05	3.94	6.80	1.04X1.75	£N) uts'de	5 ex 3)	5.19/1179	5.4	0.22
C L04-3X4	6.35	6.35	2.50	8.20	3.90	6.72	1.04X1.75	$H0 uts'de	7G^{X}4)	8.82/2004	9.2	0.28
C L04-4X5	6.35	9.40	2.50	10.90	3.90	6.72	1.04	$N) uts'de	9 (lx 5)	11.76/2672	12.3	0.35

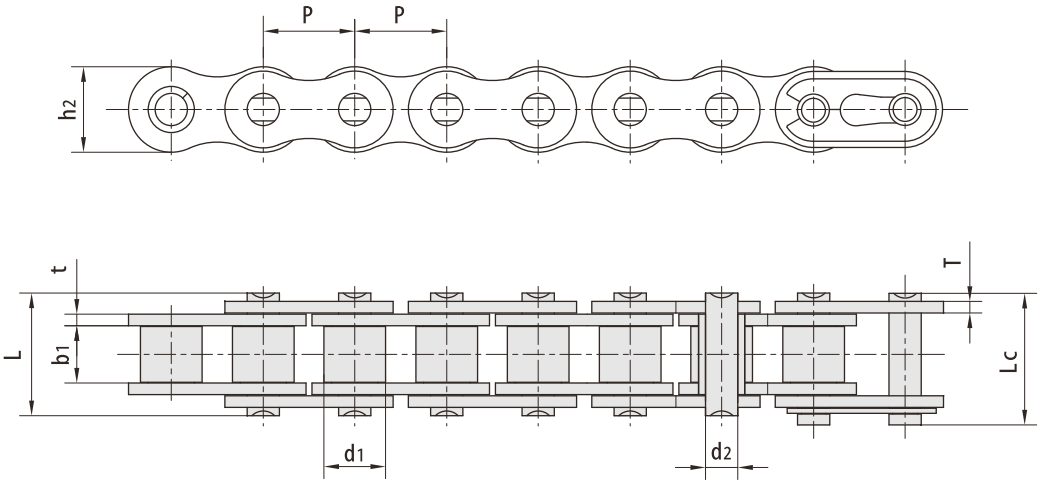

RBL chain number	Pitch	Roller diameter	Width between inner plates	Pin diameter	Pin length		Inner plate depth	Plate thickness	Tensile strength	Average Tensile strength	Weight
	P	d1 max	b1 min	d2 max	L max	Lc max	h2 max	t/T max	Q min	Q o	q
	mm	mm	mm	mm	mm	mm	mm	mm	kN/lbf	kN	kg/m
*T3F	9.525	6.00	9.50	4.50	18.60	20.00	9.30	1.85/1.50	11.80/2653	13.6	0.61
420	12.700	7.77	6.25	3.96	14.70	16.10	12.00	1.50	16.00/3597	17.6	0.55
420F3	12.700	7.77	6.40	3.97	15.00	16.60	11.80	1.60/1.45	16.00/3597	17.6	0.64
420HF1	12.700	7.77	6.25	3.96	17.00	18.40	12.00	2.03	16.00/3597	17.6	0.76
420HT	12.700	7.77	6.25	3.96	17.00	-	12.00	2.03	21.40/4811	23.5	0.76
428	12.700	8.51	7.75	4.45	16.70	18.20	11.80	1.60	17.80/4002	19.6	0.70
428F1	12.700	8.51	7.94	4.50	16.70	18.05	11.80	1.60	17.15/3855	19.4	0.71
428DS	12.700	8.51	7.94	4.45	17.90	19.30	12.00	1.85	18.62/4186	21.0	0.76
428H	12.700	8.51	7.85	4.45	18.80	19.90	11.80	2.03	20.60/4631	23.4	0.79
428HF1	12.700	8.51	7.85	4.45	17.90	19.00	11.80	1.80	19.50/4384	20.7	0.74
428HSH	12.700	8.51	7.75	4.45	20.00	-	12.00	2.42	27.00/6070	29.4	0.89
428HF4	12.700	8.51	7.94	4.50	18.90	20.10	11.80	2.03	20.50/4609	23.4	0.82
428HD	12.700	8.51	7.85	4.45	18.80	19.90	11.80	2.03	20.60/4631	23.4	0.85
428F3	12.700	8.51	7.85	4.45	16.70	18.20	11.70	1.60	17.80A002	19.6	0.77
428F4	12.700	8.51	7.85	4.45	16.70	18.20	11.80	1.60	17.80A002	19.6	0.72

* bush chain: d1 the table indicates the external diameter of the bush.

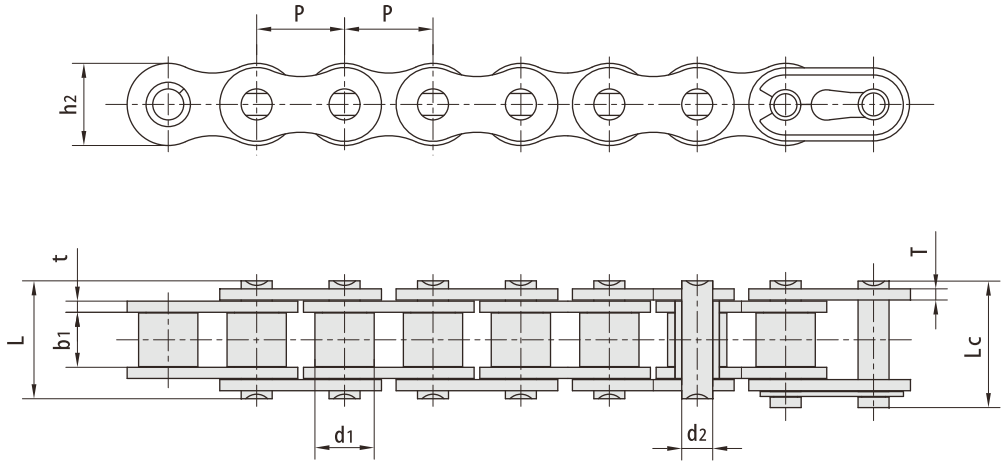

RBL chain number	Pitch	Roller diameter	Width between inner plates	Pin diameter	Pin length		Inner plate depth	Plate thickness	Tensile strength	Average Tensile strength	Weight
	P mm	d1 max mm	b1 min mm	d2 max mm	L max mm	Lc max mm	h2 max mm	t/T max mm	Q min kN/lbf	Q o kN	q kg/m
520	15.875	10.16	6.25	5.08	17.50	19.00	15.09	2.03	26.50/5957	29.7	0.89
520F2	15.875	10.16	6.35	5.24	17.50	19.05	15.09	2.03	26.50/5957	29.7	0.97
520F3	15.875	10.16	6.48	5.08	17.50	19.00	15.09	2.03	26.50/5957	29.7	0.89
520MH	15.875	10.22	6.25	5.25	19.00	21.20	15.30	2.20	30.50/6857	33.6	-
520HD	15.875	10.16	6.35	5.34	18.60	20.00	15.09	2.20	35.00/7868	38.5	1.04
525	15.875	10.16	7.95	5.08	19.30	20.70	15.09	2.03	26.50/5957	29.7	1.06
525MH	15.875	10.22	7.85	5.25	21.20	23.20	15.30	2.20	30.50/6857	33.6	-
525HF1	15.875	10.16	7.95	5.08	20.90	22.30	15.09	2.42	26.50/5957	29.7	1.20
530	15.875	10.16	9.40	5.08	20.70	22.20	15.09	2.03	26.50/5957	29.7	1.06
5305 H	15.875	10.16	9.40	5.08	22.10	-	15.09	2.42	32.80/7374	33.5	1.24
520F12	15.875	10.16	6.25	5.25	17.60	-	15.00	2.03	29.43/6615	32.3	0.98
520HF7	15.875	10.22	7.80	5.30	21.35	-	15.30	2.8/2.42	40.00/8992	44.0	1.43
630	19.050	11.91	9.40	5.94	23.00	24.80	18.00	2.42	35.30/7936	38.8	-

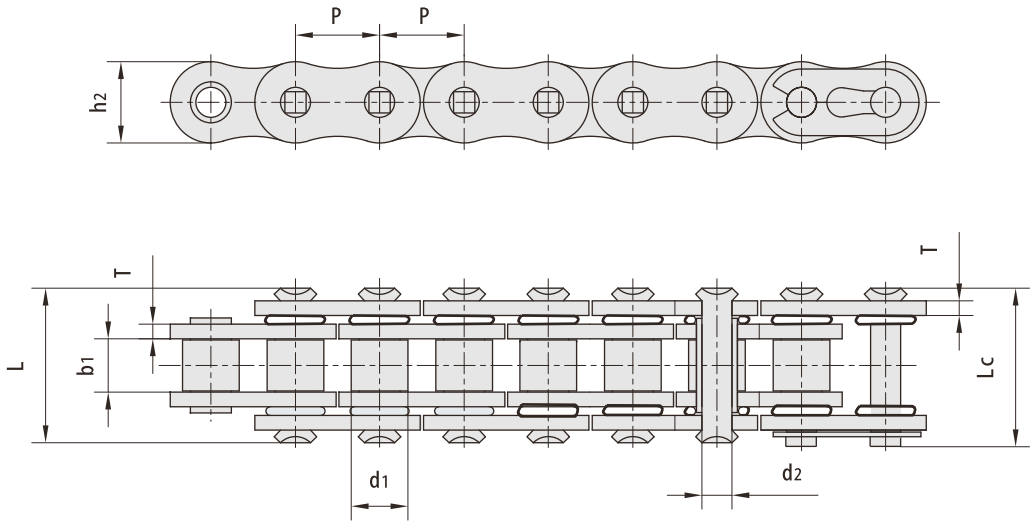

RBL chain number	Pitch	Roller diameter	Width between inner plates	Pin diameter	Pin length		Inner plate depth	Plate thickness	Tensile strength	Average Tensile strength	Weight
	P mm	d1 max mm	b1 min mm	d2 max mm	L max mm	Lc max mm	h2 max mm	t/T max mm	Q min kN/lbf	Q o kN	q kg/m
420 0R	12.700	7.77	6.25	3.96	16.65	17.95	12.00	1.50	16.0/3599	17.00	0.62
420H 0R	12.700	7.77	6.25	3.96	18.80	20.10	12.00	2.03	16.0/3599	17.00	0.74
428HVS	12.700	8.51	7.94	4.45	21.70	22.70	12.30	2.03	22.0/4946	23.00	0.85
50LD	15.875	10.16	9.53	5.08	23.40	24.60	15.09	2.03	22.2/5045	26.50	1.12
520 0R	15.875	10.16	6.70	5.30	21.20	22.30	15.09	2.20	32.0/7200	34.00	1.11
520F1 0R	15.875	10.16	6.25	5.30	21.20	22.30	15.09	2.20	32.0/7200	34.00	1.09
520F2 0R	15.875	10.16	9.65	5.30	24.10	25.50	15.09	2.20	32.0/7200	34.00	1.21
520V6	15.875	10.16	6.25	5.08	19.80	21.30	15.09	2.03	22.2/5045	26.50	0.96
520H 0 R	15.875	10.16	6.25	5.24	21.52	22.92	15.09	2.42	26.5/6022	29.60	1.26
525 0R	15.875	10.16	7.95	5.30	21.50	22.90	15.09	2.03	26.5/6022	29.60	1.30
525F1 0R	15.875	10.16	7.95	5.30	23.10	24.00	15.09	2.20	32.0/7200	34.00	1.16
520F14 0R	15.875	10.20	6.25	5.09	19.90	-	14.90	1.80	28.4/6391	30.60	0.92
525H 0 R	15.875	10.16	7.95	5.30	23.10	24.50	15.09	2.42	26.5/6022	29.60	1.44
530H 0 R	15.875	10.16	9.53	5.24	24.80	26.20	15.09	2.42	29.0/6524	30.00	1.39
630F1 0R	19.050	11.91	9.53	5.94	25.50	27.30	18.00	2.42	31.8/7149	35.00	1.50

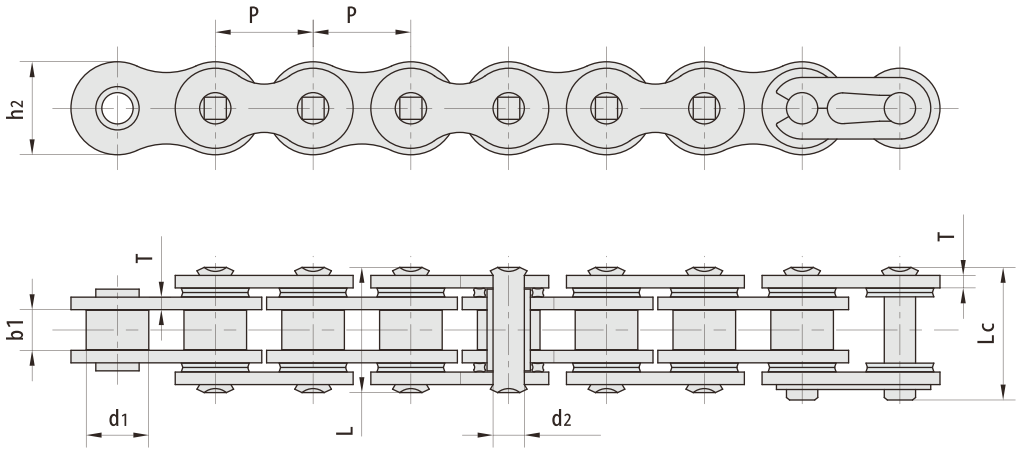

RBL chain number	Pitch	Roller diameter	Width between inner plates	Pin diameter	Pin length		Inner plate depth	Plate thickness	Tensile strength	Average Tensile strength	Weight
	P	d1 max	b1 min	d2 max	L max	Lc max	h2 max	t/T max	Q min	Q o	q
	mm	mm	mm	mm	mm	mm	mm	mm	kN/lbf	kN	kg/m
520 XR	15.875	10.20	6.25	5.09	20.10	21.10	15.09	2.03	28.00/6294	29.4	1.00
520F9XR	15.875	10.30	6.25	5.39	20.10	-	15.00	2.03	33.83/7605	35.5	1.00
520H XR	15.875	10.16	6.25	5.24	21.52	22.92	15.09	2.42	30.00/6744	31.5	1.28
525 XR	15.875	10.20	7.85	5.09	21.70	22.70	15.09	2.03	26.50/5957	27.8	1.07
525H XR	15.875	10.16	7.95	5.30	23.10	24.50	15.09	2.42	26.50/5957	27.8	1.44
5255H XR	15.875	10.30	7.85	5.39	23.26	-	15.00	2.42	38.25/8599	40.2	1.20
530H XR	15.875	10.16	9.53	5.24	24.80	26.20	15.09	2.42	29.00/6519	30.5	1.39
5305H XR	15.875	10.30	9.40	5.39	24.91	-	15.00	2.42	38.25/8599	40.2	1.27

Bush chain for engine timing is manly used for diesel engine timing system and the balance shaft system etc... Compared with the roller chain, it has simpler structure and higher wear resistance

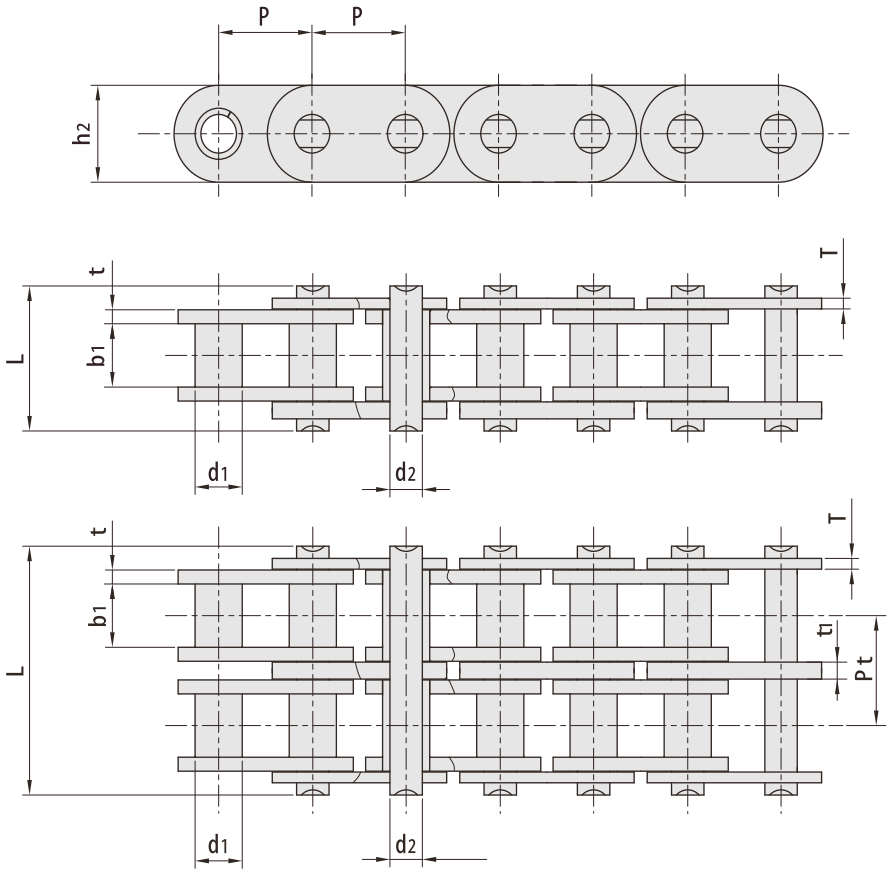

RBL chain number	Pitch	Bush diameter	Width between inner plates	Pin diameter	Pin length		Inner plate depth	Plate thickness	Tensile strength	Average Tensile strength	Weight
	P	d1 max	b1 min	d2 max	L max	Lc max	h2 max	t/T max	Q min	Q o	q
	mm	mm	mm	mm	mm	mm	mm	mm	kN/lbf	kN	kg/m
P7	7.000	4.00	3.50	2.70	9.60	6.8	1.15	1.00	-	6.9/1551	0.31
P7F1	7.000	4.00	3.40	2.70	9.80	6.8	120	1.20	-	6.9/1551	0.33
05C	8.000	5.00	4.76	3.15	11.80	7.6	130	1.00	-	8.5/1932	0.35
06D	9.525	6.35	3.80	4.45	10.70	9.6	135	1.04	-	9.0/2024	0.41
06DTF1	9.525	6.35	5.72	4.45	14.25	9.6	130	1.30	-	14.5/3259	0.57
06DTF2	9.525	6.35	5.72	4.45	14.55	9.6	1.75	1.40	-	14.5/3259	0.60
06DF2-2	9.525	6.35	3.80	4.46	18.80	9.6	135/1.40	1.04	8.30	16.2/3641	0.76
06DF3-2	9.525	6.35	4.40	4.46	21.70	9.6	150	1.30	9.70	18.7/4203	0.86

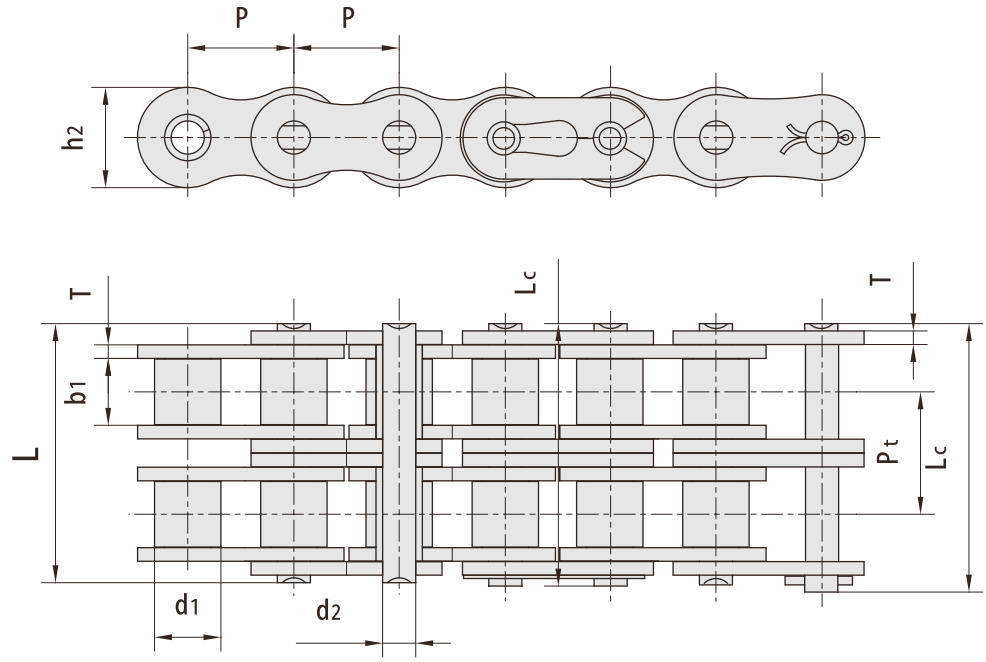

RBL chain number	Pitch	Roller diameter	Width between inner plates	Pin diameter	Pin length		Inner plate depth	Plate thickness	Transverse pitch	Tensile strength	Average Tensile strength	Weight
	P	b1 max	b1 min	d2 max	L max	Lc max	h2 max	t/T max	P t	Q min	Q o	q
	mm	mm	mm	mm	mm	mm	mm	mm	mm	kN/lbf	kN	kg/pc
4012	12.700	7.95	7.85	3.96	31.0	32.2	12.00	1.50	14.38	28.2,6409	35.9	0.16
4014	12.700	7.95	7.85	3.96	31.0	32.2	12.00	1.50	14.38	28.2,6409	35.9	0.19
4016	12.700	7.95	7.85	3.96	31.0	32.2	12.00	1.50	14.38	28.2,6409	35.9	0.21
5014	15.875	10.16	9.40	5.08	38.9	40.4	15.09	2.03	18.11	44.4/10091	58.1	0.49
5016	15.875	10.16	9.40	5.08	38.9	40.4	15.09	2.03	18.11	44.4/10091	58.1	0.56
5018	15.875	10.16	9.40	5.08	38.9	40.4	15.09	2.03	18.11	44.4/10091	58.1	0.63
6018	19.050	11.91	12.57	5.94	48.8	50.5	18.00	2.42	22.78	63.6/14455	82.1	1.00
6020	19.050	11.91	12.57	5.94	48.8	50.5	18.00	2.42	22.78	63.6/14455	82.1	1.11
6022	19.050	11.91	12.57	5.94	48.8	50.5	18.00	2.42	22.78	63.6/14455	82.1	1.22
8018	25.400	15.88	15.75	7.92	62.7	64.3	24.00	3.25	29.29	113.4/25773	141.8	2.35
8020	25.400	15.88	15.75	7.92	62.7	64.3	24.00	3.25	29.29	113.4/25773	141.8	2.62
8022	25.400	15.88	15.75	7.92	62.7	64.3	24.00	3.25	29.29	113.4/25773	141.8	2.88
10018	31.750	19.05	18.90	9.53	76.4	80.5	30.00	4.00	35.76	177.0/40227	219.4	4.95
10022	31.750	19.05	18.90	9.53	76.4	80.5	30.00	4.00	35.76	177.0/40227	219.4	4.95
12018	38.100	22.23	25.22	11.10	95.8	99.7	35.70	4.80	45.44	254.0,57727	314.9	8.14
12022	38.100	22.23	25.22	11.10	95.8	99.7	35.70	4.80	45.44	254.057727	314.9	8.14

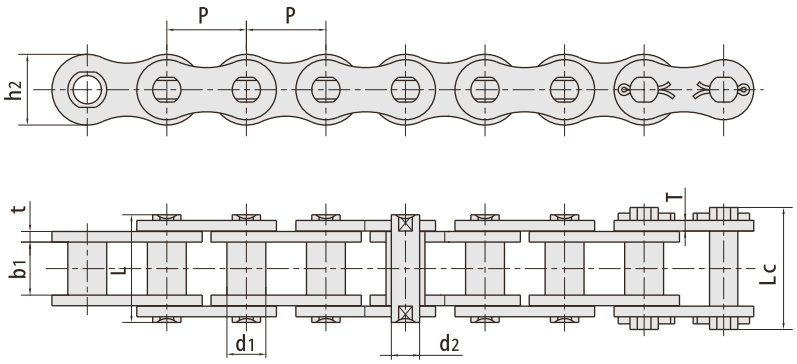

RBL chain number	Pitch	Bush diameter	Width between inner plates	Pin diameter	Pin length		Inner plate depth	Plate thickness	Tensile strength	Average Tensile strength	Weight
	P	d1 max	b1 min	d2 max	L max	Lc max	h2 max	t/T max	Q min	Q o	q
	mm	mm	mm	mm	mm	mm	mm	mm	kN/lbf	kN	kg/m
P15F1-B	15.00	9.00	14.0	6.0	25.3	30.0	14.0	2.03	12.5/2852.5	13.75	1.150
P20-B	20.00	12.00	16.0	8.0	33.0	36.0	18.0	3.00	25.0/5624	27.50	2.140
P20F3-B	20.00	12.00	16.0	8.0	33.0	36.0	19.0	3.00	25.0/5624	27.50	2.030
*PZ20-B	20.00	12.00	16.0	8.0	33.0	34.7	18.0	3.00	25.0/5624	27.50	2.253
P25-B	25.00	15.00	18.0	10.0	35.0	39.0	24.0	3.00	31.5/7086	34.70	3.170
P25F1-B	25.00	15.00	18.0	10.0	35.0	39.0	24.0	3.00	31.5/7086	34.70	2.670
P30F2-B	30.00	17.00	20.0	11.0	41.0	45.4	28.0	4.00	40.0/8998	44.00	4.250
P30F6-B	30.00	17.00	20.0	11.0	42.4	46.0	28.0	4.00	40.0/8998	44.00	3.750
P35F2-B	35.00	18.00	22.0	12.0	44.5	48.0	30.0	4.00	50.0/11248	55.00	4.330
P35F5-B	35.00	18.00	22.0	12.0	44.5	48.0	30.0	4.00	50.0/11248	55.00	3.770
P36-B	36.00	18.00	22.0	12.5	44.5	49.0	30.0	4.00	60.0/13497	66.00	4.200
P40-B	40.00	20.00	25.0	14.0	52.4	57.0	35.0	5.00	63.0/14172	69.30	5.430
P45-B	45.00	22.00	30.0	16.0	62.0	66.5	40.0	6.00	80.0/17996	88.00	7.540
P50-B	50.00	26.00	35.0	18.0	68.0	73.5	44.0	6.00	100.0/22495	110.00	8.900
P55-B	55.00	30.00	45.0	20.0	88.0	93.5	49.0	8.00	125.0/28119	137.50	13.920
P55F1-B	55.00	30.00	45.0	20.0	88.0	110.0	49.0	8.00	125.0/28119	137.50	13.920
P55F4-B	55.00	28.00	45.0	20.0	88.0	93.5	43.0	8.00	125.0/28100	137.50	12.400
P60-B	60.00	32.00	50.0	22.0	94.1	99.5	55.0	8.00	160.0/35993	176.00	15.200
P65-B	65.00	36.00	56.0	26.0	97.5	113.0	61.0	8.00	200.0/44960	220.00	18.900
P70-B	70.00	30.00	65.0	30.0	117.0	130.0	67.0	10.00	250.0/57050	275.00	26.270
P80-B	80.00	44.00	70.0	32.0	131.0	150.0	75.0	12.00	315.0/71883	346.00	31.800
P 19.05	19.05	12.70	12.5	7.5	31.6	33.6	20.0	4.15/3.25	50.0/11248	55.00	2.560
P19.05F50-B	19.05	11.91	12.9	7.5	31.6	34.8	20.0	4.15/3.25	40.0/8992	44.00	2.530
P22.225F10-B	22.225	14.30	14.6	9.0	36.3	39.3	23.5	4.8/4.0	55.0/12364	60.50	3.580
P22.225F3-B	22.225	15.60	14.6	9.0	36.3	38.0	23.5	4.8/4.0	75.0/16860	82.50	3.750
P25.4F21-B	25.40	15.88	16.0	10.0	42.5	-	26.8	5.6/4.8	80.0/17984	88.00	4.700
P31.75F5-B	31.75	19.05	20.0	11.1	46.0	50.0	33.5	5.6/4.8	100.0/22480	110.00	5.980
4'4227F1-B	42.27	13.00	22.9	7.92	41.0	45.8	24.0	3.20	42.3/9509	46.50	2.360
*P503F7	50.80	18.50	25.0	14.5	53.5	57.5	40.0	5.00	120.0/26994	132.00	6.300

Straight side plates

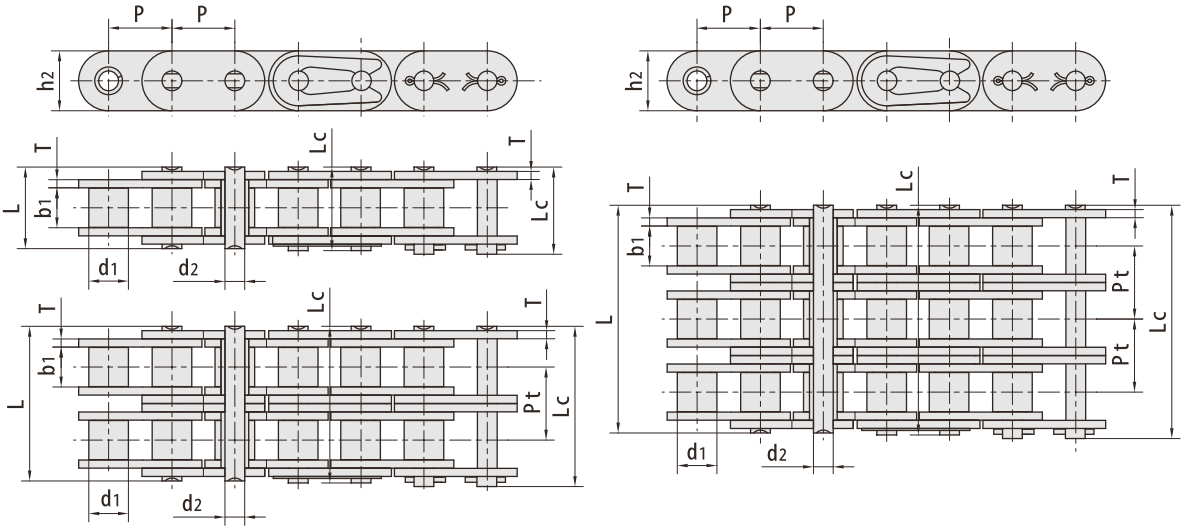

ISO chain number	ANSI RBL chain number	Pitch	Roller diameter	Width between inner plates	Pin diameter	Pin length		Inner plate depth	Plate thickness	Tensile strength	Average Tensile strength	Weight
		P	b1 max	b1 min	d2 max	L max	Lc max	h2 max	t/T max	Q min	Q o	q
		mm	mm	mm	mm	mm	mm	mm	mm	kN/lbf	kN	kg/pc
208A	A2040	25.40	7.95	7.85	3.96	16.6	17.8	12.0	1.50	14.1/3205	16.7	0.42
208B		25.40	8.51	7.75	4.45	16.7	18.2	11.8	1.60	18.0/4091	19.4	0.45
210A	A2050	31.75	10.16	9.40	5.08	20.7	22.2	15.0	2.03	22.2/5045	28.1	0.73
210B		31.75	10.16	9.65	5.08	19.5	20.9	14.7	1.70	22.4/5091	27.5	0.65
212A	A2060	38.10	11.91	12.57	5.94	25.9	27.7	18.0	2.42	31.8/7227	36.8	1.02
212B		38.10	12.07	11.68	5.72	22.5	25.2	16.0	1.85	29.0/6591	32.2	0.76
216A	A2080	50.80	15.88	15.75	7.92	32.7	36.5	24.0	3.25	56.7/12886	65.7	1.70
216B		50.80	15.88	17.02	8.28	36.1	39.1	21.0	4.15/3.1	60.0/13636	72.8	1.75
220A	A2100	63.50	19.05	18.90	9.53	40.4	44.7	30.0	4.00	88.5/20114	102.6	2.55
220B		63.50	19.05	19.56	10.19	41.3	45.0	26.4	4.5/3.5	95.0/14773	106.7	2.62
224A	A2120	76.20	22.23	25.22	11.10	50.3	54.3	35.7	4.80	127.0/28864	147.3	4.06
224B		76.20	25.40	25.40	14.63	53.4	57.8	33.2	6.0/4.8	160.0/36364	178.0	4.70
228B		88.90	27.94	30.99	15.90	65.1	69.5	36.7	7.5/6.0	200.0/45455	222.0	6.23
232B		101.60	29.21	30.99	17.81	66.0	71.0	42.0	7.0/6.0	250.0/56818	277.5	6.72
208AH	A2040H	25.40	7.95	7.85	3.96	18.8	19.9	12.0	2.03	14.1/3205	16.7	0.53
210AH	A2050H	31.75	10.16	9.40	5.08	22.1	23.8	15.0	2.42	22.2/5045	28.1	0.79
212AH	A2060H	38.10	11.91	12.57	5.94	29.2	31.0	18.0	3.25	31.8/7227	36.8	1.28
216AH	A2080H	50.80	15.88	15.75	7.92	36.2	39.4	24.0	4.00	56.7/12886	70.0	2.17
220AH	A2100H	63.50	19.05	18.90	9.53	43.6	47.2	30.0	4.80	88.5/20114	102.6	3.15
224AH	A2120H	76.20	22.23	25.22	11.10	53.5	57.5	35.7	5.60	127.0/28864	147.3	4.57

* bush chain: d1 the table indicates the external diameter of the bush.

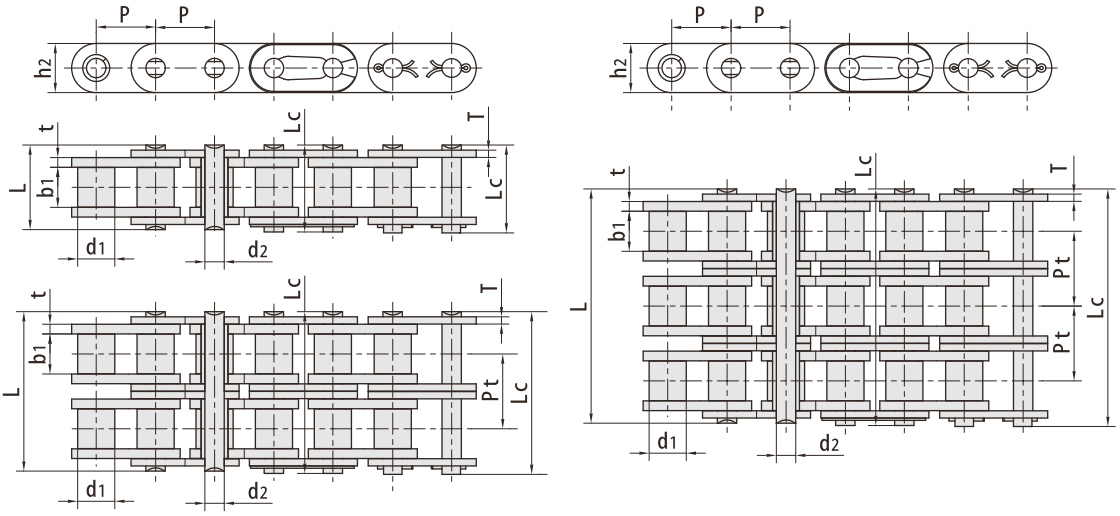

RBL chain number		Pitch	Roller diameter	Width between inner plates	Pin diameter	Pin length		Inner plate depth	Plate thickness	Transverse pitch	Tensile strength	Average Tensile strength	Weight
		P	b1 max	b1 min	d2 max	L max	Lc max	h2 max	t/T max	P t	Q min	Q o	q
		mm	mm	mm	mm	mm	mm	mm	mm	mm	kN/lbf	kN	kg/pc
	*C35-1	9.525	5.08	4.77	3.58	13.3	14.3	9.00	1.30		7.9/1795	10.8	0.41
C08A-1	C40-1	12.700	7.95	7.85	3.96	16.6	18.8	12.00	1.50		14.1/3273	17.5	0.73
C10A-1	C 50-1	15.875	10.16	9.40	5.08	20.7	23.3	15.09	2.03		22.2/5045	29.4	1.23
C12A-1	C60-1	19.050	11.91	12.57	5.94	25.9	28.3	18.0/18.2	2.42		31.8/7227	41.5	1.81/1.83
C16A-1	C80-1	25.400	15.88	15.75	7.92	32.7	36.5	24.00	3.25		56.7/12886	69.4	3.09
C20A-1	C100-1	31.750	19.05	18.90	9.53	40.4	44.7	30.00	4.00		88.5/20114	109.2	4.56
C24A-1	C120-1	38.100	22.23	25.22	11.10	50.3	54.3	35.70	4.80		127.0/28864	156.3	6.86
C28A-1	C140-1	44.450	25.40	25.22	12.70	54.4	59.0	41.00	5.60		172.4/39182	212.0	8.49
C32A-1	C160-1	50.800	28.58	31.55	14.27	64.8	69.6	47.80	6.40		226.8/51545	278.9	11.50
C08A-2	C40-2	12.700	7.95	7.85	3.96	31.0	33.2	12.00	1.50	14.38	28.2/6409	35.9	1.43
C10A-2	C50-2	15.875	10.16	9.40	5.08	38.9	41.4	15.09	2.03	18.11	44.4/10091	58.1	2.42
C12A-2	C60-2	19.050	11.91	12.57	5.94	48.8	51.1	18.0/18.2	2.42	22.78	63.6/14455	82.1	3.58/3.62
C16A-2	C80-2	25.400	15.88	15.75	7.92	62.7	65.8	24.00	3.25	29.29	113.4/25773	141.8	6.12
C20A-2	C100-2	31.750	19.05	18.90	9.53	76.4	80.5	30.00	4.00	35.76	177.0/40227	219.4	9.08
C24A-2	C120-2	38.100	22.23	25.22	11.10	95.8	99.7	35.70	4.80	45.44	254.0/57727	314.9	13.60
C28A-2	C140-2	44.450	25.40	25.22	12.70	103.3	107.9	41.00	5.60	48.87	344.8/78364	427.5	16.86
C32A-2	C160-2	50.800	28.58	31.55	14.27	123.3	128.1	47.80	6.40	58.55	453.6/103091	562.4	22.90
C08A-3	C40-3	12.700	7.95	7.85	3.96	45.4	47.6	12.00	1.50	14.38	42.3/9614	50.0	2.14
C10A-3	C50-3	15.875	10.16	9.40	5.08	57.0	59.5	15.09	2.03	18.11	66.6/15136	77.8	3.62
C12A-3	C60-3	19.050	11.91	12.57	5.94	71.5	73.9	18.0/18.2	2.42	22.78	95.4/21682	111.1	5.36/5.41
C16A-3	C80-3	25.400	15.88	15.75	7.92	91.7	95.1	24.00	3.25	29.29	170.1/38659	198.4	9.10
C20A-3	C100-3	31.750	19.05	18.90	9.53	112.2	116.3	30.00	4.00	35.76	265.5/60341	309.6	13.60
C24A-3	C120-3	38.100	22.23	25.22	11.10	141.4	145.2	35.70	4.80	45.44	381.0/86591	437.2	20.43
C28A-3	C140-3	44.450	25.40	25.22	12.70	152.2	156.8	41.00	5.60	48.87	517.2/117545	593.3	25.23
C32A-3	C160-3	50.800	28.58	31.55	14.27	181.8	186.6	47.80	6.40	58.55	680.4/154636	780.6	34.19

A1

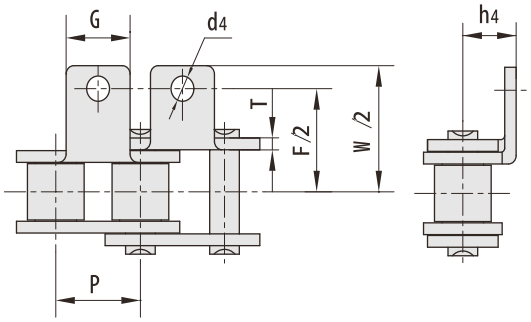

K1

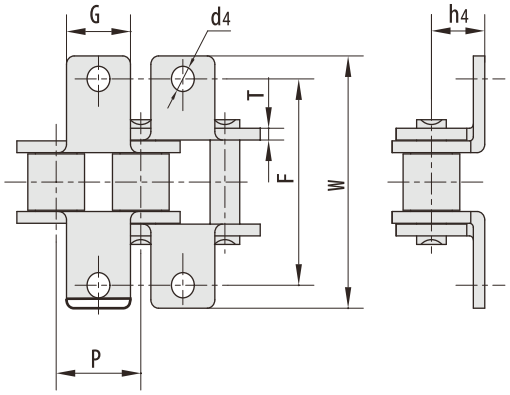

RBL chain number	P mm	G mm	F mm	W mm	T mm	h4 mm	d4 mm
25	6.350	5.6	13.80	23.2	0.80	4.30	3.4
35	9.525	7.9	19.00	28.6	1.30	6.35	3.4
40	12.700	9.5	25.40	35.2	1.50	7.90	3.4
41	12.700	9.5	24.00	33.4	1.30	6.90	3.6
50	15.875	12.7	31.75	46.2	2.03	10.30	5.5
60	19.050	15.9	38.10	55.6	2.42	11.90	5.5
80	25.400	19.1	50.80	64.8	3.25	15.90	6.8
100	31.750	25.4	63.50	89.8	4.00	19.80	9.2
120	38.100	28.6	76.20	108.5	4.80	23.00	9.8
140	44.450	34.9	88.90	123.0	5.60	28.60	11.4
160	50.800	38.1	101.60	142.8	6.40	31.75	13.1
200	63.500	50.8	127.00	179.0	8.00	42.88	16.3
06B	9.525	8.0	19.04	27.0	1.30	6.50	3.5
08B	12.700	9.5	25.40	36.4	1.60	8.90	4.5
10B	15.875	14.3	31.75	44.6	1.70	10.31	5.3
12B	19.050	16.0	38.10	52.4	1.85	13.46	6.4
16B	25.400	19.1	50.80	72.6	3.10	15.88	6.4
20B	31.750	35.0	63.50	100.5	3.50	19.80	9.0
24B	38.100	30.0	76.20	108.4	4.80	26.67	10.5
28B	44.450	35.0	88.90	123.0	6.00	28.58	13.1
32B	50.800	38.1	101.60	142.8	6.00	31.75	13.1

* straight side plates

Sa1 one side

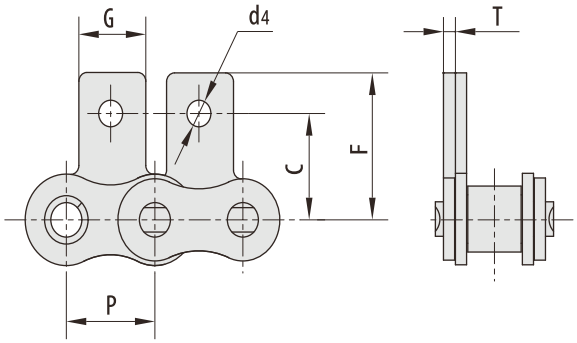

Sk1 both sides

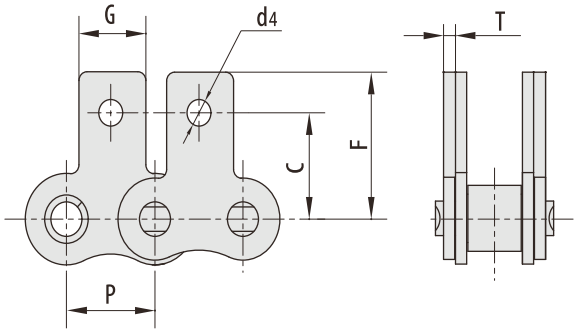

RBL chain number	P mm	G mm	F mm	W mm	T mm	d4 mm
25	6.350	5.6	13.80	23.2	0.80	3.4
35	9.525	7.9	19.00	28.6	1.30	3.4
40	12.700	9.5	25.40	35.2	1.50	3.4
41	12.700	9.5	24.00	33.4	1.30	3.6
50	15.875	12.7	31.75	46.2	2.03	5.5
60	19.050	15.9	38.10	55.6	2.42	5.5
80	25.400	19.1	50.80	64.8	3.25	6.8
100	31.750	25.4	63.50	89.8	4.00	9.2
120	38.100	28.6	76.20	108.5	4.80	9.8
140	44.450	34.9	88.90	123.0	5.60	11.4
160	50.800	38.1	101.60	142.8	6.40	13.1
200	63.500	50.8	127.00	179.0	8.00	16.3
06B	9.525	8.0	19.04	27.0	1.30	3.5
08B	12.700	9.5	25.40	36.4	1.60	4.5
10B	15.875	14.3	31.75	44.6	1.70	5.3
12B	19.050	16.0	38.10	52.4	1.85	6.4
16B	25.400	19.1	50.80	72.6	3.10	6.4
20B	31.750	35.0	63.50	100.5	3.50	9.0
24B	38.100	30.0	76.20	108.4	4.80	10.5
28B	44.450	35.0	88.90	123.0	6.00	13.1
32B	50.800	38.1	101.60	142.8	6.00	13.1

* straight side plates

Short pitch conveyor chain attachments

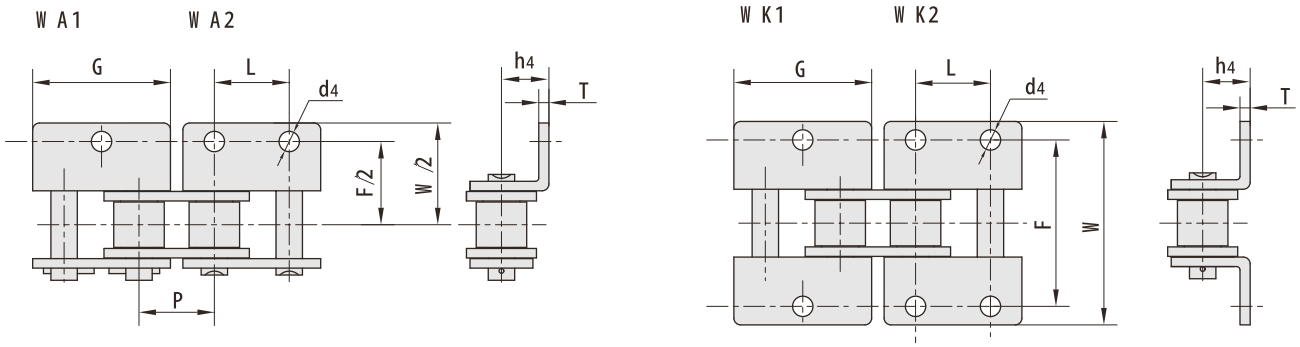

RBL chain number	P mm	G mm	L mm	F mm	W mm	T mm	h4 mm	d4 mm
25	6.350	11.41	6.350	13.80	23.2	0.80	4.30	3.40
35	9.525	17.32	9.525	19.00	28.6	1.30	6.35	2.80
40	12.700	23.00	12.700	25.40	35.6	1.50	7.90	3.40
41	12.700	22.30	12.700	24.00	35.0	1.30	7.20	4.85
50	15.875	28.80	15.875	31.75	46.8	2.03	10.30	5.50
60	19.050	34.65	19.050	38.10	56.4	2.42	11.90	5.50
80	25.400	45.90	25.400	50.80	73.2	3.25	15.90	6.80
100	31.750	57.65	31.750	63.50	89.8	4.00	19.80	9.20
120	38.100	69.30	38.100	76.20	108.8	4.80	23.00	9.80
140	44.450	80.45	44.450	88.90	123.0	5.60	28.60	11.40
160	50.800	92.00	50.800	101.60	142.8	6.40	31.75	13.10
200	63.500	115.50	63.500	127.00	179.0	8.00	42.88	16.30
06B	9.525	17.72	9.525	19.04	27.0	1.30	6.50	3.50
08B	12.700	24.00	12.700	25.40	36.4	1.60	8.90	4.30
10B	15.875	29.58	15.875	31.80	44.6	1.70	10.31	5.30
12B	19.050	34.05	19.050	38.10	52.4	1.85	13.46	6.40
16B	25.400	46.40	25.400	50.80	72.6	3.10	15.88	6.40
20B	31.750	58.10	31.750	63.50	100.5	3.50	19.80	9.00
24B	38.100	71.30	38.100	76.20	108.4	4.80	26.67	10.50
28B	44.450	81.10	44.450	88.90	123.0	6.00	28.58	13.10
32B	50.800	92.80	50.800	101.60	142.8	6.00	31.75	13.10

* Straight side plates

W SA1 W SA2

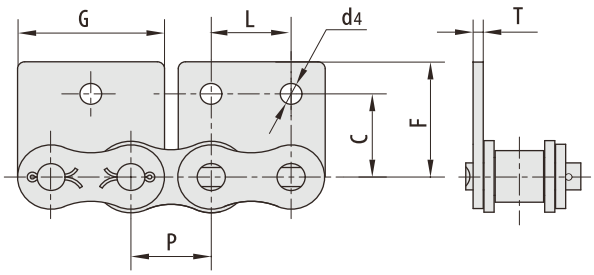

W SK1 W SK2

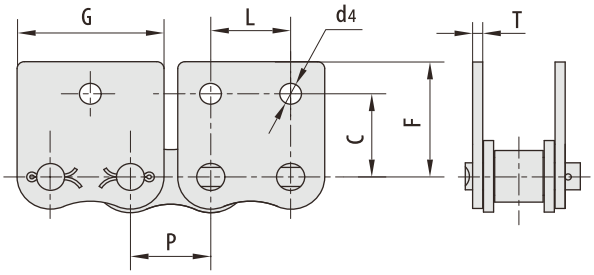

RBL chain number	P mm	G mm	L mm	C mm	F mm	T mm	d4 mm
25	6.350	11.41	6.350	7.95	11.70	0.80	3.4
35	9.525	17.32	9.525	9.50	14.55	1.30	2.8
40	12.700	23.00	12.700	12.70	17.40	1.50	3.4
41	12.700	21.20	12.700	11.85	16.55	1.30	3.6
50	15.875	28.80	15.875	15.90	23.05	2.03	5.5
60	19.050	34.65	19.050	18.30	26.86	2.42	5.5
80	25.400	45.90	25.400	24.60	35.45	3.25	6.8
100	31.750	57.65	31.750	31.80	44.00	4.00	9.2
120	38.100	69.30	38.100	36.50	51.60	4.80	9.8
140	44.450	80.45	44.450	44.50	62.00	5.60	11.4
160	50.800	92.00	50.800	50.80	69.85	6.40	13.1
200	63.500	115.5	63.500	63.50	88.90	8.00	16.3
06B	9.525	17.72	9.525	9.52	13.50	1.30	3.5
08B	12.700	23.30	12.700	13.35	18.90	1.60	4.3
10B	15.875	29.58	15.875	16.50	22.95	1.70	5.3
12B	19.050	34.05	19.050	21.45	28.60	1.85	6.4
16B	25.400	46.40	25.400	23.15	34.00	3.10	6.4
20B	31.750	58.10	31.750	30.50	45.70	3.50	9.0
24B	38.100	71.30	38.100	42.70	61.50	4.80	10.5

* Straight side plates

A1

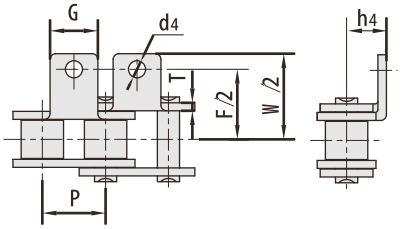

K1

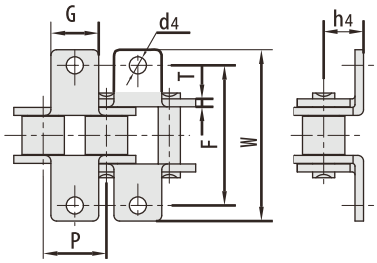

RBL chain number	P mm	G mm	F mm	W mm	T mm	h4 mm	d4 mm
04CA1F2	6.350	6.00	22.20	29.00	0.80	2.50	2.00
25K1F1	6.350	5.60	14.27	21.38	0.80	4.75	3.40
05BA1F1	8.000	8.00	14.00	21.00	0.80	5.00	3.10
*06BK1F3	9.525	8.00	18.81	26.81	1.15	6.50	3.50
'•06BK1F5	9.525	8.00	19.04	27.04	1.30	6.50	4.50
*06BK1F6	9.525	8.00	29.08	41.68	1.30	8.90	4.50
06CA1F1	9.525	7.90	19.20	28.80	1.30	6.35	2.80
06CA1F2	9.525	7.90	19.20	28.80	1.30	6.35	4.00
*C40A1F1	12.700	10.00	25.40	33.40	1.50	9.10	3.40
08AA1F1	12.700	9.50	38.50	44.50	1.50	8.20	3.60
08AA1F10	12.700	9.60	28.00	36.20	1.50	8.50	3.20
08AA1F12	12.700	9.50	25.40	35.20	1.50	7.90	3.20
08AA1F14	12.700	10.80	26.40	35.40	1.50	9.00	4.40
08AA1F15	12.700	18.00	26.40	39.00	1.50	9.00	4.20
08AA1F18	12.700	11.00	36.85	46.00	1.50	7.90	3.60
08AA1F2	12.700	9.50	25.40	35.20	1.50	7.90	4.85
08AA1F3	12.700	15.88	25.40	35.60	1.50	8.00	4.95
08AA1F6	12.700	9.50	25.40	35.20	1.50	7.90	5.00
08AA1F7	12.700	18.00	37.00	52.00	1.50	8.00	5.20
08AA1F9	12.700	9.60	55.40	62.50	1.50	7.50	4.20
08AK1F16	12.700	10.50	25.40	38.80	1.50	7.95	5.50
08AK1F2	12.700	9.50	25.40	35.20	1.50	7.90	4.85
08AK1F4	12.700	9.50	25.39	35.19	1.50	7.90	5.50
08BA1F11	12.700	11.00	25.40	36.40	1.60	8.90	4.30
08BA1F16	12.700	12.30	27.80	42.80	1.60	21.00	5.20
08BA1F18	12.700	9.50	28.30	37.00	1.60	8.00	4.30
08BA1F2	12.700	11.40	38.60	49.60	1.60	8.90	3.50
08BA1F20	12.700	12.60	22.95	33.95	1.60	10.20	5.00
08BA1F28	12.700	9.50	25.40	34.52	1.60	9.95	4.00
08BA1F30	12.700	11.00	26.23	35.43	1.60	9.00	4.50
08BA1F33	12.700	10.00	30.40	38.80	1.60	8.20	3.10
08BA1F34	12.700	9.60	36.40	48.00	1.60	9.60	3.20

* Straight side plates

A1

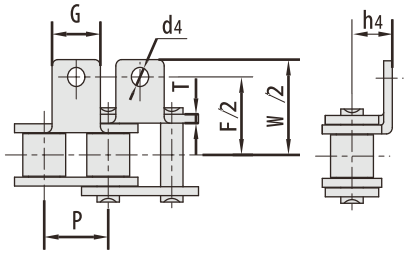

K1

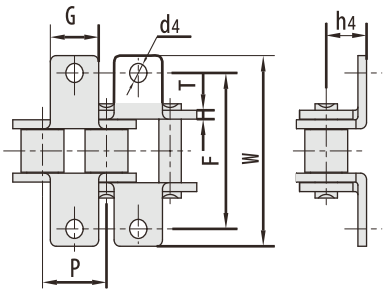

RBL chain number	P mm	G mm	F mm	W mm	T mm	h4 mm	d4 mm
08BA1F39	12.700	9.50	36.40	44.00	1.60	9.50	3.20
08BA1F40	12.700	9.50	26.60	34.20	1.60	8.50	3.20
08BA1F41	12.700	12.50	35.00	43.00	1.60	9.00	3.70
08BA1F47	12.700	9.50	26.60	32.60	1.60	8.50	3.10
08BA1F48	12.700	13.00	38.20	48.60	1.60	10.50	6.10
08BA1F49	12.700	12.00	26.00	38.80	1.60	8.00	3.50
08BA1F51	12.700	9.50	25.40	35.20	1.60	8.90	4.30
08BA1F53	12.700	11.00	26.00	36.40	1.60	8.90	6.5X4.5
08BA1F56	12.700	9.50	34.20	43.70	1.60	9.00	3.10
08BA1F58	12.700	9.50	47.00	57.50	1.60	8.90	4.50
08BA1F6	12.700	18.00	25.80	37.80	1.60	8.00	4.20
08BA1F8	12.700	11.20	21.85	32.85	2.50	8.90	4.30
08BA3F1	12.700	22.70	33.20	46.90	1.60	7.80	2.9/G.7
08BF30	12.700	18.00	27.20	40.00	1.60	8.00	4.30
08BF33	12.700	9.50	27.74	38.80	1.60	8.50	3.10
08BK1F10	12.700	11.00	27.77	38.77	1.55	8.75	4.30
08BK1F14	12.700	11.00	25.57	36.57	1.60	8.90	6.50
08BK1F15	12.700	17.90	27.60	39.60	1.60	8.00	7.10
08BK1F26	12.700	11.00	26.50	36.00	1.60	8.80	4.40
08BK1F29	12.700	12.50	26.20	38.00	1.60	10.00	4.50
08BK1F35	12.700	9.50	25.33	35.03	1.60	8.90	M 3
08BK1F43	12.700	9.50	28.20	37.20	1.60	8.40	4.30
08BK1F44	12.700	11.50	26.00	36.00	1.60	8.50	4.20
08BK1F5	12.700	9.50	29.00	38.70	1.60	7.10	4.50
08BK1F54	12.700	14.00	30.20	42.00	1.60	8.90	5.50
08BK1F55	12.700	12.00	25.40	36.40	1.60	8.90	5.00
08BK1F57	12.700	12.00	25.40	36.40	1.60	8.90	5.50
08BK1F7	12.700	9.50	29.00	39.00	1.60	7.00	4.50
08BK1F9	12.700	9.50	25.40	36.40	1.60	8.90	M 4
428HK1F3	12.700	11.50	30.00	43.50	2.03	8.90	5.50
*C 10BK0F1	15.875	13.00	-	35.00	1.70	10.30	-
10AA1F10	15.875	12.70	31.80	46.20	2.03	10.30	N 5
10AA1F11	15.875	12.70	31.80	46.20	2.03	25.30	5.50

* Straight side plates

A1

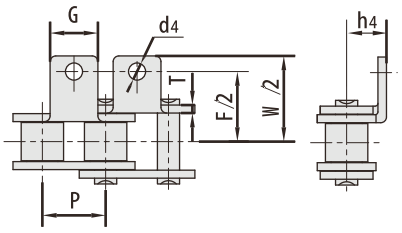

K1

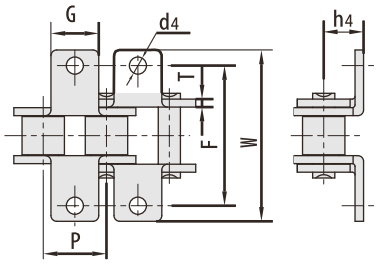

RBL chain number	P mm	G mm	F mm	W mm	T mm	h4 mm	d4 mm
10AA1F13	15.875	14.00	33.20	50.40	2.03	11.50	3.10
10AA2F1	15.875	24.10	33.60	43.20	2.03	8.20	3.50
10AHK1F1	15.875	12.70	34.00	48.40	2.42	10.30	M 5
10AHK1F2	15.875	12.70	33.00	47.40	2.42	10.40	M 5
10AK1F23	15.875	20.00	32.16	48.06	2.03	10.90	6.50
10AK1F24	15.875	12.70	31.75	46.20	2.03	10.30	5.20
10AK1F3	15.875	14.29	31.75	46.20	2.03	10.30	5.50
10AK1F5	15.875	20.00	39.00	50.10	2.03	12.50	M 5
10AK1F7	15.875	12.70	31.80	46.20	2.03	10.30	M 6
10AK1F8	15.875	12.70	31.80	46.20	2.03	10.30	6.50
10AK1F9	15.875	20.00	38.97	50.07	2.03	12.50	5.50
10BA0F2	15.875	14.00	-	49.41	1.70	10.30	-
10BA0F3	15.875	14.00	-	46.51	1.70	10.40	-
10BA1F11	15.875	15.00	31.80	49.60	1.70	10.30	M 5
10BA1F13	15.875	14.10	30.81	48.01	1.70	10.50	M 5
10BA1F14	15.875	14.30	31.76	44.60	1.70	10.31	6.40
10BF11	15.875	14.00	-	51.81	1.70	10.40	-
10BK0F4	15.875	14.00	-	45.81	1.70	10.30	-
10BK0F5	15.875	15.00	-	69.20	1.70	10.31	-
10BK1F12	15.875	13.00	32.41	50.11	1.70	11.00	6.00
10BK1F17	15.875	14.30	31.80	44.60	1.70	10.31	7.3 X 5.5
10BK1F18	15.875	14.00	32.78	49.96	1.70	11.50	3.10
10BK1F19	15.875	12.80	32.00	46.60	1.70	10.60	M 6
10BK1F2	15.875	13.00	32.40	45.20	1.70	11.00	6.00
10BK1F21	15.875	14.00	35.00	50.80	1.70	9.00	7.10
10BK1F22	15.875	14.10	31.80	47.60	1.70	10.40	5.20
10BK1F3	15.875	13.00	32.41	51.11	1.70	10.50	6.00
10BK1F4	15.875	17.50	30.41	47.41	1.70	11.50	6.00
10BK1F5	15.875	13.00	29.41	42.21	1.70	10.00	5.50
10BK1F6	15.875	12.70	30.00	47.00	1.70	10.20	5.30
10BK1F7	15.875	14.00	31.50	49.60	1.70	10.30	5.50
10BK1F8	15.875	14.00	31.41	48.31	1.70	10.50	5.30
10BSBA1F2	15.875	13.50	30.00	44.40	1.70	10.50	5.30

A1

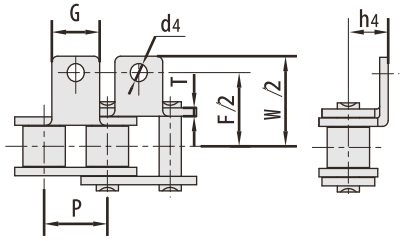

K1

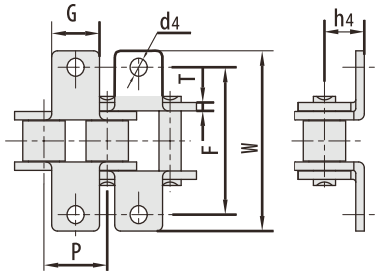

RBL chain number	P mm	G mm	F mm	W mm	T mm	h4 mm	d4 mm
500RA1F14	15.875	12.70	34.40	48.80	2.03	10.30	5.20
*C12BA1F26	19.050	16.00	37.60	56.00	1.85	13.50	7.20
12AA1F10	19.050	15.90	38.10	55.60	2.42	11.90	7.00
12AA1F32	19.050	25.00	44.84	58.84	2.42	21.00	5.50
12AA1F33	19.050	15.90	38.10	55.60	2.42	11.90	6.30
12AA1F7	19.050	15.90	38.10	55.50	2.42	11.90	6.00
12AA2F11	19.050	21.00	40.00	51.20	2.42	11.90	5.30
12AK1F1	19.050	15.90	40.00	55.60	2.42	11.90	6.20
12AK1F22	19.050	15.90	38.10	55.50	2.42	13.46	M 5
12AK1F27	19.050	15.90	60.80	78.20	2.42	11.90	6.35
12AK1F28	19.050	15.90	38.10	55.60	2.42	11.90	8.50
12AK1F30	19.050	15.90	38.20	55.60	2.42	11.90	6.50
12AK1F31	19.050	25.00	45.50	64.50	2.42	11.90	8.20
12AK1F34	19.050	15.90	38.10	55.60	2.42	11.90	M 6
12AK1F36	19.050	15.90	38.10	55.60	2.42	11.90	M 4
12AK1F4	19.050	15.90	38.10	55.50	2.42	11.90	M 5
12AK1F7	19.050	15.90	38.10	55.60	2.42	11.90	6.00
12AK1F8	19.050	15.90	40.00	55.60	2.42	11.90	6.80
12BA0F1	19.050	36.10	-	56.75	1.85	12.00	-
12BA0F3	19.050	33.60	-	56.80	1.85	11.50	-
12BA1F1	19.050	16.00	38.10	52.40	1.85	13.46	8.20
12BA1F12	19.050	18.00	35.20	52.70	1.85	12.20	6.40
12BA1F18	19.050	24.00	35.45	51.75	1.85	12.00	6.60
12BA1F23	19.050	18.00	36.00	56.60	1.85	11.00	M 6
12BA1F30	19.050	20.00	45.70	65.60	1.80	12.00	6.40
12BA1F34	19.050	15.90	34.25	55.60	1.85	11.90	10.9X6.4
12BFK1	19.050	16.50	40.00	54.80	1.85	12.00	6.60
12BK1F10	19.050	20.50	40.00	54.50	1.85	12.00	8.50
12BK1F11	19.050	16.00	38.15	52.55	1.85	13.46	10.00
12BK1F13	19.050	16.00	40.00	60.00	2.03	11.90	6.50
12BK1F15	19.050	18.00	37.00	54.60	1.85	12.20	6.40
12BK1F17	19.050	16.00	35.64	55.24	1.85	11.90	6.70
12BK1F19	19.050	18.00	36.00	55.40	1.85	12.00	6.60
12BK1F2	19.050	16.00	38.10	52.40	1.85	13.46	8.00

* Straight side plates

A1

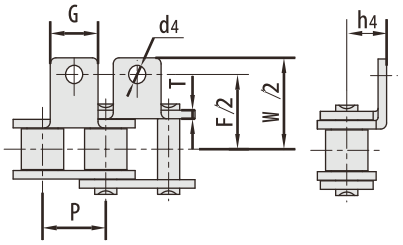

K1

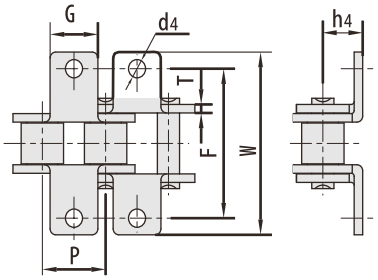

RBL chain number	P mm	G mm	F mm	W mm	T mm	h4 mm	d4 mm
12BK1F20	19.050	16.00	35.20	51.40	1.85	12.00	7.60
12BK1F24	19.050	18.50	37.20	58.00	1.85	11.00	M 6
12BK1F27	19.050	16.00	28.00	37.60	1.85	12.20	5.00
12BK1F28	19.050	16.00	41.00	54.65	1.85	10.00	6.40
12BK1F29	19.050	16.00	40.00	54.40	1.85	13.40	6.30
12BK1F31	19.050	20.00	44.80	64.80	1.85	11.70	6.50
12BK1F32	19.050	18.00	35.80	55.50	1.85	12.00	10.00
12BK1F33	19.050	16.00	38.10	52.40	1.85	13.46	8.10
12BK1F37	19.050	16.00	28.00	42.00	1.85	13.00	4.50
12BK1F38	19.050	16.00	38.10	52.44	1.85	13.46	7.20
12BK1F4	19.050	16.00	38.10	52.40	1.85	13.46	6.40
12BK1F40	19.050	18.00	35.44	54.94	1.80	11.60	6.40
12BK1F41	19.050	16.00	35.00	51.60	1.85	12.00	5.60
12BK1F5	19.050	18.00	35.44	54.05	1.80	11.60	6.40
12BK1F6	19.050	16.00	35.00	52.40	1.85	13.46	6.40
12BK1F8	19.050	18.00	35.20	50.40	1.85	12.20	6.40
12BK1F9	19.050	16.00	24.80	39.00	1.85	13.46	6.40
*C16BK1F40	25.400	16.00	37.60	56.00	1.85	13.50	7.20
16AA1F12	25.400	19.10	44.00	64.80	3.25	15.90	6.00
16AA1F19	25.400	24.00	50.80	72.80	3.25	15.90	9.00
16AA1F36	25.400	19.10	50.80	64.80	3.25	15.90	8.00
16AA1F4	25.400	19.10	50.80	64.80	3.25	15.90	6.00
16AA1F43	25.400	19.10	50.80	64.80	3.25	15.90	8.20
16AHA1F1	25.400	36.50	52.80	85.80	4.00	15.90	8.90
16AHK1F10	25.400	29.00	50.80	70.60	4.00	19.10	8.20
16AHK1F11	25.400	29.00	58.00	82.60	4.00	16.90	8.10
16AHK1F12	25.400	19.10	50.80	70.60	4.00	19.10	8.50
16AK1F10	25.400	19.10	50.80	64.80	3.25	15.90	10.00
16AK1F14	25.400	19.10	50.71	64.71	3.25	15.90	7.00
16AK1F17	25.400	19.10	50.80	78.60	3.25	15.90	6.80
16AK1F2	25.400	38.10	50.71	73.11	3.25	15.90	7.00
16AK1F3	25.400	30.00	56.30	82.40	3.25	16.00	6.50

* Straight side plates

A1

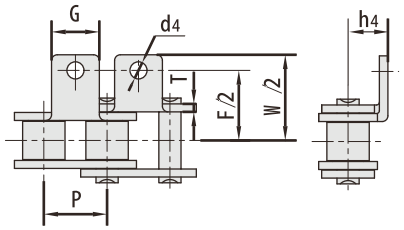

K1

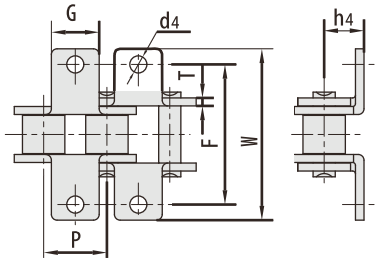

RBL chain number	P mm	G mm	F mm	W mm	T mm	h4 mm	d4 mm
16AK1F39	25.400	19.10	50.80	64.80	3.25	15.90	5.00
16AK1F40	25.400	19.10	50.80	64.80	3.25	15.90	8.60
16AK1F42	25.400	19.10	50.80	73.20	3.25	15.90	6.80
16AK1F5	25.400	25.40	44.00	56.00	3.25	15.90	6.00
16AK1F6	25.400	24.00	44.00	56.00	3.25	15.90	6.00
16AK1F8	25.400	25.00	57.80	74.90	3.25	14.50	6.80
16BA1F51	25.400	24.00	57.60	82.60	3.10	17.00	9.00
16BA1F7	25.400	24.00	58.00	75.60	3.10	18.00	9.00
16BK1F10	25.400	24.00	53.58	77.58	3.00	16.30	8.20
16BK1F11	25.400	26.00	58.00	74.60	4.00	18.00	9.00
16BK1F13	25.400	25.00	58.00	84.40	3.10	18.00	9.00
16BK1F15	25.400	25.00	68.00	130.00	3.10	17.00	9.10
16BK1F16	25.400	23.80	58.00	83.80	1.85	17.00	8.40
16BK1F17	25.400	25.00	50.80	70.20	4.15	20.20	9.10
16BK1F19	25.400	24.00	57.15	75.00	4.15	18.00	9.00
16BK1F22	25.400	18.00	54.60	72.00	3.10	18.00	10.00
16BK1F28	25.400	25.00	57.80	83.60	3.10	18.00	9.00
16BK1F3	25.400	19.10	50.80	72.60	3.10	15.88	8.20
16BK1F34	25.400	25.40	50.80	72.10	3.10	15.88	M 6
16BK1F4	25.400	36.00	54.00	78.60	3.10	16.00	8.20
16BK1F41	25.400	24.00	57.62	75.62	3.10	20.20	8.40
16BK1F42	25.400	24.00	57.72	75.72	3.10	16.50	9.00
16BK1F43	25.400	24.00	58.00	75.60	3.10	18.00	10.00
16BK1F44	25.400	25.00	58.00	84.40	3.10	18.00	10.20
16BK1F45	25.400	23.80	58.00	83.82	3.10	17.00	8.00
16BK1F46	25.400	36.00	54.00	78.60	3.10	16.00	8.40
16BK1F47	25.400	36.00	54.00	78.60	3.10	16.00	10.00
16BK1F48	25.400	19.05	54.43	72.80	3.10	16.00	12.6X9.0
16BK1F49	25.400	19.10	50.80	72.60	4.15	15.88	8.20
16BK1F5	25.400	25.00	57.80	83.60	3.10	19.00	9.00
16BK1F52	25.400	40.00	59.58	83.00	3.10	16.85	8.60
16BK1F53	25.400	24.00	58.00	79.60	3.10	18.00	9.00
16BK1F54	25.400	25.00	62.12	88.32	3.10	18.00	9.00
16BK1F56	25.400	19.00	50.80	74.80	3.10	15.90	6.80
20AHK1F1	31.750	25.40	61.08	87.675	4.80	19.81	10.30
20AK1F2	31.750	25.40	53.25	77.15	6.00	19.84	8.20

A1

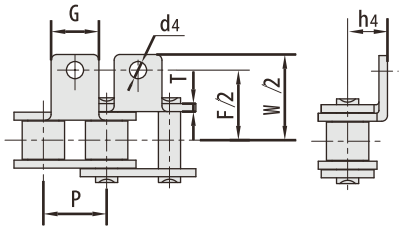

K1

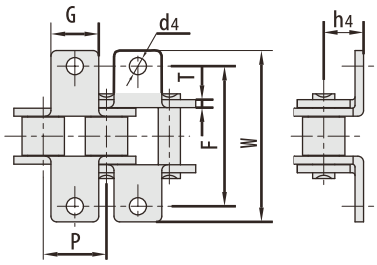

RBL chain number	P mm	G mm	F mm	W mm	T mm	h4 mm	d4 mm
20AK1F3	31.750	25.40	63.50	87.30	4.00	19.80	8.70
20AK1F4	31.750	25.40	63.50	89.80	4.00	19.80	8.20
20AK1F5	31.750	26.00	68.00	88.00	4.00	23.50	11.0X8.6
20AK1F7	31.750	25.40	63.50	89.60	4.00	19.80	9.20
20AK1F9	31.750	25.40	63.50	89.60	4.00	19.80	10.50
20BA1F6	31.750	35.00	63.50	100.50	3.50	19.80	11.00
20BA2F7	31.750	58.10	63.40	100.40	3.50	19.80	10.50
20BK1F2	31.750	26.00	68.00	88.00	4.50	23.50	9.60
20BK1F4	31.750	25.40	63.50	100.50	3.50	19.80	9.00
20BK1F5	31.750	35.00	65.00	94.20	3.50	19.80	12.50
20BK1F7	31.750	35.00	70.00	100.50	3.50	22.00	8.50
20BK1F8	31.750	35.00	67.00	104.00	3.50	18.00	9.00
*C24BK0F1	38.100	30.00	-	118.00	6.00	25.00	-
*24BK1F1	38.100	30.00	77.00	108.40	6.00	25.00	10.50
24AA1F1	38.100	28.60	76.20	111.60	4.80	23.80	9.80
24AA1F10	38.100	38.00	88.20	128.00	4.80	27.40	10.50
24AA1F12	38.100	28.40	75.40	99.60	4.80	23.00	10.30
24AA1F14	38.100	28.60	76.20	108.50	4.80	23.00	10.30
24AA1F3	38.100	45.00	110.00	138.00	10.00	30.00	14.00
24AK1F11	38.100	28.60	76.20	108.50	4.80	23.00	M 4
24AK1F4	38.100	28.60	88.90	108.80	4.80	23.00	12.00
24AK1F6	38.100	45.00	100.00	128.00	8.00	30.00	12.00
24AK1F7	38.100	30.00	77.00	101.60	4.80	30.00	11.00
24BK1F2	38.100	38.00	88.00	128.00	4.80	25.00	11.00
28AK1F6	44.450	35.50	88.90	107.70	5.60	28.60	11.40
28BF5	44.450	55.00	120.00	148.00	10.00	30.00	14.00
28BF6	44.450	55.00	120.00	154.00	10.00	30.00	20X14
28BK1F2	44.450	55.00	120.00	148.00	10.00	30.00	14.00
28BK1F3	44.450	74.00	108.00	155.00	6.00	32.00	13.00
28BK1F4	44.450	35.00	107.00	158.00	6.00	32.00	14.00
32AK1F1	50.800	38.10	101.60	142.80	6.40	31.75	14.30
32BK1F1	50.800	50.80	108.00	152.60	6.00	35.00	14.00
36AK1F1	57.150	40.00	114.30	144.30	7.20	42.00	15.00
40BK1F1	63.500	40.00	140.00	173.40	8.00	48.825	13.00

* Straight side plates

SA1

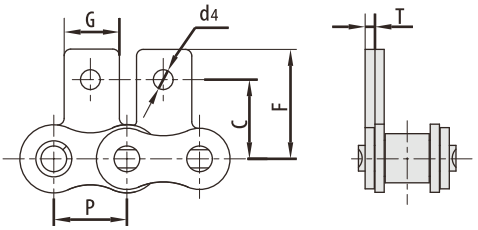

SK1

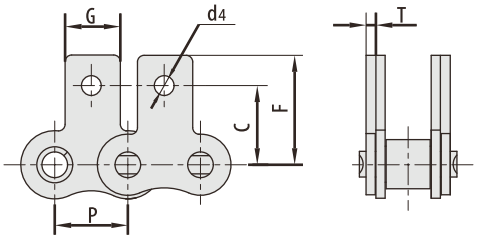

RBL chain number	P mm	G mm	C mm	F mm	T mm	d4 mm
05BSA1F1	8.000	8.00	8.00	11.50	0.80	3.10
05BSK1F2	8.000	8.00	7.50	11.50	0.80	3.00
*06BS A0F2	9.525	8.00	-	22.10	1.30	-
*06BSK1 F2	9.525	8.00	9.50	13.50	1.15	3.50
06CSA0	9.525	17.32	-	14.55	1.30	-
35SK1F1	9.525	7.90	9.50	14.55	1.30	4.00
*C08BSA1F21	12.700	9.50	13.35	18.90	1.60	5.30
08ASA1F2	12.700	9.50	8.73	17.50	1.50	4.76
08ASA1F3	12.700	9.60	12.70	17.30	1.50	3.60
08ASA1F4	12.700	9.50	12.70	19.05	1.50	4.20
08A5K0F1	12.700	9.50	-	22.23	1.50	-
08BA1F52	12.700	9.50	-	15.00	1.60	-
08BHSK1F1	12.700	11.00	13.35	18.90	2.03	6.50
08BSA0F1	12.700	11.00	-	19.00	1.60	-
08BSA1F1	12.700	18.00	15.00	21.50	1.60	6.30
08BSA1F19	12.700	18.00	15.00	21.50	1.60	8.00
08BSA1F32	12.700	11.00	14.30	20.00	1.60	6.35
08BSA1F8	12.700	12.50	14.70	20.30	1.60	4.50
08BSA1F9	12.700	12.50	14.70	20.30	1.60	4.50
08BSK0F4	12.700	11.00	-	45.00	1.60	-
08BSK0F7	12.700	10.00	-	23.80	1.60	-
08BSK1F12	12.700	12.50	14.70	20.30	1.60	5.00
08BSK1F2	12.700	11.00	13.40	18.90	1.60	4.30
08BSK1F22	12.700	11.00	13.00	20.80	1.60	4.45
08BSK1F3	12.700	11.00	14.10	19.50	1.55	4.30
08BSK1F34	12.700	9.50	14.10	19.20	1.60	4.30

* Straight side plates

SA1

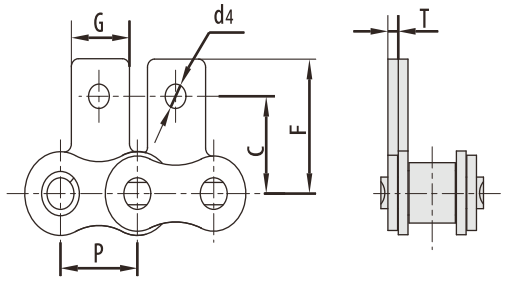

SK1

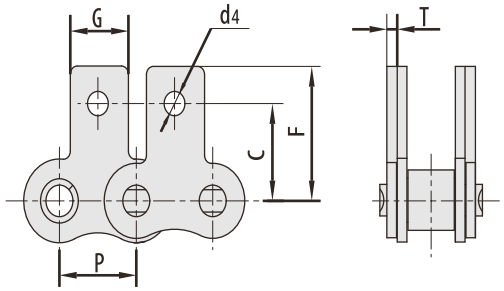

RBL chain number	P mm	G mm	C mm	F mm	T mm	d4 mm
08BSK1F4	12.700	11.00	13.35	18.90	1.60	6.50
08BSK1F5	12.700	9.50	13.35	18.90	1.60	6.30
08BSK1F6	12.700	11.00	14.30	19.30	1.60	4.30
08BSK1F7	12.700	11.00	13.00	20.80	1.60	4.45
41SK1F3	12.700	9.50	11.85	16.55	1.30	6.20
10ASA0F2	15.875	28.50	-	93.00	2.03	-
10ASA1F8	15.875	12.70	15.90	25.25	2.03	8.00
10ASK1F1	15.875	20.00	15.68	22.88	2.03	8.50
10ASK1F3	15.875	12.70	15.25	23.60	2.03	5.30
10ASK1F6	15.875	12.70	15.90	25.25	2.03	6.10
1CBSA0F1	15.875	8.22	-	29.52	1.70	-
10BSA1F3	15.875	24.00	16.00	24.20	1.70	5.10
10BSK1F5	15.875	14.10	15.90	23.70	1.70	5.20
*C12ASK1F6	19.050	15.75	17.78	25.50	2.42	5.70
12ASA1F4	19.050	15.90	18.30	29.33	2.42	8.50
12ASK1F1	19.050	15.90	18.30	29.33	2.42	6.10
12BSA1F3	19.050	17.00	16.00	26.60	1.85	8.00
12BSA1F4	19.050	18.00	17.00	27.00	1.85	8.00
12BSK0F1	19.050	15.00	-	26.50	1.85	-
12BSK0F4	19.050	15.90	-	26.00	3.30	-
12BSK1F1	19.050	18.00	18.20	28.10	1.80	6.40
12BSK1F2	19.050	18.00	18.30	26.10	1.85	6.20
12BSK1F6	19.050	18.00	18.20	28.10	1.80	6.40
12BSK1F7	19.050	16.00	17.90	26.20	1.85	5.60
*C16ASA2F1	25.400	49.40	29.50	39.50	3.25	5.50
*C16BSK0F1	25.400	25.00	-	25.00	4.15	-

* Straight side plates

SA1

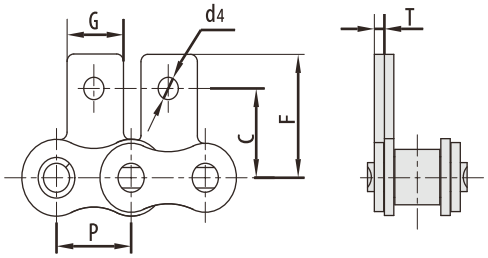

SK1

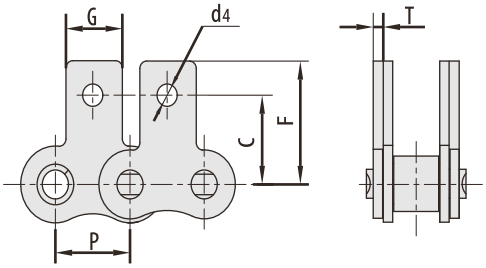

RBL chain number	P mm	G mm	C mm	F mm	T mm	d4 mm
*C16BSK0F3	25.400	23.94	-	22.20	3.10	-
*C16BSK0F4	25.400	46.90	-	20.50	3.10	-
16ASAF1	25.400	19.10	-	34.70	3.25	-
16ASAF2	25.400	19.10	-	34.70	3.25	-
16AW SK1F3	25.400	45.90	16.00	34.40	3.25	14.52
16BSA1F6	25.400	25.40	27.30	36.00	3.10	8.40
16BSK1F10	25.400	36.20	24.60	36.60	3.10	8.20
16BSK1F11	25.400	19.00	26.00	35.00	3.10	6.80
16BSK1F2	25.400	24.00	25.40	37.40	3.00	8.20
16BSK1F3	25.400	19.10	23.15	34.00	3.10	9.00
16BSK1F7	25.400	19.10	23.15	34.00	3.10	8.00
16BSK1F8	25.400	24.00	31.00	41.00	3.10	10.00
16BSK1F9	25.400	24.00	31.10	39.10	3.10	9.00
16BW SK0F8	25.400	47.00	-	38.00	4.15	-
20BSK1F1	31.750	25.40	30.50	45.70	3.50	9.00
24ASK1F3	38.100	28.60	34.40	50.70	4.80	9.80
24ASK1F4	38.100	28.60	36.50	51.60	4.80	10.30
24BSK1F1	38.100	30.00	42.65	61.70	4.80	10.50
24BSK1F2	38.100	36.00	43.20	61.50	4.80	20.3/11.6
24BSK1F4	38.100	30.00	36.50	51.40	4.80	10.50
28SK1F1	44.450	41.00	44.50	62.00	6.00	16.00
32ASW A2F1	50.800	92.00	48.90	69.50	6.40	13.10
32BSK1F1	50.800	50.80	53.50	77.00	6.00	14.00
40ASA1F2	63.500	63.50	40.00	56.00	8.00	22.00
40BSK1F1	63.500	56.00	48.00	68.00	8.50	16.20

* Straight side plates

WA1 WA2

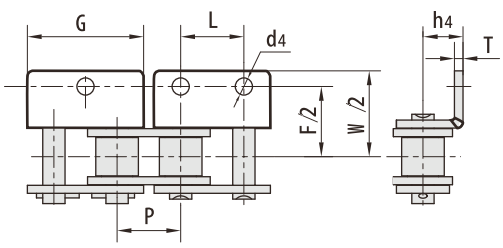

WK1 WK2

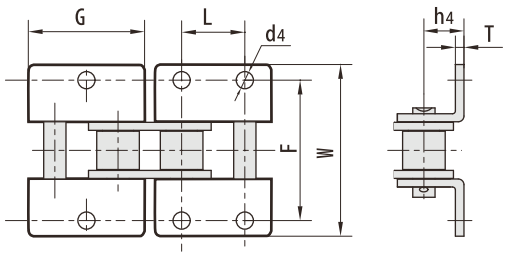

RBL chain number	P mm	G mm	L mm	F mm	W mm	T mm	h4 mm	d4 mm
*06BK2F2	9.525	17.75	9.520	18.80	26.80	1.15	6.50	3.50
*06BWK2F1	9.525	17.70	9.525	19.50	28.50	1.30	6.70	4.10
06CK2F4	9.525	18.50	9.525	19.10	28.60	1.30	6.45	5.00
08AWA1F2	12.700	24.00	-	56.40	68.60	2.00	9.60	5.10
08AWA2F2	12.700	23.00	12.700	25.40	35.60	1.50	7.90	3.60
08AWK1F1	12.700	23.00	-	25.40	35.60	1.50	7.90	4.20
08AWK1F2	12.700	23.00	-	25.40	35.60	1.50	7.90	M5
08AWK1F3	12.700	23.00	-	25.52	35.72	1.50	7.90	5.50
08BWK2F30	12.700	23.30	12.700	28.18	37.18	1.60	8.40	4.30
08BA1F45	12.700	18.00	-	27.60	39.60	1.60	8.00	4.30
08BF30WK2	12.700	23.00	12.700	42.00	52.30	1.60	6.50	5.15
08BK2F30	12.700	23.30	12.700	28.20	37.20	1.60	8.40	4.30
08BWA1F1	12.700	23.30	-	27.40	38.80	1.60	8.00	4.30
08BWA1F16	12.700	23.10	-	26.00	36.40	1.60	8.90	6.5X4.5
08BWA1F17	12.700	25.00	-	30.00	45.00	1.60	10.00	8.00
08BWA1F18	12.700	23.30	-	25.50	35.20	1.60	8.90	6.00
08BWA1F19	12.700	24.00	-	25.40	36.60	1.60	7.00	M5
08BWA1F6	12.700	24.00	-	25.40	38.80	1.60	8.90	6.60
08BWA2F25	12.700	24.50	12.700	25.40	35.20	1.60	8.90	4.50
08BWA2F30	12.700	23.30	12.700	30.00	42.00	1.60	8.50	4.30
08BWA2F31	12.700	23.30	14.000	25.40	43.00	1.60	8.90	4.00
08BWA2F33	12.700	23.30	12.700	27.60	40.80	1.60	8.50	4.30
08BWA2F34	12.700	23.60	12.700	32.60	44.60	1.60	9.50	4.20
08BWA2F4	12.700	24.00	12.700	25.40	36.40	1.60	8.90	4.30
08BWA2F6	12.700	25.00	12.500	26.00	35.60	1.60	8.90	4.50
08BWK1F10	12.700	24.00	-	62.83	75.43	2.00	10.00	5.00
08BWK1F11	12.700	23.30	-	25.40	35.20	1.60	8.90	5.00
08BWK1F12	12.700	23.30	-	25.40	35.10	1.60	8.90	M5
08BWK2F2	12.700	23.20	12.700	28.40	42.60	3.00	8.50	5.40

* Straight side plates

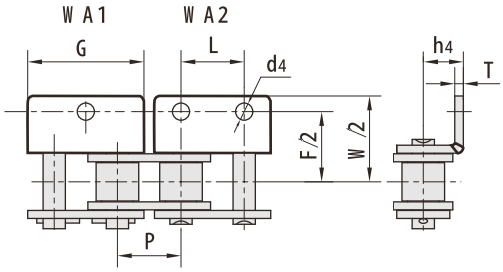

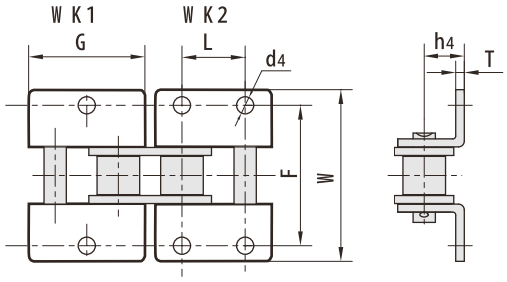

RBL chain number	P mm	G mm	L mm	F mm	W mm	T mm	h4 mm	d4 mm
08BWK2F27	12.700	24.00	12.000	30.43	43.43	2.00	10.00	4.30
08BWK2F28	12.700	24.40	12.700	42.00	56.30	1.60	8.50	6.00
08BWK2F29	12.700	25.45	12.700	34.03	45.93	1.50	13.00	6.00
08BWK2F3	12.700	23.20	12.700	32.00	43.60	1.60	10.00	4.50
08BWK2F32	12.700	23.30	12.700	25.40	40.00	1.60	8.90	M5
08BWK2F39	12.700	24.50	12.700	27.60	41.80	1.60	8.50	4.80
08BWK2F4	12.700	24.00	12.700	25.40	36.40	1.60	8.90	4.30
08BWK2F40	12.700	23.10	12.700	26.00	36.40	1.60	8.90	6.50X4.50
08BWK2F5	12.700	24.20	12.700	23.95	34.95	1.55	8.75	4.30
40WK2F2	12.700	24.00	12.700	25.40	34.70	1.50	8.30	3.18
41WA1F4	12.700	22.30	-	30.00	41.00	1.30	7.20	5.00
428HWK1	12.700	23.30	-	38.00	56.40	2.42	11.00	5.50
10A(W)A2F1	15.875	24.10	15.875	33.60	43.20	2.03	8.20	3.50
10AWA1F2	15.875	28.80	-	32.40	42.20	2.03	10.30	5.20
10AWA1F6	15.875	28.80	-	31.80	46.60	2.03	10.30	6.50
10AWA2F1	15.875	24.10	15.880	30.70	43.89	2.03	10.10	3.90
10AWK1F1	15.875	28.80	-	31.75	46.00	2.03	10.30	8.20
10AWK1F2	15.875	30.00	-	31.75	46.00	2.03	10.30	5.20
10BWA1F1	15.875	28.50	-	52.00	73.00	1.70	10.50	10.00X8.00
10BWA2F2	15.875	28.36	15.760	30.40	39.80	1.60	10.50	5.20
10BWK1F4	15.875	29.58	-	31.80	44.60	1.70	10.31	7.30X5.50
10BWK2F10	15.875	28.60	15.900	31.80	47.60	1.70	10.30	5.20
10BWK2F2	15.875	28.36	15.760	30.40	39.80	1.60	10.50	5.20
10BWK2F3	15.875	29.90	15.880	31.59	45.59	1.60	10.50	5.30
10BWK2F4	15.875	29.58	15.880	31.71	48.41	1.70	10.31	5.30
10BWK2F8	15.875	29.58	15.875	31.80	44.60	1.70	10.31	7.30X5.50
10BWK2F9	15.875	29.90	15.880	48.20	62.20	1.60	10.50	5.30
*C12BWK2F12	19.050	35.00	19.050	37.20	58.00	1.85	11.00	6.60
12AF99	19.050	34.65	19.050	38.10	56.40	2.42	11.90	5.00

* Straight side plates

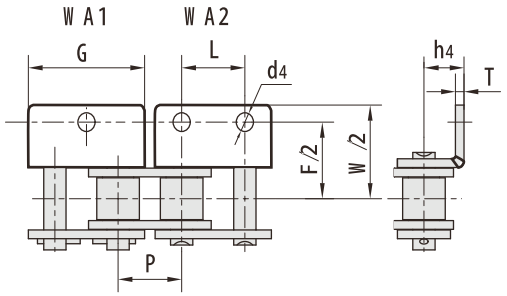

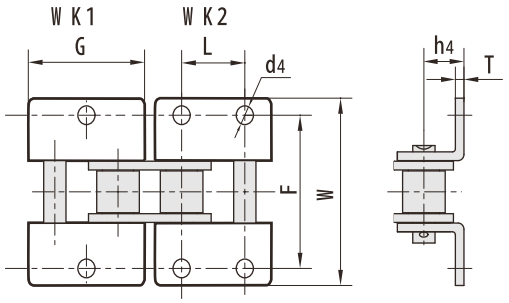

RBL chain number	P mm	G mm	L mm	F mm	W mm	T mm	h4 mm	d4 mm
12AHWA2F3	19.050	34.60	19.050	38.10	56.40	3.25	13.90	6.50
12AHWK2F1	19.050	34.65	19.050	40.60	59.00	3.25	11.90	5.50
12AWA1F5	19.050	34.65	-	38.10	54.40	2.42	11.90	7.00
12AWA1F6	19.050	34.65	-	44.00	62.00	2.42	11.90	10.50
12AWA1F8	19.050	36.00	-	38.10	58.20	2.42	11.90	5.00
12AWA1F9	19.050	34.65	-	38.10	54.40	2.42	11.90	6.50
12AWA2F1	19.050	34.65	19.050	38.20	56.60	2.42	11.90	6.35
12AWA2F10	19.050	34.65	19.050	47.00	62.00	2.42	11.90	8.50
12AWA2F13	19.050	34.65	19.050	38.10	56.40	2.42	11.90	M6
12AWK1F32	19.050	34.65	-	38.10	54.40	2.42	11.90	6.00
12AWK2F5	19.050	34.65	14.300	38.10	54.40	2.42	11.90	6.00
12BF42WK2	19.050	34.90	19.000	35.20	54.60	1.85	12.20	6.40
12BWA1F13	19.050	34.65	-	35.00	51.60	1.85	13.46	7.00
12BWA1F2	19.050	34.05	-	38.10	26.20	1.85	13.46	-
12BWA2F1	19.050	34.80	19.050	35.20	61.40	1.85	12.00	5.50
12BWA2F10	19.050	34.05	19.050	38.90	56.90	1.85	13.46	7.00
12BWA2F11	19.050	32.00	19.050	38.10	56.40	1.85	11.90	5.50
12BWA2F17	19.050	37.00	19.050	38.08	52.38	1.85	13.46	6.40
12BWA2F18	19.050	34.05	19.050	38.10	52.40	1.85	18.50	6.40
12BWA2F19	19.050	37.20	19.050	35.50	56.90	1.85	12.00	6.20
12BWA2F2	19.050	34.90	19.000	35.00	50.60	1.85	12.00	6.20
12BWA2F20	19.050	35.05	19.000	35.20	50.40	1.85	12.20	6.40
12BWA2F21	19.050	34.90	19.000	35.20	54.60	1.85	12.20	6.40
12BWA2F22	19.050	34.05	19.050	37.30	56.00	1.85	11.90	6.50
12BWA2F3	19.050	30.00	20.000	37.40	53.00	1.85	12.00	6.10
12BWA2F5	19.050	30.00	20.000	39.60	55.30	1.85	14.00	M6
12BWA2F6	19.050	30.00	20.000	38.60	57.00	1.85	13.46	6.20
12BWK0F1	19.050	30.00	-	-	55.30	3.00	14.00	5.50
12BWK1F1	19.050	34.05	-	38.10	52.40	1.85	13.46	8.50

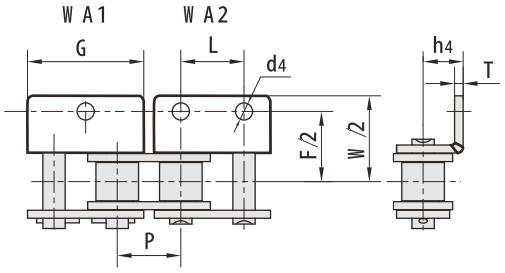

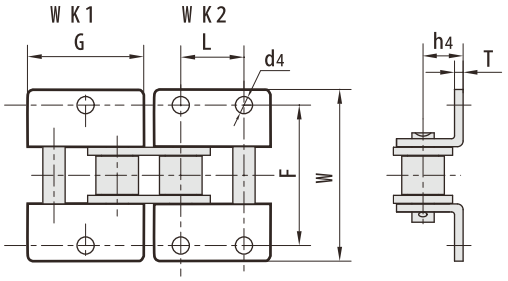

RBL chain number	P mm	G mm	L mm	F mm	W mm	T mm	h4 mm	d4 mm
12BWK1F11	19.050	34.65	-	35.00	56.40	1.85	11.90	6.20
12BWK1F12	19.050	34.05	-	35.00	52.40	1.85	13.46	M6
12BWK1F14	19.050	34.05	-	36.50	52.40	1.85	11.90	10.9X6.4
12BWK1F15	19.050	34.85	-	34.84	51.24	1.85	11.40	6.20
12BWK2F23	19.050	34.05	19.050	36.50	52.40	1.85	11.90	10.9X6.4
12BWK2F25	19.050	34.05	19.050	35.10	54.60	1.85	12.00	6.60
12BWK2F27	19.050	35.25	19.050	35.40	54.90	1.80	11.60	6.40
12BWK2F28	19.050	35.00	19.000	35.00	62.80	1.85	12.00	5.60
12BWK2F7	19.050	34.90	19.000	35.00	55.40	1.85	12.20	6.40
12BWK2F8	19.050	35.60	19.050	38.10	52.40	1.85	13.50	6.60
12BWK2F9	19.050	34.90	19.000	35.00	62.40	1.85	12.20	6.20
*C16BWK2F24	25.400	46.40	25.400	50.80	72.60	3.10	15.88	8.00
16AA2F14	25.400	45.90	25.400	50.80	73.20	3.25	15.90	6.80
16AA2F18	25.400	45.90	19.050	50.80	77.50	3.25	14.125	6.70
16AA2F19	25.400	45.90	25.400	50.80	73.20	3.25	15.90	M6
16AK2F13	25.400	45.90	25.400	50.81	73.21	3.25	15.90	11.00
16AWA2F16	25.400	45.90	25.400	50.80	73.20	3.25	15.90	8.00
16AWA2F9	25.400	45.90	19.100	50.80	73.20	3.25	15.90	9.00
16AWK0F1	25.400	45.90	-	-	82.80	3.25	15.90	-
16AWK1F1	25.400	45.90	-	50.80	73.20	3.25	15.90	8.00
16AWK1F2	25.400	45.90	-	50.80	73.20	3.25	15.90	12.00
16AWK1F7	25.400	45.90	-	50.80	73.20	3.25	15.90	9.00
16AWK2F10	25.400	45.90	25.400	50.80	73.20	3.25	15.90	8.20
16AWK2F17	25.400	45.90	25.400	50.80	73.20	3.25	15.90	6.60
16AWK2F8	25.400	45.90	25.400	50.80	73.20	3.25	15.90	8.50
16BWA1F28	25.400	36.00	-	57.58	77.58	3.10	16.00	M8
16BWA2F12	25.400	46.40	25.400	50.80	77.80	3.10	15.90	8.20
16BWA2F21	25.400	45.50	25.000	54.80	83.80	3.10	16.00	M6
16BWA2F22	25.400	46.40	25.400	50.80	72.60	3.10	15.88	9.00
16BWA2F30	25.400	45.40	25.000	53.00	92.00	3.10	15.88	7.00

* Straight side plates

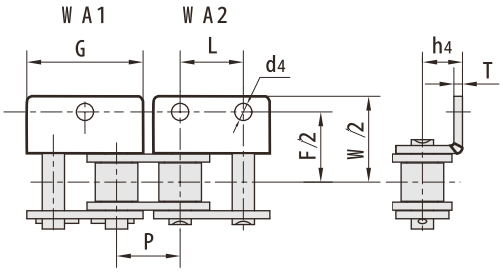

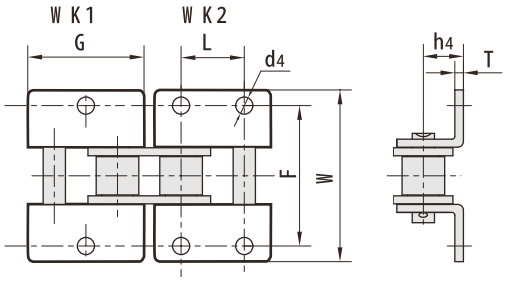

RBL chain number	P mm	G mm	L mm	F mm	W mm	T mm	h4 mm	d4 mm
16BWA2F34	25.400	46.40	25.400	58.08	72.60	3.10	15.88	8.20
16BWA2F36	25.400	46.40	25.400	58.00	84.00	3.10	18.00	9.00
16BWA2F37	25.400	46.00	25.400	50.80	72.60	3.00	16.30	M 8
16BWA2F7	25.400	46.40	25.400	50.80	72.00	4.15	16.00	8.00
16BWK1F	25.400	46.00	-	57.20	78.50	3.10	15.90	8.10
16BWK1F21	25.400	45.50	-	70.00	90.00	3.10	15.00	11.00
16BWK1F25	25.400	46.40	-	58.62	83.12	3.10	17.50	M 6
16BWK1F26	25.400	45.50	-	70.00	90.00	3.10	15.00	11.40
16BWK1F27	25.400	46.00	-	57.20	78.50	3.10	15.90	6.50
16BWK1F3	25.400	46.40	-	50.80	72.60	3.10	15.88	M 6
16BWK1F31	25.400	46.40	25.400	54.40	72.80	3.10	16.00	12.6X9
16BWK1F35	25.400	46.40	-	50.80	72.60	3.10	15.88	8.80
16BWK1F36	25.400	46.40	-	54.40	72.80	3.10	16.00	12.6X9
16BWK1F4	25.400	46.40	-	50.74	72.50	3.10	15.88	8.30
16BWK1F5	25.400	45.00	-	70.00	91.00	4.50	15.00	10.50
16BWK2F1	25.400	48.00	25.400	58.00	75.90	3.10	18.00	9.00
16BWK2F10	25.400	46.40	25.400	52.00	72.60	3.10	15.88	6.40
16BWK2F13	25.400	47.00	25.400	58.00	75.60	4.15	18.00	9.00
16BWK2F23	25.400	46.40	25.400	58.00	84.00	3.10	19.00	8.50
16BWK2F28	25.400	46.40	25.400	50.88	75.12	3.10	15.50	7.00
16BWK2F3	25.400	46.40	25.400	58.08	72.60	3.10	15.88	8.20
16BWK2F31	25.400	46.40	25.400	54.40	72.80	3.10	16.11	12.6X9
16BWK2F32	25.400	46.40	25.400	58.00	76.00	3.10	18.00	9.30
16BWK2F33	25.400	46.40	25.400	50.80	72.60	3.10	15.88	8.20
16BWK2F38	25.400	46.40	25.400	58.12	78.12	3.10	15.90	8.40
16BWK2F39	25.400	46.00	25.400	50.80	79.40	3.10	15.90	6.80
16BWK2F5	25.400	46.00	25.400	53.58	77.58	3.00	16.30	8.20
16BWK2F6	25.400	49.00	25.400	50.20	72.60	4.00	19.00	8.20
16BWK2F8	25.400	46.40	25.400	50.80	79.40	4.15	15.88	6.60
*C20BWK0F1	31.750	57.45	-	-	85.40	3.50	22.80	-

* Straight side plates

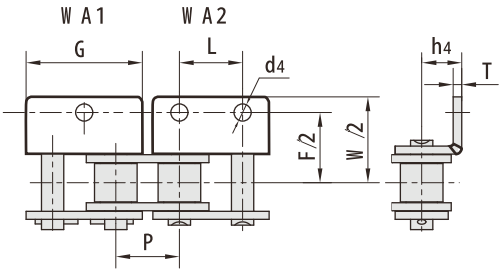

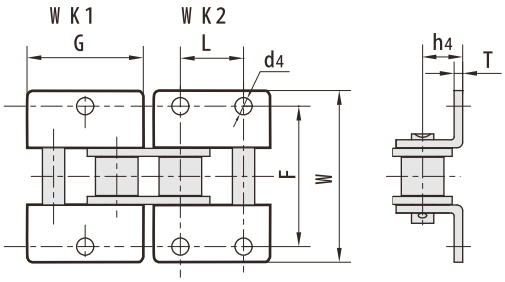

RBL chain number	P mm	G mm	L mm	F mm	W mm	T mm	h4 mm	d4 mm
20AHA2F2	31.750	57.65	31.750	65.60	91.70	4.80	19.80	9.20
20AWA2F4	31.750	57.65	31.750	63.60	89.70	4.00	19.80	6.40
20BWKIFl	31.750	58.15	-	69.00	98.80	3.50	21.00	10.50
20BWK2F1	31.750	58.10	31.750	67.94	100.54	3.50	19.80	9.00
20BWK2F2	31.750	60.00	31.750	68.00	88.00	3.50	23.50	9.60
20BWK2F3	31.750	60.00	31.750	68.00	88.00	3.50	23.60	9.60
24AK2F1	38.100	69.30	38.100	76.20	109.00	4.80	23.00	10.20
24AK2F2	38.100	69.30	38.100	76.20	108.80	4.80	23.00	10.80
24AK2F4	38.100	69.30	38.100	76.20	95.00	4.80	23.00	9.80
24AK2F6	38.100	69.30	38.100	76.20	108.80	4.80	23.00	11.11
24BWK2F2	38.100	71.30	38.100	80.00	118.10	4.80	26.70	10.50
28AF16WK2	44.450	82.00	44.450	70.00	98.00	5.60	24.80	11.40
28AK2F6	44.450	80.45	42.000	69.50	107.20	5.60	28.00	10.50
28AWA2F5	44.450	80.45	44.450	88.90	123.00	5.60	28.60	20X12
28AWK2F1	44.450	82.00	42.000	69.50	99.00	5.60	25.10	10.50
28AWK2F4	44.450	82.00	42.000	69.50	99.00	6.00	25.10	11.20
*C32AF41K2	50.800	88.80	50.800	90.00	118.00	6.40	31.80	11.00
32AWK2F3	50.800	100.00	70.000	100.00	140.00	6.40	31.75	18.00
32AWK2F46	50.800	92.80	42.000	95.00	149.00	6.40	25.00	13.10
32AWK2F50	50.800	92.00	42.000	91.00	126.00	6.40	31.75	16.50
32BF38	50.800	60.00	-	126.00	156.00	11.00	35.00	16.00
32BK2F3	50.800	60.00	30.000	90.00	115.70	6.00	56.00	M 10
32BWA2F3	50.800	92.40	50.800	105.00	147.00	6.00	31.80	12.50
32BWK2F2	50.800	92.80	40.000	76.39	111.99	6.00	31.00	12.50
32BWK2F4	50.800	92.80	42.000	94.50	150.50	6.00	25.00	13.00
32BWK2F5	50.800	92.80	50.800	101.60	142.80	6.00	31.75	13.10
40AWK2F1	63.500	115.50	63.500	127.00	179.00	8.00	42.88	16.00
40BF7	63.500	110.00	66.000	126.20	176.00	8.00	35.00	16.00
40BF8WK2	63.500	116.50	63.500	124.71	177.71	8.00	42.90	17.00

* Straight side plates

W SA1 W SA2

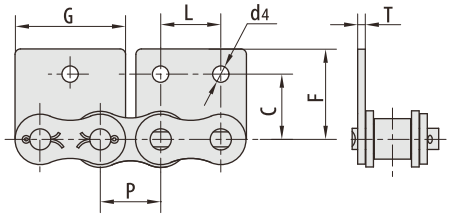

W SK1 W SK2

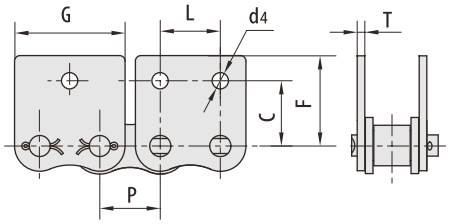

RBL chain number	P mm	G mm	L mm	C mm	F mm	T mm	d4 mm
04BW SK2F1	6.000	10.50	6.000	7.00	11.00	0.60	2.20
05BW SA2F1	8.000	14.00	6.000	7.00	13.00	0.80	3.00
*06B IB SA2F1	9.525	17.60	9.500	10.10	14.50	1.30	3.30
*06BW SK0F1	9.525	17.72	-	-	13.50	1.30	-
*06BW SK2F2	9.525	17.25	9.520	9.50	13.50	1.15	3.50
06CW SA2F1	9.525	17.53	9.530	8.50	14.70	1.30	4.20
06CW SA2F2	9.525	18.50	9.525	9.60	14.70	1.30	3.30
08AW SA2F1	12.700	23.00	12.700	17.47	20.65	1.50	3.60
08BW SA0F2	12.700	23.30	-	-	18.90	1.60	-
08BW SA0F4	12.700	23.20	-	-	16.00	1.60	-
08BW SA1F2	12.700	24.45	-	13.40	18.90	1.60	4.30
08BW SA2F11	12.700	23.30	12.700	13.35	18.90	1.60	4.00
08BW SA2F9	12.700	23.30	12.700	19.50	25.00	1.60	4.30
08BW SK2F1	12.700	23.30	12.700	13.35	18.90	1.60	6.10
08BW SK2F13	12.700	23.05	12.700	14.10	19.20	1.60	4.30
08BW SK2F2	12.700	24.45	12.700	13.40	18.90	1.60	4.30
08BW SK2F3	12.700	24.20	12.700	14.10	19.50	1.55	4.30
08BW SK2F4	12.700	23.30	12.700	14.10	18.50	1.60	4.30
08BW SK2F8	12.700	23.30	12.700	13.35	18.90	1.60	5.00
*C10BW SK0F1	15.875	29.58	-	-	22.95	1.70	-
10AW SA0F5	15.875	30.30	-	-	24.10	2.03	-
10AW SA0F6	15.875	28.90	-	-	19.70	2.03	-
10AW SA1F1	15.875	30.88	-	17.50	33.50	2.03	6.00
10AW SK2F1	15.875	28.45	15.900	17.30	26.90	2.03	5.00
10BSK2F5	15.875	29.90	15.880	16.32	23.32	1.60	5.30
10BW SK2F6	15.875	28.60	15.900	15.90	23.70	1.70	5.20
*C12AW SA1F1	19.050	34.05	-	17.60	25.80	2.42	9.00
*C12BW SK0F7	19.050	34.05	-	-	22.00	1.85	-
12AW SA0F1	19.050	37.05	-	-	24.00	2.42	-
12AW SA0F2	19.050	34.65	-	-	26.86	2.42	-
12AW SA2F2	19.050	34.65	19.050	17.57	26.80	2.42	5.50
12AW SK1F2	19.050	34.65	-	15.75	33.53	2.42	16.13
12AW SK2F1	19.050	34.65	19.050	18.30	26.86	2.42	9.00
12BSK1F6	19.050	18.00	-	18.20	28.10	1.80	6.40
12BSK2F1	19.050	34.05	19.050	18.20	28.60	1.85	6.40
12BW SK0F10	19.050	34.05	-	-	15.00	1.85	-
12BW SK0F8	19.050	34.05	-	-	12.00	1.85	-

* Straight side plates

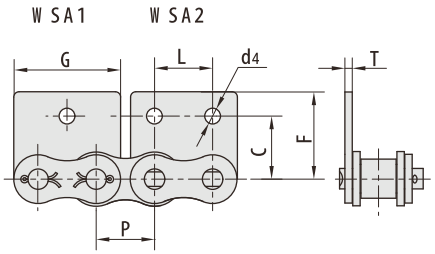

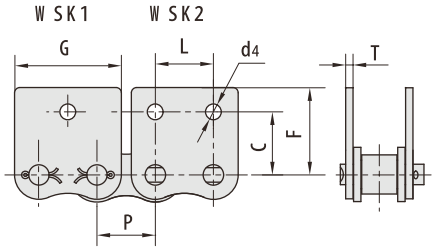

RBL chain number	P mm	G mm	L mm	C mm	F mm	T mm	d4 mm
12BW SKIFI	19.050	35.20	-	20.58	30.30	1.85	6.35
12BW SK2F2	19.050	34.90	19.000	17.80	25.90	1.85	6.20
12BW SK2F3	19.050	34.90	19.000	17.80	25.90	1.85	5.50
12BW SK2F4	19.050	37.20	19.000	18.30	29.00	1.85	6.20
12BW SK2F5	19.050	34.05	19.050	19.00	30.50	1.85	5.72
12BW SK2F6	19.050	34.90	19.000	17.90	32.00	1.85	5.60
*C16BSK0F4	25.400	35.00	-	-	25.00	3.00	-
*C16BW SK0F1	25.400	46.40	-	-	24.00	3.10	-
*C16BW SK0F6	25.400	25.00	-	-	25.00	3.10	-
16AW SK1F3	25.400	45.90	-	16.00	34.40	3.25	14.52
16AW SK1F4	25.400	45.90	-	16.00	34.40	3.25	15.56
16AW SK1F5	25.400	45.90	-	16.00	34.40	3.25	17.15
16AW SK1F6	25.400	45.90	-	16.00	34.40	3.25	16.00
16AW SK2F1	25.400	45.90	19.100	24.60	35.45	3.25	9.00
16BF95	25.400	46.40	25.400	27.50	40.00	3.10	8.28
16BW SA2F6	25.400	49.00	25.400	25.50	37.60	4.00	8.20
16BW SK0F9	25.400	46.40	-	-	24.00	4.15	-
16BW SKIF8	25.400	47.00	25.400	31.10	39.70	4.15	9.00
16BW SK2F10	25.400	46.50	25.400	28.60	41.50	3.10	9.00
16BW SK2F15	25.400	46.40	25.400	23.15	34.00	3.10	6.40
16BW SK2F16	25.400	45.85	25.400	26.00	36.75	3.10	6.80
16BW SK2F5	25.400	46.00	25.400	25.40	37.50	3.00	8.20
16BW SK2F7	25.400	47.00	25.400	31.10	39.70	3.10	6.60
16BW SK2F8	25.400	46.40	-	25.00	37.00	3.10	8.20
16BW SK2F9	25.400	47.00	25.400	31.10	39.70	4.15	9.00
20AW SK1F2	31.750	57.65	-	31.80	44.00	4.00	16.00
20AW SK1F3	31.750	57.65	-	31.80	34.98	4.00	16.00
20BW SK2F2	31.750	58.10	31.750	35.00	50.00	3.50	9.00
20BW SK2F3	31.750	52.00	32.000	26.00	36.00	4.50	9.00
24AW SK2F1	38.100	69.30	38.100	34.40	50.70	4.80	9.80
24BW SK2F1	38.100	71.30	38.100	45.00	55.60	4.80	10.50
24BW SK2F3	38.100	71.30	38.100	41.00	60.00	4.80	11.00
140HW SK0F1	44.450	80.48	-	-	43.00	5.00	-
28AW SK2F2	44.450	80.45	44.450	44.20	61.25	5.60	11.40
32AF5	50.800	93.00	50.800	38.10	56.65	6.40	13.50
32AW SK2F1	50.800	92.00	50.800	100.00	150.00	6.40	13.10
40AW SK2F1	63.500	115.60	63.500	63.50	89.00	8.00	17.00

* Straight side plates

AA1

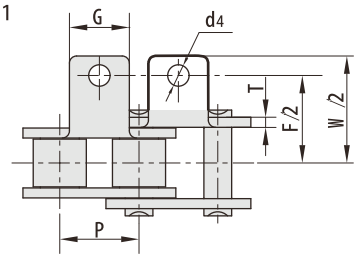

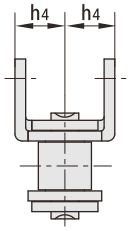

KK1

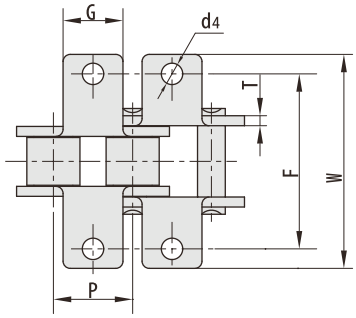

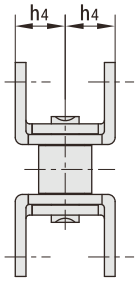

RBL chain number	P mm	G mm	F mm	W mm	T mm	h4 mm	d4 mm
40	12.700	9.5	25.40	35.2	1.50	7.90	3.4
50	15.875	12.7	31.75	46.2	2.03	10.30	5.5
60	19.050	15.9	38.10	55.6	2.42	11.90	5.5
80	25.400	19.1	50.80	64.8	3.25	15.90	6.8
100	31.750	25.4	63.50	87.3	4.00	19.80	9.2
120	38.100	28.6	76.20	108.5	4.80	23.00	9.8
*06B	9.525	8.0	19.04	27.0	1.30	6.50	3.5
08B	12.700	9.5	25.40	36.4	1.60	8.90	4.5
10B	15.875	14.3	31.75	44.6	1.70	10.31	5.3
12B	19.050	16.0	38.10	52.4	1.85	13.46	6.4
16B	25.400	19.1	50.80	72.6	3.10	15.88	6.4
20B	31.750	35.0	63.50	100.5	3.50	19.80	9.0
24B	38.100	30.0	76.20	108.4	4.80	26.67	10.5
08AA1F9	12.700	9.6	55.40	62.5	2.03	7.50	4.2
08AA1F10	12.700	9.6	28.00	36.4	1.50	8.50	3.2
08AA1F11	12.700	9.5	25.40	35.2	1.50	7.90	5.5
08AA1F12	12.700	9.5	25.40	35.2	1.50	7.90	3.2
08AKK1F1	12.700	9.5	25.40	36.4	1.50	8.90	4.5
80HAA1F1	25.400	20.0	62.00	79.6	3.24	35.60	8.1
24BAA1F2	38.100	35.0	83.80	103.8	6.00	36.15	10.0
28BKK1F2	44.450	35.0	117.00	147.0	6.00	22.50	12.0

* Straight side plates

SAA1

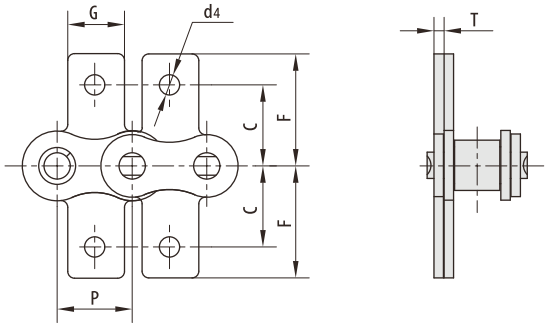

SKK1

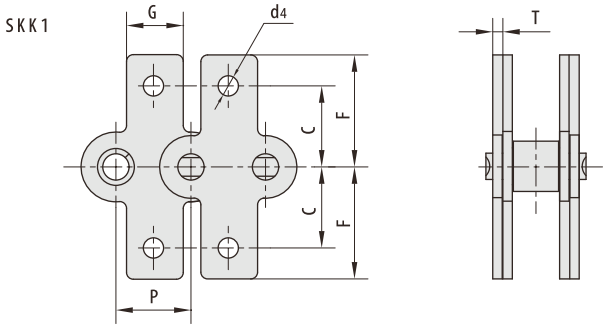

RBL chain number	P mm	G mm	C mm	F mm	T mm	d4 mm
40	12.700	9.5	12.70	19.05	1.50	3.4
50	15.875	12.7	15.90	25.25	2.03	5.5
60	19.050	15.9	18.30	29.33	2.42	5.5
80	19.050	19.1	24.60	34.70	3.25	6.8
100	31.750	25.4	31.80	43.30	4.00	9.2
120	38.100	28.6	73.00	103.20	4.80	9.8
*06B	9.525	8.0	9.52	13.50	1.30	3.5
08B	12.700	9.5	13.35	18.90	1.60	4.3
10B	15.875	14.3	16.50	22.95	1.70	5.3
12B	19.050	16.0	21.45	28.60	1.85	6.4
16B	25.400	19.1	23.15	34.00	3.10	6.4
20B	31.750	35.0	30.50	45.70	3.50	9.0
24B	38.100	36.0	85.40	123.0	4.80	10.5
41F12	12.700	9.5	-	17.35	1.30	-
12ASAA1F1	19.050	15.9	19.90	26.00	2.42	5.5

* Straight side plates

RBL chain number	P mm	A mm	B mm	h1 mm	h mm	H mm
06CF2	9.525	6.50	8.00	5.20	20.50	24.15
06CF7	9.525	6.50	8.00	4.10	20.00	24.45
06CF9	9.525	6.50	8.00	4.10	20.00	24.45
06CF20	9.525	6.50	8.00	5.20	20.50	24.15
06CF23	9.525	6.50	8.00	5.20	20.50	24.15
06CF25	9.525	6.50	8.00	5.20	20.50	24.15
06CF34-2STC	9.525	7.00	8.20	3.60	16.40	23.80
06CF50	9.525	6.50	8.00	5.50	20.00	24.10

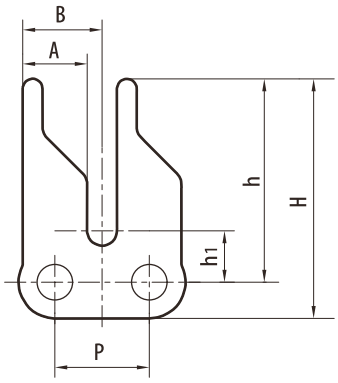

RBL chain number	P mm	A mm	B mm	C mm	h1 mm	h mm	H mm
06CF5	9.525	4.3	2.0	16.9	5.3	16.0	20.0
06CF8	9.525	4.3	2.0	16.9	5.3	20.0	24.0
06CF46	9.525	4.8	1.6	17.6	4.8	16.0	20.0

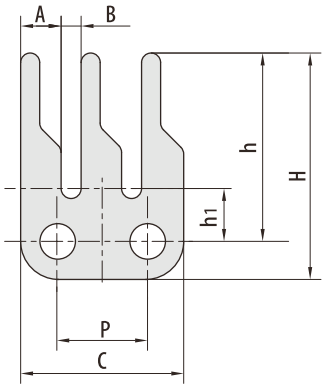

RBL chain number	P mm	A mm	C mm	h1 mm	h mm	H mm
06CF6	9.525	3.25	17.5	5.25	16.00	20.00

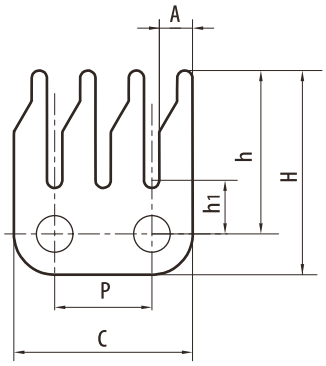

RBL chain number	P mm	L mm	A mm	B mm	H mm
RS40F1	12.7	23.6	7.32	16.1	13.3

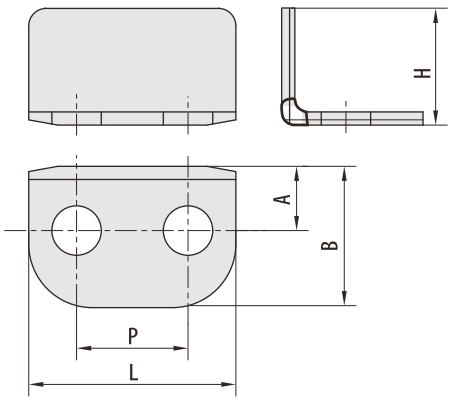

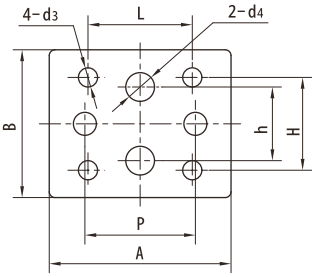

RBL chain number	P mm	A mm	B mm	L mm	h mm	H mm	d3 mm	d4 mm
08AF7	12.7	31.34	25.48	17.45	12.7	15.88	3.30	4.95

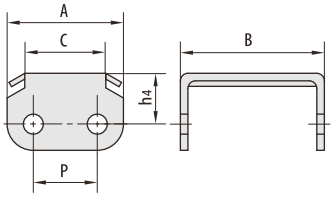

RBL chain number	P mm	A mm	B mm	C mm	h4 mm
08AF9-2	12.7	23.00	28.80	16.00	10.00

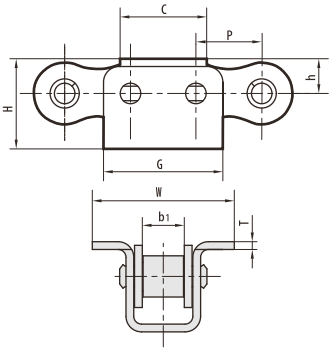

RBL chain number	P mm	b1 mm	C mm	G mm	H mm	h mm	W mm	T mm
08A-U1F1	12.7	7.85	16.50	24.50	17.4	7.0	27.4	1.60

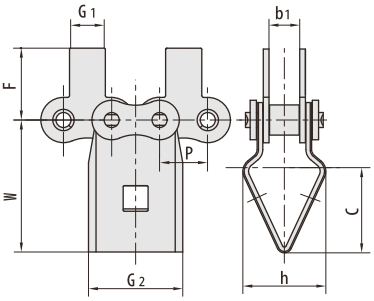

RBL chain number	P mm	b1 mm	G1 mm	G2 mm	F mm	W mm	C mm	h mm
08ASAF1	12.7	7.85	9.50	25.0	19.05	35.0	21.5	22.0
08ASAF3	12.7	7.85	9.53	25.0	17.45	35.0	21.5	22.0

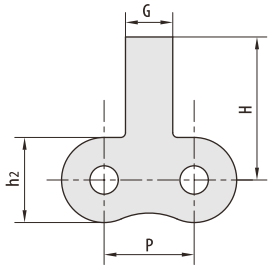

RBL chain number	P mm	G mm	H mm	h2 mm
12ASA	19.05	10.00	204.00	18.00

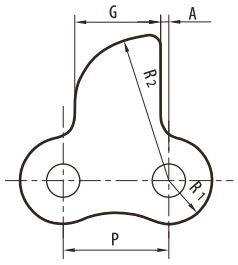

RBL chain number	P mm	G mm	A mm	R1 mm	R2 mm
12AF7	19.05	15.50	1.47	7.80	26.50

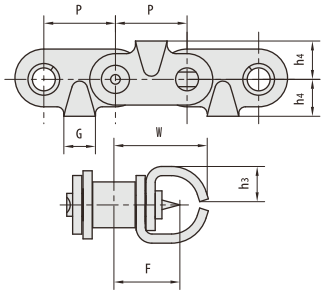

RBL chain number	P mm	G mm	F mm	W mm	h3 mm	h4 mm
10AF12	15.875	7.00	14.55	21.20	7.80	8.50

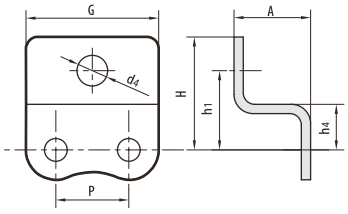

RBL chain number	P mm	A in in	G mm	hl m m	h4 mm	H mm	d4 mm
12AF8	19.05	12.0	37.05	-	12.0	26.50	-
12AF17	19.05	20.0	34.65	20.69	11.9	29.48	8.0

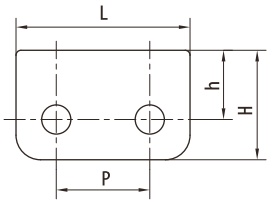

RBL chain number	P mm	h mm	H mm	L mm
C60TS	19.05	14.10	22.30	35.45

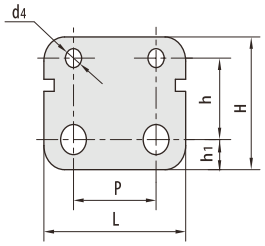

RBL chain number	P mm	G mm	h1 mm	h mm	H mm	d4 mm
16AF6	25.40	47.63	7.92	21.44	34.93	4.98

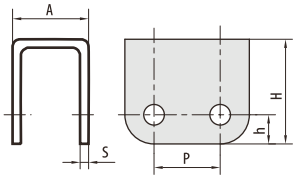

RBL chain number	P mm	h mm	H mm	A mm	S mm
16AF8	25.40	11.20	40.20	29.20	3.10

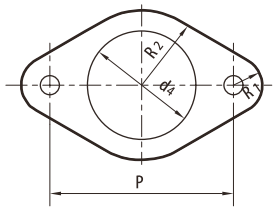

RBL chain number	P mm	d4 mm	R1 mm	R2 mm
16AF13	76.20	45.00	11.90	31.00

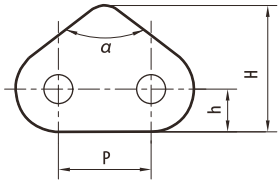

RBL chain number	P mm	h mm	H mm	a
20AF2	31.75	12.50	51.00	74°

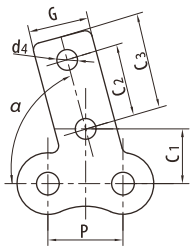

RBL chain number	P mm	G mm	C1 mm	C 2 mm	C3 mm	d4 mm	a
20ASK1F1	31.75	25.4	23.0	30.0	40.0	8.70	75“

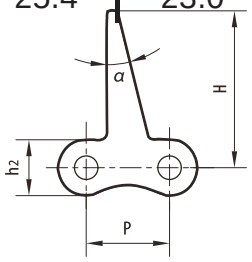

RBL chain number	P mm	H mm	h2 mm	a
41F5	12.70	23.90	8.51	14“

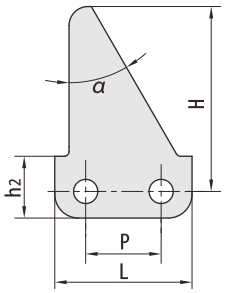

RBL chain number	P mm	H mm	h2 mm	L mm	a
10ASA0F1	15.875	38.50	13.00	29.50	30“

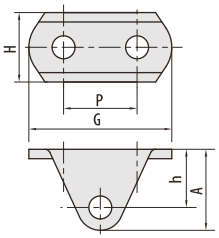

RBL chain number	P mm	H mm	h mm	G mm	A mm
16AF21	25.40	24.00	20.10	49.40	28.10

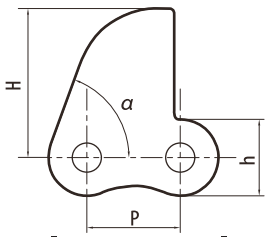

RBL chain number	P mm	H mm	h mm	a
12AHF27	19.05	30.20	15.60	70°

RBL chain number	P mm	H mm	h mm	G mm
12AHF30	19.05	47.20	15.60	10.00

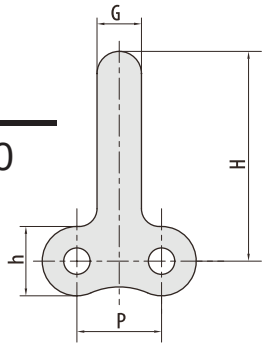

RBL chain number	P mm	H mm	h mm	G mm	A mm
10AF25	15.875	25.40	15.00	6.35	12.70

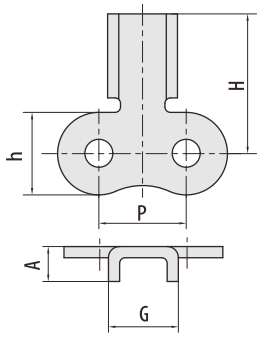

RBL chain number	P mm	H mm	h mm	G mm	A mm
10AF17	15.875	25.00	10.30	27.80	28.88

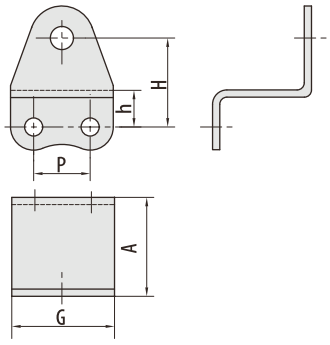

RBL chain number	P mm	H mm	h mm	G mm
12AF44	19.05	55.00	15.60	36.85

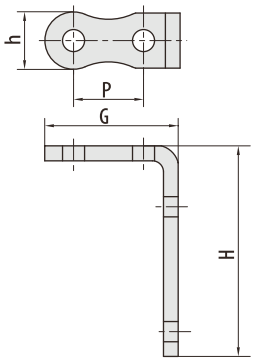

RBL chain number	P mm	H mm	G mm	a mm
20AF21	31.75	49.46	61.50	22°

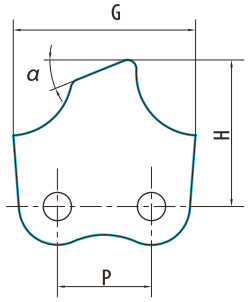

RBL chain number	P mm	H mm	h mm	G mm
20AF18	63.50	40.00	15.00	93.00

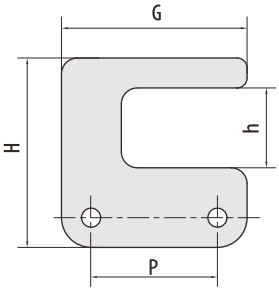

RBL chain number	P mm	h2 mm	H mm	A mm	B mm
05BF1	8.00	7.10	16.00	5.00	12.00

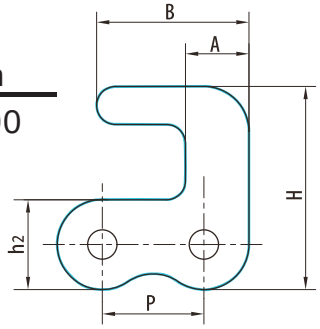

RBL chain number	P mm	H mm	h mm	G mm
05BF3	8.00	17.55	14.00	4.00

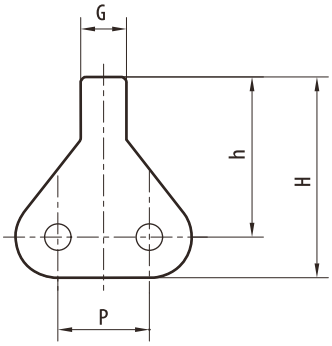

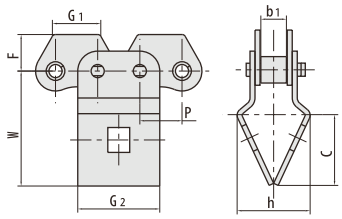

RBL chain number	P mm	b1 mm	G1 mm	G2 mm	F mm	W mm	C mm	h mm
08ASAF2	12.70	7.85	14.00	24.70	11.00	35.00	21.00	21.80

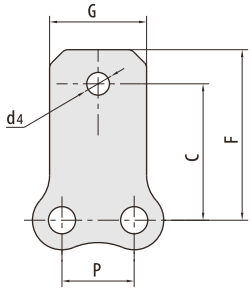

RBL chain number	P mm	G mm	C mm	F mm	d4 mm
06CSA1F2	9.525	12.80	18.00	22.50	M 4

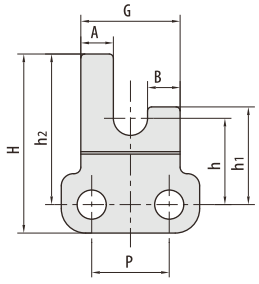

RBL chain number	P mm	G mm	A mm	B mm	h mm	h1 mm	h2 mm	H mm
06CF47	9.525	12.20	4.00	4.00	10.60	12.00	18.50	22.00

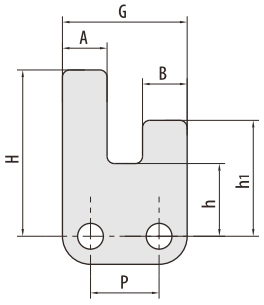

RBL chain number	P mm	G mm	A mm	B mm	h mm	h1 mm	H mm
06CF45	9.525	17.20	6.20	6.20	10.20	16.20	23.20

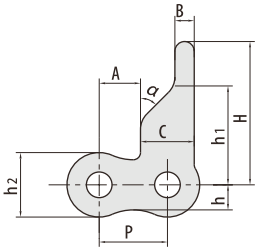

RBL chain number	P mm	h2 mm	A mm	B mm	C mm	h mm	h1 mm	H mm	a
06CF27	9.525	7.80	6.26	2.00	6.50	3.00	14.00	20.00	45°
06CF44	9.525	9.00	5.80	2.70	7.50	3.50	13.80	20.00	45°

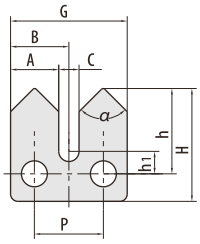

RBL chain number	P mm	G mm	A mm	B mm	C mm	h mm	h1 mm	H mm	a
06CF28	9.525	16.10	6.65	8.05	2.80	11.90	3.10	15.70	90°

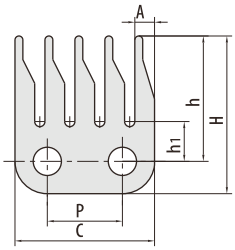

RBL chain number	P mm	A mm	C mm	h1 mm	h mm	H mm
06CF15	9.525	2.50	17.70	5.05	15.90	20.00

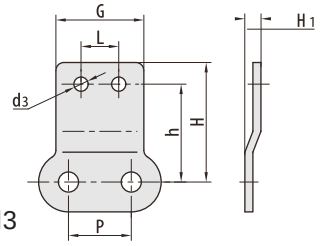

RBL chain number	P mm	G mm	L mm	h mm	H mm	H1 mm	d3 mm
C50SA2F1	15.875	22.23	9.53	24.46	30.81	4.06	3.60
C50SA2F2	15.875	22.20	9.50	24.70	30.20	4.06	3.60

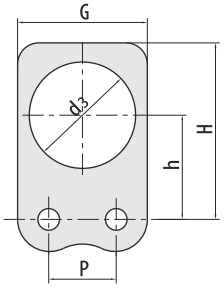

RBL chain number	P mm	G mm	h mm	H mm	d3 mm
10AW A1F4	15.875	30.50	23.50	40.50	25.00

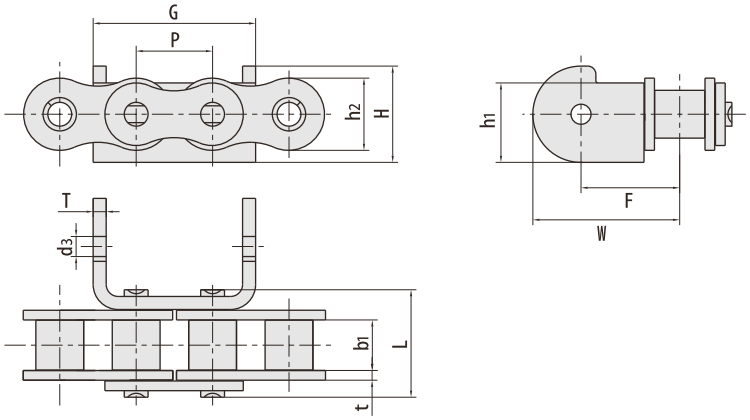

RBL chain number	P mm	b1 mm	L mm	G mm	d3 mm	F mm	W mm	H mm	h1 mm	h2 mm	t mm	T mm
12AAA1F1	19.05	12.57	28.60	40.50	8.00/6.00	24.70	36.70	24.00	-	18.00	2.42	3.25
12AAA1F2	19.05	12.57	28.60	40.50	8.00/6.00	24.70	36.70	24.00	19.80	18.00	2.42	3.25
12AAA1F3	19.05	12.57	28.60	40.50	6.00	24.70	36.70	24.00	19.80	18.00	2.42	3.25

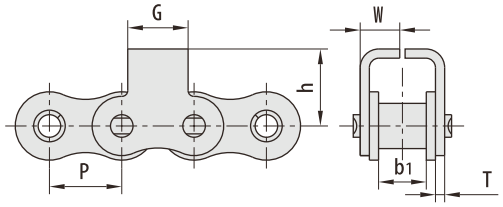

RBL chain number	P mm	b1 mm	G mm	h mm	W mm	T mm
12AK0F1	19.05	12.57	15.90	20.28	10.42	2.42
20BSK0F1	31.75	19.56	35.00	39.32	16.80	3.50

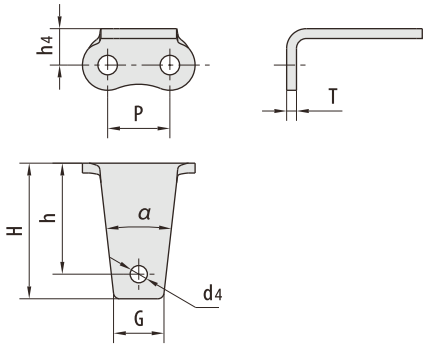

RBL chain number	P mm	h4 mm	G mm	h mm	H mm	T mm	h1 mm	a
16AHA1F2	25.40	14.80	20.00	45.10	55.10	4.00	7.00	13°

RBL chain number	P mm	h4 mm	G mm	A mm	B mm	C mm	d4 mm	T mm
8BA2F41	12.70	8.90	10.00	8.40	10.00	24.00	4.20	1.60
16AA2F1	25.40	15.90	32.00	25.00	20.75	58.25	9.00	3.25

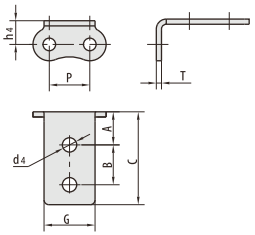

RBL chain number	P mm	A mm	B mm	C mm	L mm	G mm	d4 mm
20ASK4F1	31.75	45.20	90.00	155.20	30.00	57.65	9.00

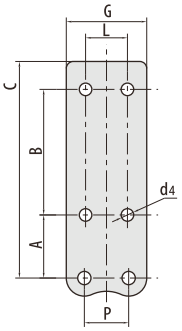

RBL chain number	P mm	L mm	G mm	h mm	h1 mm	H mm	d4 mm	d5 mm
32AF47SA3	50.80	50.80	92.00	56.00	85.00	115.00	18.00	12.50

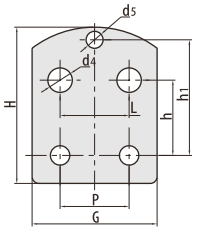

RBL chain number	P mm	G mm	h mm	H mm
10AF72	15.88	56.00	16.10	44.00
10AF73	15.88	43.00	30.30	44.00

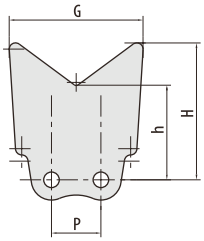

RBL chain number	P mm	G mm	L mm	h4 mm
10AF70	15.875	31.00	18.70	13.20

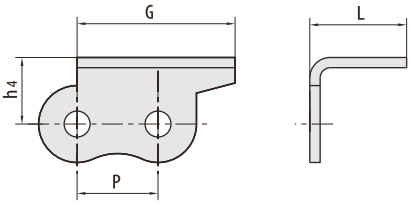

RBL chain number	P mm	H mm	h mm	*a*	B
10AF60	15.875	37.50	31.00	30°	75°

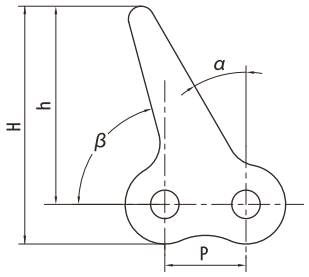

RBL chain number	P mm	G mm	H mm	h mm	h2 mm	H2 mm
10AF67	15.875	27.00	40.30	23.00	33.80	5.03

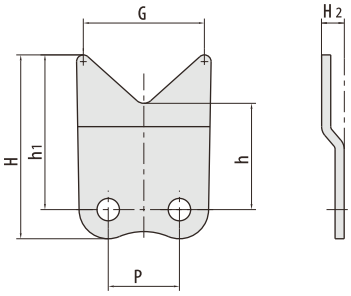

RBL chain number	P mm	G mm	C mm	H mm	h mm	h1 mm
10AF65	15.875	30.00	4.90	41.00	18.00	34.50
10AF66	15.875	30.00	4.90	41.00	23.70	34.50

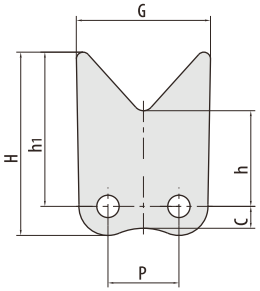

RBL chain number	P mm	C mm	F mm	H mm	H2 mm	d3 mm
12AF117	19.05	40.00	50.00	57.35	12.61	6.30

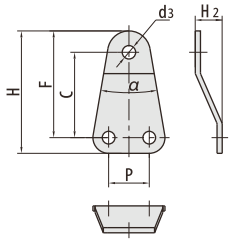

RBL chain number	P mm	B mm	h1 mm	h2 mm	a
20AHF42	31.75	10.00	30.00	30.00	*52°*

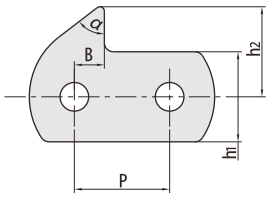

RBL chain number	P mm	C mm	C1 mm	C2 mm	F mm	G mm	d4 mm
20AF39-G1	31.75	45.00	30.00	30.00	125.00	57.65	13.00

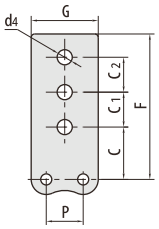

RBL chain number	P mm	G mm	G1 mm	A mm	C mm	C1 mm	H mm	*a*
32AF45	50.80	98.80	12.00	16.00	18.00	60.00	37.00	*30°*

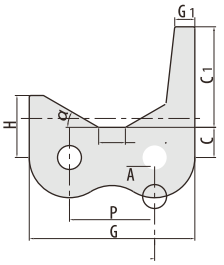

RBL chain number	P mm	h2 mm	C mm	F mm	d4 mm
40ASA1F1	62.50	52.00	30.00	47.80	14.50

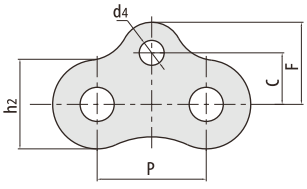

RBL chain number	P mm	H mm	h mm	G mm
05BF4	8.0	12.7	9.7	2.5

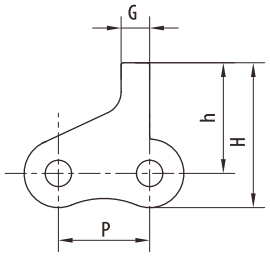

RBL chain number	P mm	H mm	h mm	G mm
05BF6	8.0	17.55	16.95	21.0

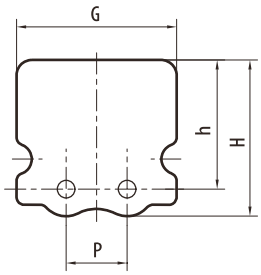

RBL chain number	P mm	H mm	h mm	G mm
08B-d53	12.7	20.0	10.6	11.5

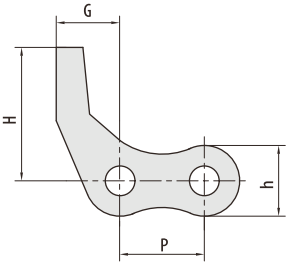

RBL chain number	P mm	H mm	h mm	G mm
08BSK0F2	12.70	17.0	11.1	17.0
C12BF74	19.05	20.0	12.0	23.0

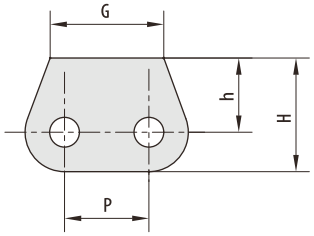

RBL chain number	P mm	H mm	h mm	G mm	L mm
08BF61	12.7	25.4	9.9	14.3	24.3

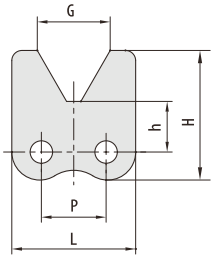

RBL chain number	P mm	R mm	h mm	a mm	B mm
08BF24	12.70	6.20	31.00	30°	75°

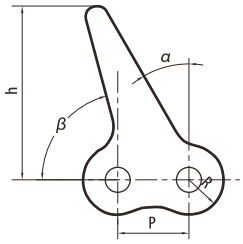

RBL chain number	P mm	G mm	C mm	F mm	h mm	d4 mm
08BSA1F18	12.70	14.00	11.70	11.70	5.30	4.10

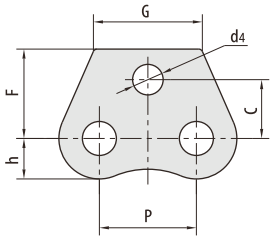

RBL chain number	P mm	h4 mm	L mm	G mm	h mm	H mm	d4 mm	d5 mm	T mm
08BA3F1	12.70	7.80	17.50	22.70	10.90	17.80	2.90	6.70	1.60
08BA3F2	12.70	8.00	17.50	24.60	10.60	17.80	2.50	16.60	1.60
12BW A3F3	19.05	11.50	19.05	34.90	10.00	17.30	2.80	6.70	1.85
12BW A3F4	19.05	12.20	17.40	34.05	11.30	18.00	2.80	6.30	1.85

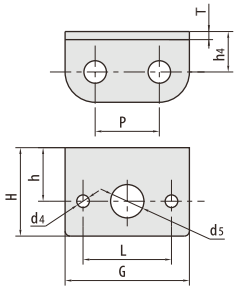

RBL chain number	P mm	H mm	h mm	G mm	L mm	a
08BF169	12.70	22.70	11.70	28.10	35.40	25°
08BF207	12.70	22.70	11.70	28.60	34.70	27°

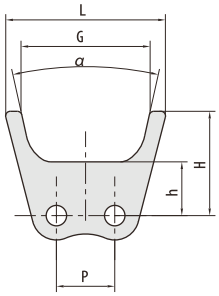

RBL chain number	P mm	H mm	h mm	G mm	L mm	a
08BF169	12.70	22.70	11.70	28.10	35.40	25°
08BF207	12.70	22.70	11.70	28.60	34.70	27°

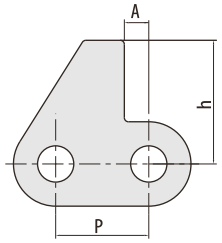

RBL chain number	P mm	h mm	H mm	d4 mm
16BF121NP	25.40	25.50	36.10	8.00

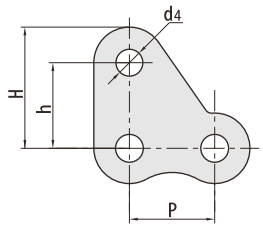

RBL chain number	P mm	L1 mm	G mm	h mm	H mm	d4 mm
16BF120	25.40	16.50	45.70	19.90	26.50	5.05
20BF47	31.75	21.17	61.71	25.00	33.00	10.19

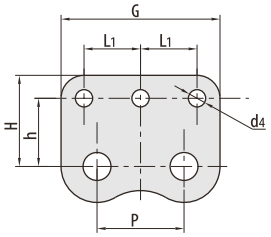

RBL chain number	P mm	h mm	H mm	G mm	A mm	d4 mm
16BF109	49.70	47.50	64.50	32.70	32.50	6.00

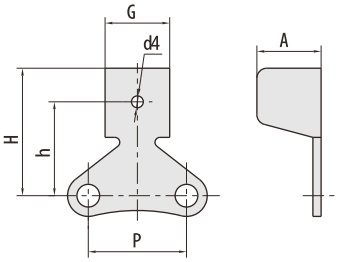

RBL chain number	P mm	G mm	A mm	h mm
C20BF51	31.75	21.75	10.00	40.00

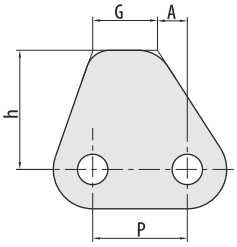

RBL chain number	P mm	G mm	h mm	H mm
20BF46	31.75	78.00	35.00	50.00

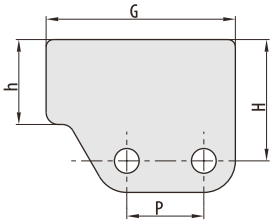

RBL chain number	P mm	G mm	h mm
C20BF41	31.75	20.00	53.20

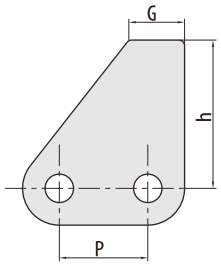

RBL chain number	P mm	h1 mm	h mm	G mm
08BF37	12.70	5.00	11.80	20.00

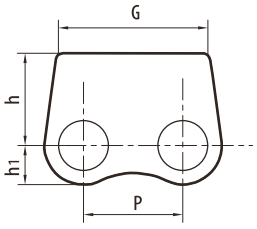

RBL chain number	P mm	h mm	H mm	A mm	B mm	d3 mm	d4 mm
12B-K188	19.05	14.00	26.70	35.00	25.00	18.00	4.30

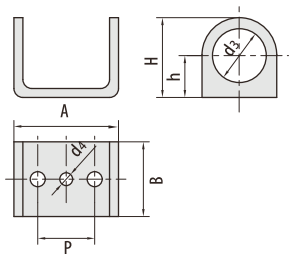

RBL chain number	P mm	h2 mm	H mm	A mm	B mm	d4 mm	L mm
16BF11	25.40	47.50	64.50	36.00	35.00	6.00	52.70
20BF2	31.75	-	70.00	43.00	35.00	-	65.15

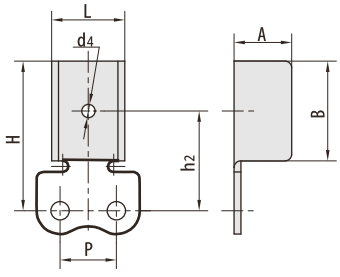

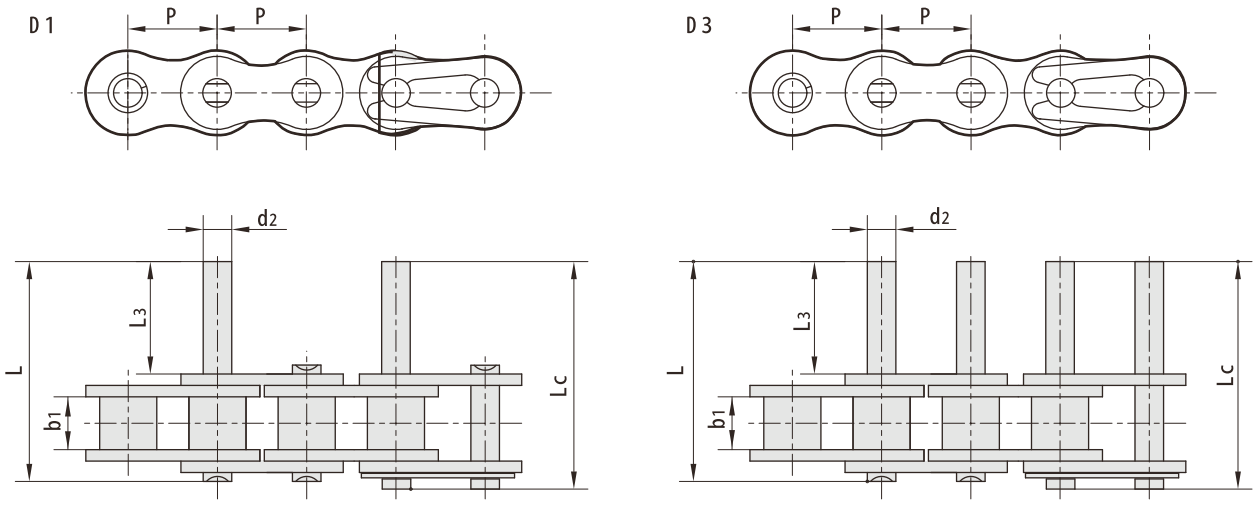

RBL chain number	P mm	b1 mm	d2 mm	L3 mm	L mm	Lc mm
35	9.525	4.77	3.58	9.5	20.8	21.6
40	12.700	7.85	3.96	9.5	25.1	26.2
50	15.875	9.40	5.08	11.9	31.3	33.1
60	19.050	12.57	5.94	14.3	38.6	40.6
80	25.400	15.75	7.92	19.1	50.3	53.3
100	31.750	18.90	9.53	23.8	61.8	66.1
120	38.100	25.22	11.10	28.6	76.4	80.4
140	44.450	25.22	12.70	33.3	84.8	89.4
160	50.800	31.55	14.27	38.1	99.6	104.4
08B	12.700	7.75	4.45	9.5	25.1	26.6
10B	15.875	9.65	5.08	11.9	30.1	31.5
12B	19.050	11.68	5.72	14.3	35.4	37.1
16B	25.400	17.02	8.28	19.1	53.0	54.3
20B	31.750	19.56	10.19	41.0	79.9	83.6
24B	38.100	25.40	14.63	50.7	101.4	105.8
28B	44.450	30.99	15.90	61.9	124.0	128.4
32B	50.800	30.99	17.81	64.8	126.8	131.8

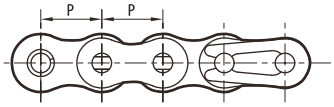

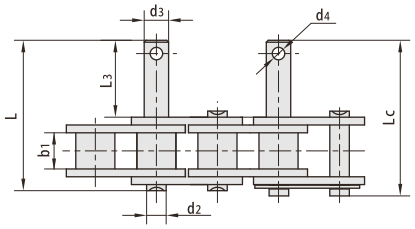

RBL chain number	P mm	b1 mm	d2 mm	d3 mm	L3 mm	L mm	Lc mm	d4 mm
06B-D1F21	9.525	-	3.28	5.00	15.00	-	28.40	-
06C-D1F12	9.525	4.77	3.58	3.55	14.75	26.20	-	-
08A-D1F37	12.700	-	3.96	4.85	35.35	-	52.00	-
08A-D1F48	12.700	7.85	3.96	5.00	45.00	-	61.90	-
08A-D1F49	12.700	-	3.96	5.00	35.00	-	51.65	-
08B-D1F53	12.700	7.75	4.45	6.00	20.00	35.60	-	-
08B-D1F67	12.700	7.75	4.45	6.00	15.50	31.40	-	-
08B-D1F74	12.700	7.75	4.45	4.45	16.00	31.70	-	1.60
08B-D1F79	12.700	7.75	4.45	6.00	15.00	30.90	32.20	-
08B-D1F80	12.700	7.75	4.45	6.00	15.00	30.90	-	2.60
08B-D3F101	12.700	7.75	4.45	6.00	9.00	24.80	-	-
08B-D3F95	12.700	7.75	4.45	7.00	25.00	40.80	-	42.30
08B-D4	12.700	7.75	4.45	6.00	15.00	31.20	32.40	-
08B-D7	12.700	7.75	4.45	6.00	14.00	30.20	31.40	2.60
08BF3	12.700	7.75	4.45	6.00	8.00	24.20	25.40	-
10A-D1F31	15.875	9.40	5.08	8.00	15.00	34.40	-	-
10A-D1F32	15.875	9.40	5.08	7.50	19.00	38.40	-	3.00
10A-D1F36	15.875	9.40	5.08	6.60	20.00	39.40	-	-
10A-D1F40	15.875	9.40	5.08	5.96	25.30	44.70	-	-
10A-D1F43	15.875	-	5.08	8.00	40.00	-	60.90	-
10A-D1F48	15.875	9.40	5.08	6.00	25.00	44.40	-	-
10A-D3F44	15.875	9.40	5.08	6.00	13.60	33.00	-	-
10A-D9	15.875	9.40	5.08	6.35	20.00	39.50	41.10	-
10B-D1F31	15.875	9.65	5.08	6.00	20.00	38.20	-	-
10B-D1F39	15.875	9.65	5.08	5.08	29.90	48.10	-	1.60
10B-D1F42	15.875	9.65	5.08	6.00	51.00	62.90	-	-
10B-D1F45	15.875	9.65	5.08	6.50	18.00	36.30	-	-
10B-D3F50	15.875	9.65	5.08	8.00	9.00	27.20	-	-
10B-D7	15.875	9.65	5.08	6.50	40.00	58.50	60.10	-
10BF2	15.875	9.65	5.08	6.00	25.00	43.40	44.80	-
10BF3	15.875	9.65	5.08	8.00	25.00	43.40	44.80	-
12A-D1F30	19.050	12.57	5.94	8.00	28.60	53.10	-	-
12A-D1F36	19.050	12.57	5.94	7.00	43.00	67.60	70.00	-
12A-D1F37	19.050	12.57	5.94	12.70	41.20	65.80	-	-
12A-D1F41	19.050	12.57	5.94	8.00	15.00	39.30	-	-
12A-D1F46	19.050	12.57	5.94	5.94	16.35	40.65	-	2.60
12A-D1F53	19.050	12.57	5.94	8.00	40.00	64.50	-	-
12A-D1F54	19.050	12.57	5.94	8.10	25.50	49.80	-	2.50
12A-D1F55	19.050	12.57	5.94	8.00	40.00	-	66.10	-
12A-D1F61	19.050	12.57	5.94	7.00	42.00	66.30	-	-
12A-D1F72	19.050	12.57	5.94	8.00	35.00	59.30	-	-

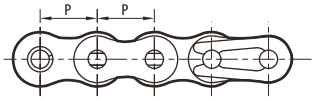

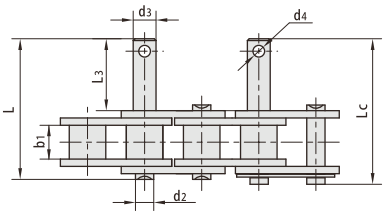

RBL chain number	P mm	b1 mm	d2 mm	d3 mm	L3 mm	L mm	Lc mm	d4 mm
12A-D1F77	19.050	12.57	5.94	5.94	30.00	54.50	-	2.00
12A-D1F79	19.050	12.57	5.94	12.00	19.00	43.30	-	3.00
12A-D1F80	19.050	12.57	5.94	5.94	27.00	51.30	-	2.00
12B-D 1F100	19.050	11.68	5.72	8.00	24.00	45.10	-	-
12B-D 1F106	19.050	11.68	5.72	7.90	36.00	57.20	-	-
12B-D1F42	19.050	11.68	5.72	5.96	16.00	37.30	-	-
12B-D1F43	19.050	11.68	5.72	10.00	40.00	61.30	-	-
12B-D1F51	19.050	11.68	5.72	10.00	18.00	39.30	-	-
12B-D1F55	19.050	11.68	5.72	6.00	20.00	41.10	-	-
12B-D1F77	19.050	11.68	5.72	8.00	40.00	61.10	-	-
12B-D1F81	19.050	11.68	5.72	8.00	26.00	47.10	-	-
12B-D1F85	19.050	11.68	5.72	7.00	22.50	43.60	-	-
12B-D1F94	19.050	11.68	5.72	5.72	14.30	35.40	-	2.00
12B-D3F105	19.050	11.68	5.72	6.00	38.10	59.20	61.00	-
12B-D3F47	19.050	11.68	5.72	6.35	20.00	41.10	-	-
12B-D3F87	19.050	11.68	5.72	5.72	23.40	44.50	-	2.50
12B-d5	19.050	11.68	5.72	8.00	40.00	61.40	63.10	-
12B-D6	19.050	11.68	5.72	6.00	20.00	41.10	42.90	-
12B-D7	19.050	11.68	5.72	8.00	25.00	46.40	48.20	-
16A-D1F35	25.400	15.75	7.92	16.00	14.00	45.20	47.40	-
16A-D1F53	25.400	15.75	7.92	10.00	47.00	78.00	-	3.20
16A-D1F55	25.400	15.75	7.92	7.92	22.00	53.20	-	2.50
16A-D1F67	25.400	15.75	7.92	7.92	46.00	76.90	-	2.00
16A-D1F69	25.400	15.75	7.92	7.92	50.10	81.00	-	3.00
16A-D1F73	25.400	15.75	7.92	8.50	36.20	67.20	-	-
16A-D3F2	25.400	-	7.92	12.70	50.00	-	87.40	-
16A-D3F22	25.400	15.75	7.92	8.40	36.00	67.10	-	-
16A-D3F48	25.400	15.75	7.92	9.00	21.00	51.90	55.70	-
16AF1-D3F1	25.400	15.75	7.92	9.00	20.00	51.20	54.70	2.50
16B-D1F34	25.400	17.02	8.28	12.00	20.50	54.50	-	-
16B-D1F38	25.400	17.02	8.28	14.00	22.00	55.90	-	-
16B-D1F43	25.400	17.02	8.28	10.00	23.10	57.00	-	3.30
16B-D1F48	25.400	17.02	8.28	9.00	25.00	58.90	-	-
16B-D3F30	25.400	17.02	8.28	6.20	19.00	53.00	54.40	1.50
16B-D3F56	25.400	17.02	8.28	10.00	32.00	65.90	68.90	-
20A-D1F11	31.750	18.90	9.53	9.53	20.30	62.00	-	3.00
20A-D1F19	31.750	18.90	9.53	9.53	22.00	60.00	-	2.00
20A-D1F21	31.750	-	9.53	9.53	38.10	-	76.40	-
20B-D3F10	31.750	19.56	10.19	10.19	16.00	54.90	-	3.20
24A-D1F16	38.100	25.22	11.10	11.10	42.00	89.80	-	4.00
24B-D3F2	38.100	25.40	14.63	14.63	99.60	156.60	-	4.00
32A-D1F3	50.800	31.55	14.27	18.00	45.00	106.80	-	-

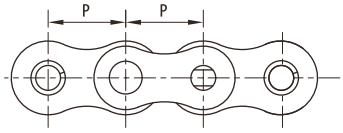

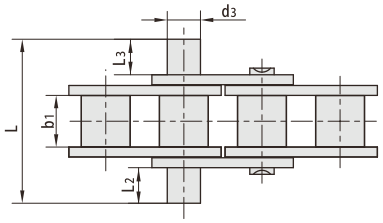

RBL chain number	P mm	b1 mm	d3 mm	L2 mm	L3 mm	L mm
06B-D4	9.525	5.72	3.28	3.00	5.00	19.40
08A-DD1F4	12.700	7.85	3.96	17.80	17.80	49.90
08A-DD3F6	12.700	7.85	3.96	9.50	9.50	33.40
08B-D8	12.700	7.75	4.45	10.00	38.00	62.50
08B-DD3F13	12.700	7.75	4.45	15.20	15.20	44.90
08B-DD3F14	12.700	7.75	4.45	13.00	13.00	40.80
08B-DD3F9-B	12.700	7.75	4.45	3.50	3.50	21.10
08BF7	12.700	7.75	4.45	3.00	5.00	22.80
10A-DD3F3	15.875	9.40	5.08	2.90	2.90	24.00
10A-DD3F4	15.875	9.40	5.08	12.45	12.45	43.00
10B-DD1F41	15.875	9.65	5.08	18.10	18.10	53.20
12A-D7	19.050	12.57	8.10	8.60	8.60	40.00
12A-DD3F3	19.050	12.57	5.94	4.50	4.50	32.00
12A-DD3F5	19.050	12.57	8.10	8.60	8.60	40.00
12A-DD3F6	19.050	12.57	5.94	3.10	3.10	29.00
12A-DD3F7	19.050	12.57	5.94	3.20	3.20	29.40
12B-DD1F1	19.050	11.68	5.72	11.00	11.00	41.70
12B-DD3F3	19.050	11.68	5.72	5.20	5.20	30.00
12B-DD3F6	19.050	11.68	5.72	25.00	25.00	69.70
12B-DD3F7	19.050	11.68	5.72	21.10	21.10	61.80
16A-DD1F2	25.400	15.75	7.92	22.70	22.70	75.00
16A-DD1F4	25.400	15.75	7.92	19.05	19.05	67.20
16A-DD1F6	25.400	15.75	7.92	22.90	22.90	75.00
16B-DD1F13	25.400	17.02	8.28	11.00	11.00	53.80
16B-DD1F9	25.400	17.02	8.28	34.00	34.00	100.00
16B-DD3F10	25.400	17.02	8.28	14.45	14.45	60.60
16B-DD3F4	25.400	17.02	8.28	3.00	3.00	38.00
16BF4	25.400	17.02	8.28	18.00	18.00	68.00
80SHF1-DD1	25.400	15.75	7.92	14.95	32.45	80.00
20A-DD3F3	31.750	18.90	9.53	4.10	4.10	44.00
20A-DD3F4	31.750	18.90	9.53	3.80	3.80	43.40
24B-DD1F3	38.100	25.40	14.63	16.70	16.70	81.00
28B-DD3F3	44.450	30.99	15.90	20.00	20.00	98.70
32A-DD1F1	50.800	31.55	14.27	38.10	38.10	134.50
40B-DD1F1	63.500	38.10	22.89	21.56	21.56	180.00

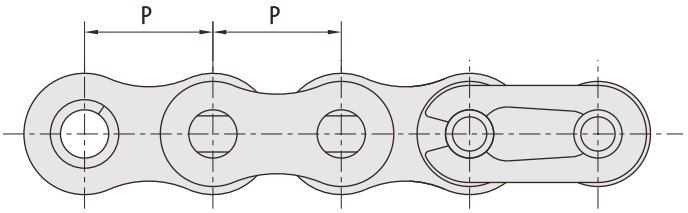

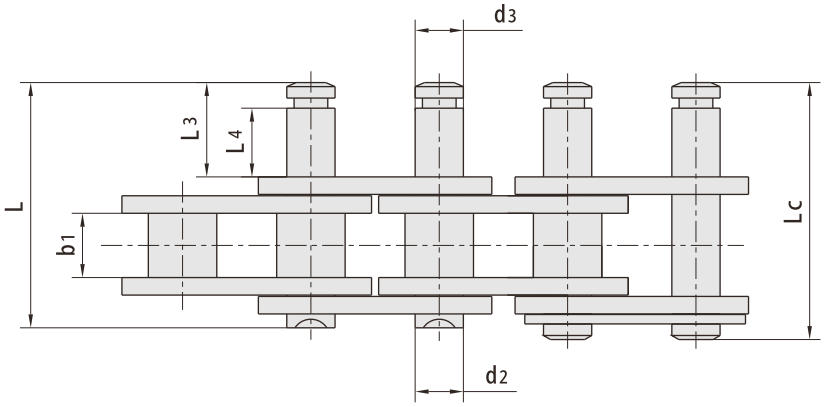

RBL chain number	P mm	b1 mm	d2 mm	d3 mm	L3 mm	L2 mm	L mm	Lc mm
06C-D3F10	9.525	4.77	3.58	3.30	4.80	3.10	16.30	17.30
06C-D3F12	9.525	4.77	3.58	3.58	7.00	5.00	18.50	19.50
A06B-D12	9.525	5.72	3.28	3.28	3.50	1.50	15.80	-
08A-D1F32	12.700	7.85	3.96	3.96	17.55	13.85	33.00	-
08B-D1F60	12.700	7.75	4.45	4.45	9.50	7.00	25.10	26.60
08B-D3F40	12.700	-	4.45	4.45	16.80	14.50	-	34.10
10B-D1F46	15.875	9.65	5.08	5.08	35.00	32.20	53.20	-
10B-D1F49	15.875	9.65	5.08	7.00	10.70	8.00	28.90	-
10B-D1F56	15.875	9.65	5.08	5.08	29.90	26.80	48.10	-
12A-D1F60	19.050	12.57	5.94	5.94	7.00	4.90	-	31.30
12B-D1F86	19.050	11.68	5.72	5.72	25.00	22.60	46.10	-
C12B-D1F111	19.050	11.68	5.72	5.72	10.00	6.80	31.10	32.80
C12BNP-D3F68	19.050	11.68	5.72	5.00	10.50	8.00	31.60	33.30
C12BNP-D3F76	19.050	11.68	5.72	5.00	6.50	4.00	27.60	29.30
16B-D1F11	25.400	17.02	8.28	8.28	37.80	35.40	71.80	73.10
16B-D1F44	25.400	17.02	8.28	8.28	35.40	32.00	69.30	-
16B-D3F59	25.400	17.02	8.28	8.28	26.40	23.00	60.30	61.60
C16A-D1F49	25.400	15.75	7.92	8.00	39.00	35.40	70.10	-

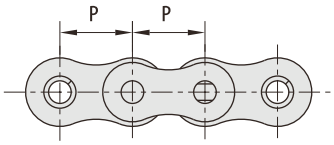

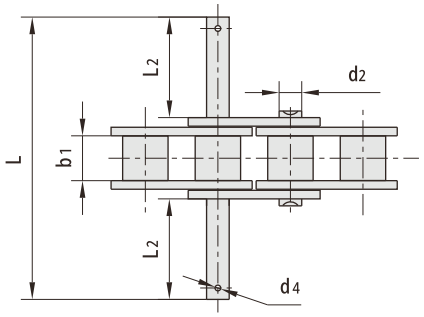

RBL chain number	P mm	b1 mm	d2 mm	d4 mm	L2 mm	L mm
08A-DD1F5	12.700	7.85	3.96	1.00	17.65	49.60
16A-DD1F3	25.400	15.75	7.92	2.60	28.95	87.00
24A-DD1F2	38.100	25.22	11.10	2.50	42.35	130.00

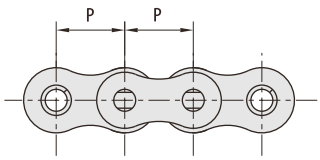

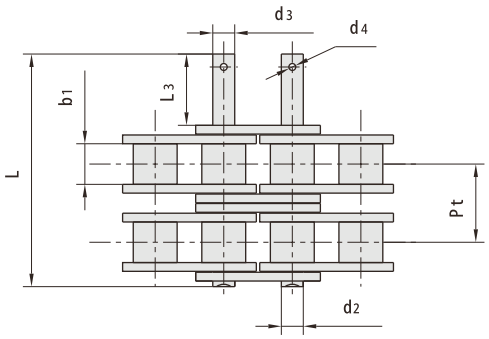

RBL chain number	P mm	b1 mm	d2 mm	d3 mm	d4 mm	L3 mm	L mm	Pt mm
08B-2-D1F39	12.700	7.75	4.45	4.45	1.60	17.70	47.60	13.92
08B-D 3F79-2	12.700	7.75	4.45	7.00	-	25.00	55.10	13.92
10A-2-D3F67	15.875	9.40	5.08	5.08	1.60	16.50	54.10	18.11
12A-2-D3F47	19.050	12.57	5.94	8.00	-	28.00	75.50	22.78
12A-2-D3F48	19.050	12.57	5.94	8.00	-	32.00	79.50	22.78
12A-D3F44-2	19.050	12.57	5.94	8.00	-	18.00	65.20	22.78
12A-D3F85-2	19.050	12.57	5.94	8.00	-	18.00	65.20	66.90
32A-2-D3F2	50.800	31.55	14.27	14.27	4.00	77.89	197.00	58.55

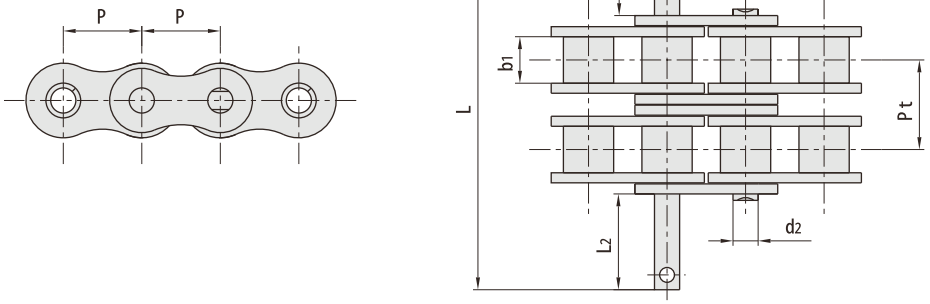

RBL chain number	P mm	b1 mm	d2 mm	d4 mm	L2 mm	L mm	Pt mm
10A-D D 3F2-2	15.875	9.40	5.08	2.00	17.70	47.80	19.70
20A-D D1F4-2	31.750	18.90	9.53	3.20	14.40	110.00	35.76
24A-2-D1 Fl	38.100	25.22	11.10	2.40	42.60	176.00	45.44

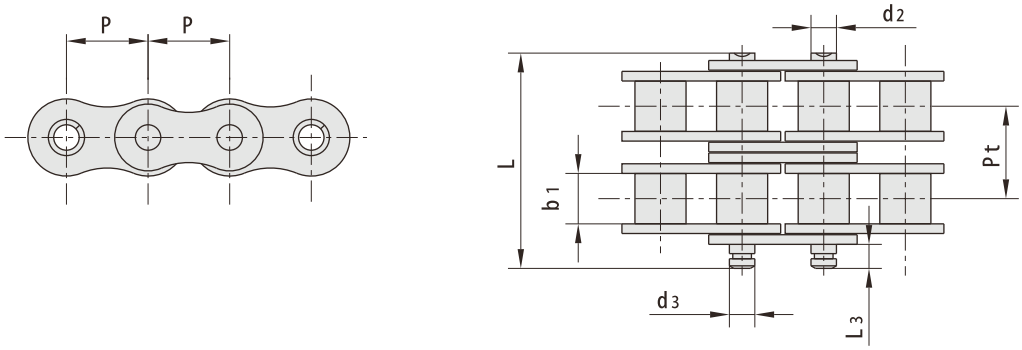

RBL chain number	P mm	b1 mm	d2 mm	d3 mm	L mm	L3 mm	Pt mm
08A-2-D3F39	12.70	7.85	3.96	3.96	33.75	3.90	14.38

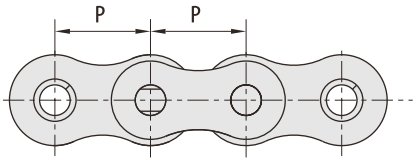

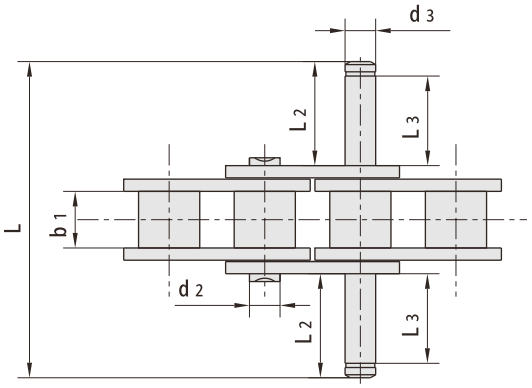

RBL chain number	P mm	b1 mm	d2 mm	d3 mm	L mm	L2 mm	L3 mm
10AF94	15.875	9.40	5.08	5.08	52.50	17.20	14.80
20B-DD1F3	31.750	19.56	10.19	10.19	119.30	41.50	38.35
24B-DD1F2	38.100	25.40	14.63	14.63	149.20	50.80	47.65
24B-DD1F4	38.100	25.40	14.63	14.63	143.20	47.65	43.55
28A-DD1F1	44.450	25.22	12.70	12.60	106.00	28.70	25.70

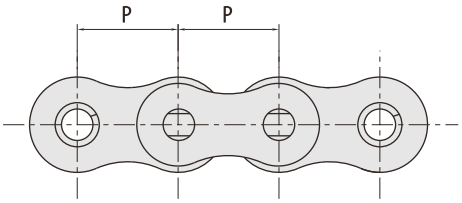

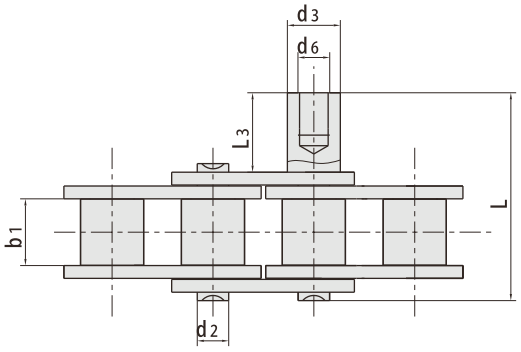

RBL chain number	P mm	b1 mm	d2 mm	d3 mm	L3 mm	L mm	d6 mm
12A-D1F38	19.050	12.57	5.94	9.60	15.00	39.50	M 6
12A-D1F39	19.050	12.57	5.94	9.00	15.00	39.30	M 4
12A-D1F42	19.050	12.57	5.94	10.00	15.00	39.70	M 6
24A-D1F13	38.100	25.22	11.10	25.00	50.00	101.80	18.00
24A-D1F14	38.100	25.22	11.10	25.00	100.00	151.80	18.00
24A-D3F9	38.100	25.22	11.10	25.00	50.00	102.00	18.20
24A-D3F10	38.100	25.22	11.10	25.00	100.00	152.00	18.20

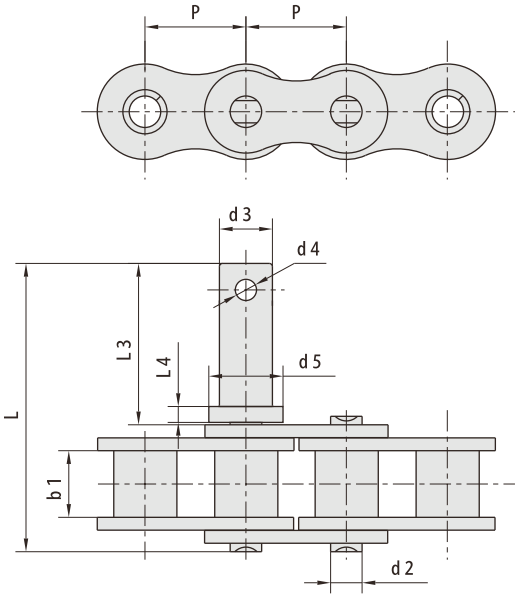

RBL chain number	P mm	b1 mm	L mm	L3 mm	L4 mm	d2 mm	d3 mm	d4 mm	d5 mm
08B-D1F70	12.700	7.75	30.50	14.50	2.50	4.45	6.00	-	9.00
08B-D1F75	12.700	7.75	34.00	18.00	3.00	4.45	7.00	-	10.00
12A-D1F33	19.050	12.57	43.40	19.00	8.00	5.94	12.00	-	12.00
12A-D1F52	19.050	12.57	44.10	18.70	1.50	5.94	8.30	3.00	10.00
12A-D1F57	19.050	12.57	49.30	23.00	2.00	5.94	8.00	2.20	12.00
12A-D1F66	19.050	12.57	42.30	18.00	3.00	5.94	7.00	-	10.00
12A-D1F73	19.050	12.57	54.40	30.00	3.00	5.94	10.00	4.00	14.00
12B-D1F78	19.050	11.68	44.60	23.50	5.50	5.72	7.40	-	12.00
12B-DD1F5	19.050	11.68	52.90	27.70	7.20	5.72	7.70	-	12.00
16A-D1F25	25.400	15.75	56.00	20.00	5.00	7.92	11.00	2.50	16.00
16A-D1F42	25.400	15.75	55.80	24.50	5.50	7.92	8.00	-	12.00
16A-D1F51	25.400	15.75	47.90	17.00	2.50	7.92	8.10	2.20	14.00
16A-D1F58	25.400	15.75	54.70	20.00	4.50	7.92	10.00	2.50	12.70
16A-D1F63	25.400	15.75	54.70	20.00	4.50	7.92	8.00	2.50	12.70
16A-D1F70	25.400	15.75	55.90	25.00	6.00	7.92	8.00	-	12.00
16A-D1F77	25.400	15.75	55.70	21.50	12.00	5.94	8.00	2.00	11.00
16B-D1F32	25.400	17.02	84.40	50.50	12.00	8.28	7.60	2.00	15.00
16B-D1F52	25.400	17.02	60.70	26.50	2.50	8.28	9.00	3.00	12.00
16B-D28	25.400	17.02	75.40	41.00	3.00	8.28	8.25	2.50	13.00
20A-D1F7	31.750	18.90	61.80	23.70	3.70	9.53	14.00	-	20.00
20A-D1F8	31.750	18.90	63.30	25.20	3.70	9.53	14.00	-	20.00
C20AH-D1F1	31.750	18.90	69.50	38.00	3.50	9.53	11.00	-	15.00
24A-D1F19	38.100	25.30	77.00	25.00	3.00	11.10	11.00	3.00	14.00

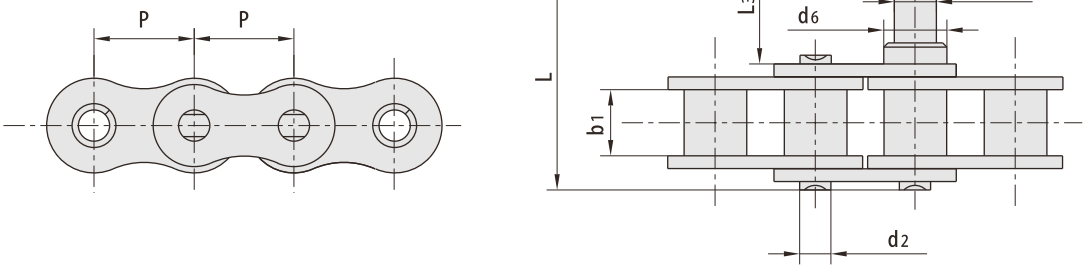

RBL chain number	P mm	b1 mm	L mm	L3 mm	d2 mm	d3 mm	d5 mm	d6 mm
12A-D3F48	19.050	12.57	47.30	23.00	5.94	8.00	12.00	12.00
16A-D1F36	25.400	15.75	55.20	24.00	7.92	12.00	16.00	-
16B-D1F39	25.400	17.02	67.50	33.60	8.28	8.28	16.00	16.00

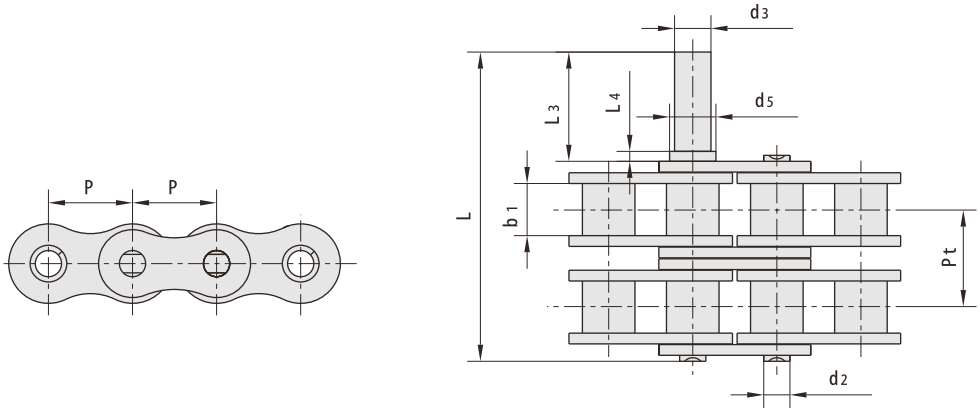

RBL chain number	P mm	b1 mm	L mm	L3 mm	L4 mm	d2 mm	d3 mm	d5 mm	Pt mm
16A-D1F72-2	25.400	15.75	94.00	33.00	3.00	7.92	11.00	14.00	29.29

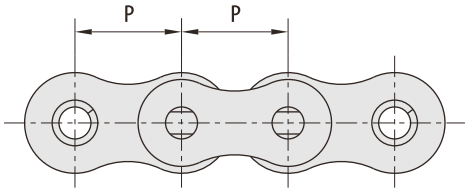

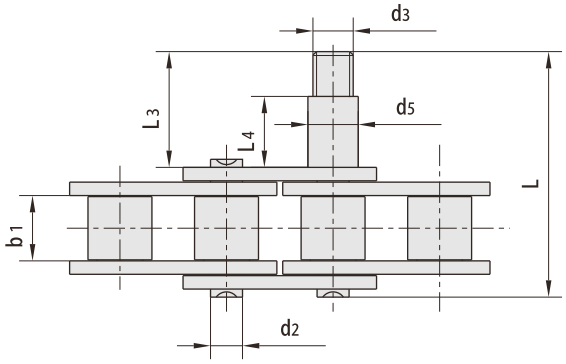

RBL chain number	P mm	b1 mm	L mm	L3 mm	L4 mm	d2 mm	d3 mm	d5 mm
16A-D1F61	25.400	-	57.20	24.00	17.00	7.92	M 8	10.00
20A-D1F17	31.750	18.90	73.00	35.00	23.00	9.53	M 12	15.00

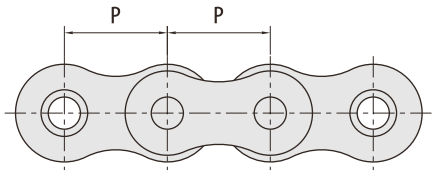

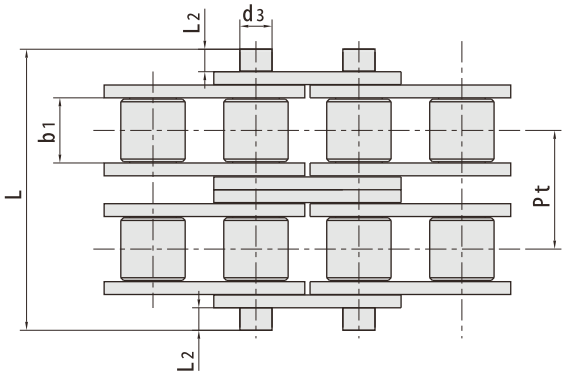

RBL chain number	P mm	b1 mm	L mm	L2 mm	d3 mm	Pt mm
08B-DD3F17-2	12.700	7.75	40.80	6.00	4.45	13.92
08BN P2DD3-15	12.700	7.75	81.80	26.50	4.45	13.92
28B-DD3F3-2	44.450	30.99	172.20	27.00	15.90	59.56
48A-DD3F1-2	76.200	48.20	208.00	16.60	23.81	87.83

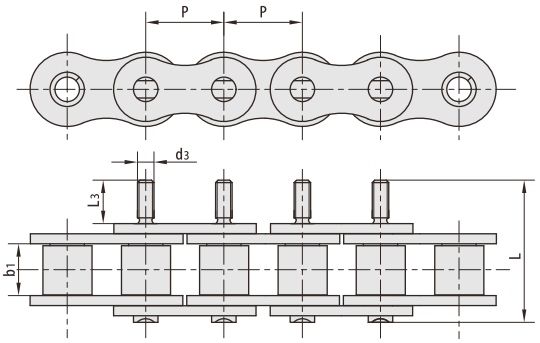

RBL chain number	P mm	b1 mm	d3 mm	L3 mm	L mm
12A-D3F32	19.050	12.57	M 4	10.30	34.60
12AF19	19.050	12.57	M 4	10.00	34.50
12AF108	19.050	12.57	M 4	10.80	35.20
12BF13	19.050	11.68	M 4	10.00	31.00
12BF102	19.050	-	M 5	12.45	33.45

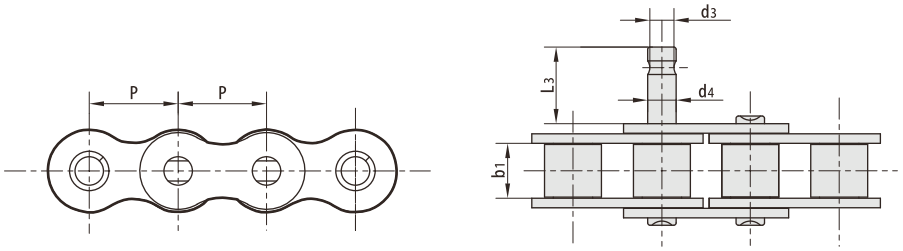

RBL chain number	P mm	b1 mm	d3 mm	d4 mm	L3 mm
10B-D12	15.875	9.65	4.50	5.08	12.00
10B-D1F27	15.875	9.65	5.08	4.50	13.00
10B-D9	15.875	9.65	4.50	5.08	13.00
12B-D1F58	19.050	11.68	5.72	5.00	13.00
12B-D8	19.050	11.68	5.15	5.72	13.00
20A-D1F15	31.750	18.90	10.00	11.10	56.90

Small roller type

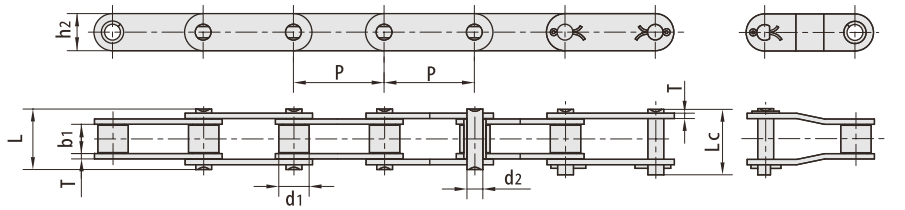

Large roller type

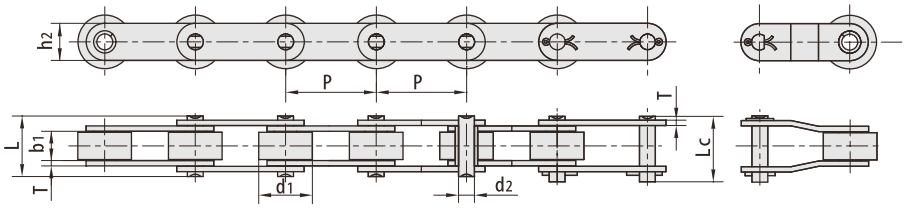

RBL chain number	Pitch	Roller diameter	Width between inner plates	Pin diameter	Pin length		Inner plate depth	Plate thickness	Tensile strength	Average Tensile strength	Weight
	P	d1 max	b1 min	d2 max	L max	Lc max	h2 max	T max	Pt	Q min	q
	mm	mm	mm	mm	mm	mm	mm	mm	mm	kN/bf	kg/n
C2040 C2042	25.40	7.95 15.88	7.85	3.96	16.6	17.8	12.0	1.50	14.1/3205	16.7	0.50 0.84
C2040H C2042H	25.40	7.95 15.88	7.85	3.96	18.8	19.9	12.0	2.03	14.1/3205	17.2	0.65 1.00
C208B C208BL	25.40	8.51 15.88	7.75	4.45	16.7	18.2	11.8	1.60	18.0/4091	19.4	0.55 0.89
C2050 C2052	31.75	10.16 19.05	9.40	5.08	20.7	22.2	15.0	2.03	22.2/5045	28.1	0.78 1.27
C210B C210BL	31.75	10.16 19.05	9.65	5.08	19.5	20.9	14.7	1.70	22.4/5036	24.6	0.75 1.21
C2060 C2062	38.10	11.91 22.23	12.57	5.94	25.9	27.7	18.0	2.42	31.8/7227	36.8	1.12 1.61
C2060H C2062H	38.10	11.91 22.23	12.57	5.94	29.2	31.6	18.0	3.25	31.8/7227	41.6	1.44 2.07
C212B C212BL	38.10	12.07 22.23	11.68	5.72	22.5	24.2	16.0	1.85	29.0/6519	31.9	0.90 1.55
C2080 C2082	50.80	15.88 28.58	15.75	7.92	32.7	36.5	24.0	3.25	56.7/12886	65.7	2.08 3.12
C2080H C2082H	50.80	15.88 28.58	15.75	7.92	36.2	39.4	24.0	4.00	56.7/12886	70.0	2.54 3.58
C216B C216BL	50.80	15.88 28.58	17.02	8.28	36.1	39.1	21.0	4.15/3.10	60.0/13489	66.0	2.14 3.27
C2100 C2102	63.50	19.05 39.67	18.90	9.53	40.4	44.7	30.0	4.00	88.5/20114	102.6	3.01 4.83
C2100H C2102H	63.50	19.05 39.67	18.90	9.53	43.6	46.9	30.0	4.80	88.5/20114	112.4	3.56 5.38
C220B C220BL	63.50	19.05 39.67	19.56	10.19	41.3	45.0	26.4	4.50/3.50	95.0/21357	104.5	2.93 5.01
C2120 C2122	76.20	22.23 44.45	25.22	11.10	50.3	54.3	35.7	4.80	127.0/28864	147.3	4.66 7.66
C2120H C2122H	76.20	22.23 44.45	25.22	11.10	53.5	57.5	35.7	5.60	127.0/28864	160.9	5.26 8.26
C224B C224BL	76.20	25.40 44.45	25.40	14.63	53.4	57.8	33.2	6.00/4.80	160.0/35969	176.0	5.17 7.88
C2160 C2162	101.60	28.58 57.15	31.75	14.27	64.8	69.6	47.8	6.40	226.8/51545	278.9	8.15 13.00
C2160H C2162H	101.60	28.58 57.15	31.75	14.27	68.2	73.0	47.8	7.20	226.8/51545	285.8	9.06 13.84

Small roller type

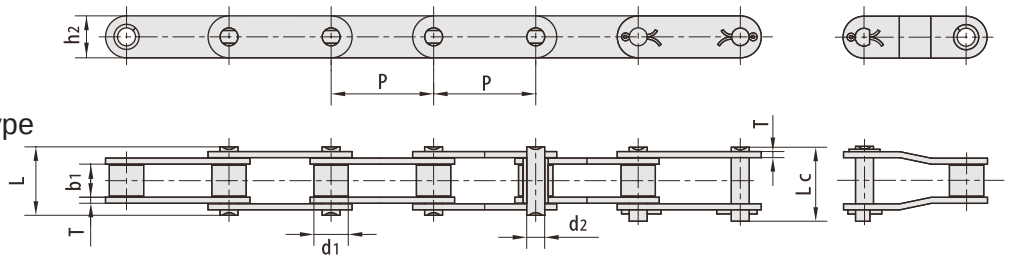

Large roller type

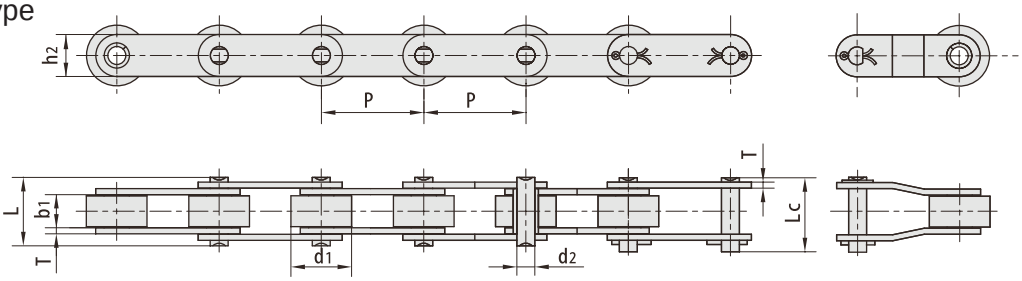

RBL chain number	Pitch	Roller diameter	Width between inner plates	Pin diameter	Pin length		Inner plate depth	Plate thickness	Tensile strength	Average Tensile strength	Weight
	P mm	d1 max mm	b1 min mm	d2 max mm	L max mm	Lc max mm	h2 max mm	T max mm	Pt mm	Q min kN/bf	q kg/n
208AF17	25.40	7.95	4.00	3.96	12.75	15.00	12.00	1.50	13.80/3102	15.2	0.40
208AF18	25.40	7.95	5.10	3.96	13.76	16.00	12.00	1.50	13.80/3102	15.2	0.38
208BF45	25.40	8.51	47.64	4.45	57.00	58.50	11.80	1.60	17.80/4001	19.6	1.15
C208BF3	25.40	8.51	7.95	4.45	16.70	-	11.80	1.50	10.00/22480	11.5	0.61
C2050F12	31.75	10.16	9.52	5.08	20.20	21.70	15.00	2.03	18.53/4165	20.0	1.05
C2052F51	31.75	19.05	9.40	5.08	20.70	-	15.00	2.03	21.80/4901	24.0	0.81
2060F75	38.10	11.91	16.07	5.94	29.50	31.90	18.00	2.42	31.10/6991	34.2	1.11
212BHF1	38.10	12.07	11.68	5.94	25.20	28.00	40.80	2.42	31.80/7149	36.6	2.73
C2060F28	38.10	11.91	12.57	5.72	25.90	27.70	20.00	2.42	28.90/6496	32.4	1.40
C2060F75	38.10	11.91	16.07	5.94	29.50	31.90	18.00	2.42	31.10/6991	34.2	1.32
C2062F101	38.10	22.23	12.57	5.94	35.00	-	18.00	2.42	31.10/6991	34.2	1.98
C2062F95	38.10	22.23	12.70	5.94	25.80	29.30	18.00	2.42	24.00/5395	26.4	2.20
C212BF2	38.10	12.07	11.68	5.72	22.50	25.50	35.00	1.85	28.90/6496	33.3	1.88
C212BF9	38.10	12.07	11.68	5.72	22.50	25.20	20.00	1.85	28.90/6496	33.3	1.10

Small roller type

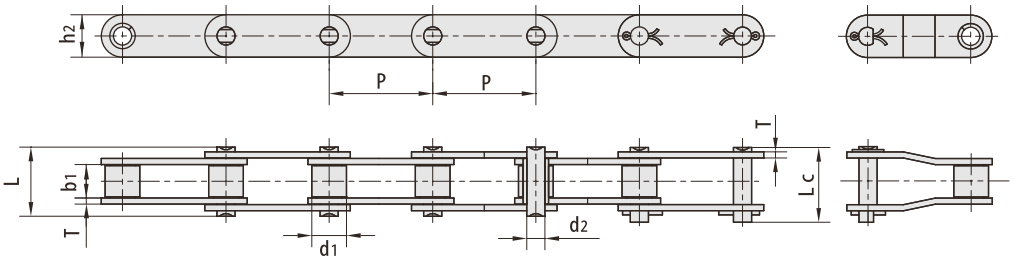

Large roller type

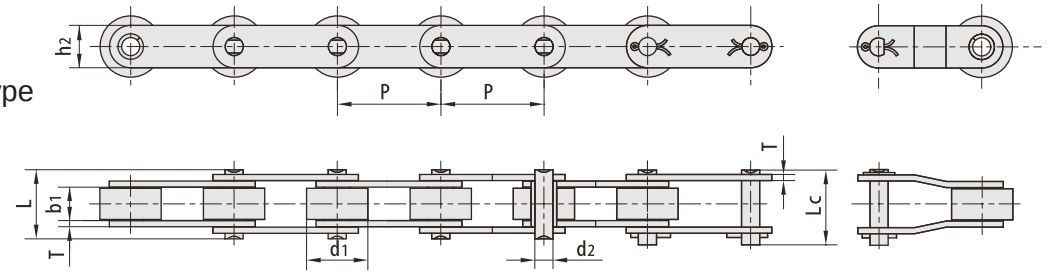

RBL chain number	Pitch	Roller diameter	Width between inner plates	Pin diameter	Pin length		Inner plate depth	Plate thickness	Tensile strength	Average Tensile strength	Weight
	P	d1 max	b1 min	d2 max	L max	Lc max	h2 max	T max	Pt	Q min	q
	mm	mm	mm	mm	mm	mm	mm	mm	mm	kN/bf	kg/n
2082HF83	50.80	28.58	15.75	7.92	36.20	38.90	29.00	4.00	56.7/12746	62.4	3.90
216BF4	50.80	15.88	17.90	8.28	36.10	39.10	21.00	3.70	60.0/13488	66.0	1.80
C2060H-50.8F1	50.80	11.91	12.57	5.94	29.20	31.00	17.20	3.25	31.1/6991	34.2	2.67
C2080HF1	50.80	15.88	15.75	7.92	36.20	39.40	23.00	4.00	55.6/12499	61.1	2.49
C2080HF51	50.80	18.00	32.00	7.92	54.00	57.50	24.00	4.00	55.6/12499	61.1	2.66
C2080HF87	50.80	18.00	32.00	7.92	52.80	56.00	24.00	4.00	55.6/12499	61.2	2.67
C2082HF94	50.80	25.40	15.75	7.92	36.20	39.40	23.00	4.00	60.0/13488	66.0	3.23
C216BF1	50.80	15.88	17.02	8.28	36.10	39.10	20.00	4.00/3.00	60.0/13488	66.0	2.01
220BF1	63.50	19.05	19.56	10.19	36.50	37.60	27.00	3.00	65.0/14612	74.7	1.81
220BF3	63.50	19.05	19.56	10.19	42.30	43.40	26.40	4.50/4.00	56.7/12746	62.4	2.68
C220AH-BF1	63.50	19.05	18.90	9.53	43.60	46.90	30.00	4.80	86.7/19490	95.5	3.74
C224AHF2	76.20	27.20	25.22	11.10	-	57.50	35.70	5.60	124.6/280112	139.5	5.78
C224AHLF5	76.20	43.00	25.22	11.10	53.50	-	35.70	5.60	124.6/280112	142.6	7.94
C232BF1	101.60	29.21	30.99	17.81	68.00	73.00	42.00	7.00	250.0/56200	275.0	7.85

K1

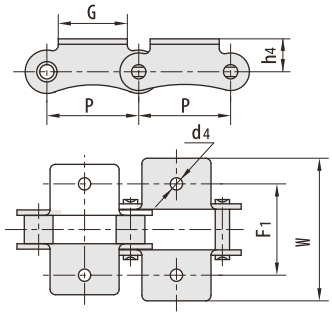

SK1

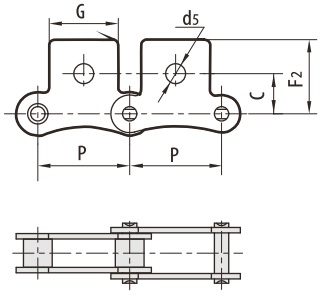

SK2

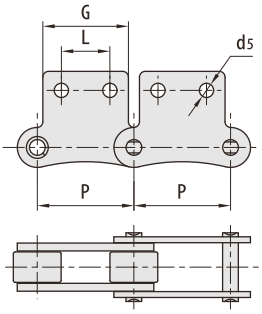

RBL chain number	P mm	G mm	F1 mm	W mm	h4 mm	d4 mm	C mm	F2 mm	d5 mm
2040	25.40	19.1	25.4	39.6	9.1	3.4	11.1	20.5	5.5
2050	31.75	23.8	31.8	49.0	11.1	5.5	14.3	25.0	6.6
2060	38.10	28.6	42.9	67.8	14.7	5.5	17.5	32.9	9.2
2080	50.80	38.1	55.6	87.8	19.1	6.8	22.2	43.5	11.0
2100	63.50	47.6	66.6	107.5	23.4	9.2	28.6	50.4	13.0
2120	76.20	57.2	79.3	121.4	27.8	10.5	33.3	55.5	15.0
208B	25.40	23.2	25.4	39.6	9.1	4.5	11.1	20.5	5.5
210B	31.75	23.8	31.8	49.0	11.1	5.5			
212B	38.10	35.0	38.1	57.0	14.7	6.6			
216B	50.80	44.0	50.8	84.0	19.1	6.6			
220B	63.50	52.0	63.5	104.0	23.4	8.4			
224B	76.20	60.0	76.2	120.0	27.8	10.5			

RBL chain number	P mm	G mm	L mm	F1 mm	W mm	h4 mm	d4 mm	C mm	F2 mm	ds mm
208BA1F4	25.40	23.80	-	26.20	39.40	10.00	4.30	-	-	-
2060HK1F26	38.10	28.60	-	42.90	67.80	14.70	8.50	-	-	-
212BK2F2	38.10	36.20	-	34.90	55.50	13.00	6.20	-	-	-
212BA0F1	38.10	50.80	-	-	72.80	14.70	-	-	-	-
216BSA2F1	50.80	45.00	25.50	-	-	-	-	30.00	40.00	7.50

A1

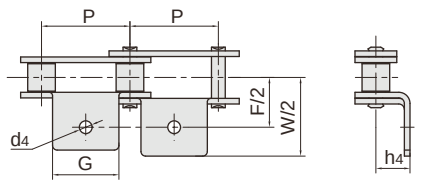

K1

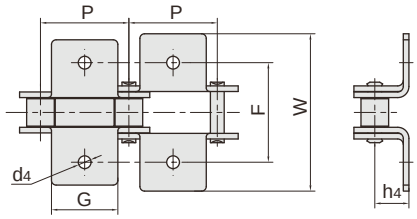

A2

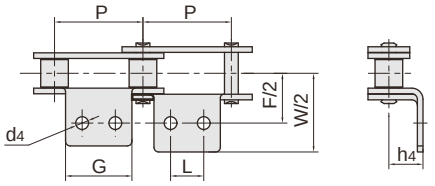

K2

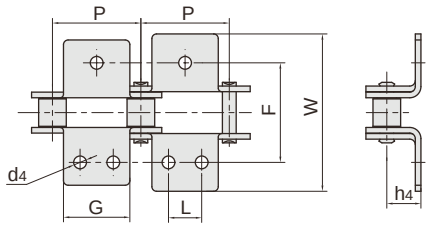

RBL ANSI chain number	P mm	G mm	L mm	F mm	W mm	h4 mm	d4 mm
C2040 C2042	25.40	19.1	9.5	25.4	39.6	9.1	3.4
C208B C208BL	25.40	23.2	12.7	25.4	39.6	9.1	4.5
C2050 C2052	31.75	23.8	11.9	31.8	49.0	11.1	5.5
C2060 C2062	38.10	28.6	14.3	42.9	67.8	14.7	5.5
C2060H C2062H	38.10	28.6	14.3	42.9	67.8	14.7	5.5
C2080 C2082	50.80	38.1	19.1	55.6	87.8	19.1	6.8
C2080H C2082H	50.80	38.1	19.1	55.6	87.8	19.1	6.8
C2100 C2102	63.50	47.6	23.8	66.6	107.5	23.4	9.2
C2100H C2102H	63.50	47.6	23.8	66.6	107.5	23.4	9.2
C2120 C2122	76.20	57.2	28.6	79.3	121.4	27.8	11.0
C2120H C2122H	76.20	57.2	28.6	79.3	121.4	27.8	11.0
C2160 C2162	101.60	76.2	38.1	104.7	151.6	36.5	13.1
C2160H C2162H	101.60	76.2	38.1	104.7	151.6	36.5	13.1

A1

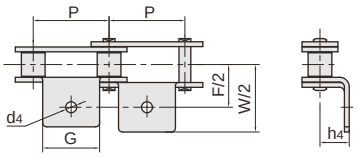

K1

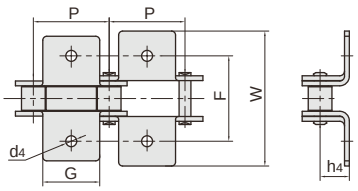

A2

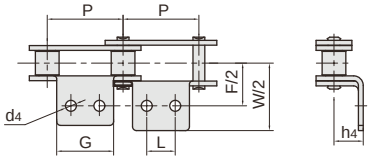

K2

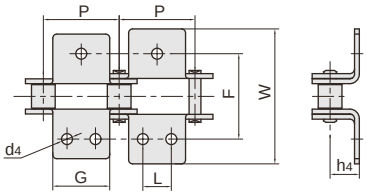

RBL ANSI chain number	P mm	G mm	L mm	F mm	W mm	h4 mm	d4 mm
C2040A1F3	25.40	19.00	-	25.4	38.20	19.80	5.30
C2040A1F4	25.40	19.10	-	25.4	36.20	9.10	5.00
C2040A2F1	25.40	19.00	9.00	25.4	38.40	9.00	5.20
C2040A2F18	25.40	19.10	9.50	25.4	39.60	9.10	M 4
C2040K1F6	25.40	19.10	-	25.4	39.60	9.10	M 5
C2040K1F8	25.40	19.00	-	25.4	39.60	9.10	6.50
C2042A1F4	25.40	19.00	-	25.4	39.60	9.10	5.00
C2042F1	25.40	19.00	-	25.4	40.00	9.00	5.20
C2042HK1F1	25.40	19.00	-	47.0	60.00	9.10	7.00
C2042K2F4	25.40	20.00	12.00	26.4	35.40	9.00	M 4
C208AF1	25.40	19.00	-	25.7	38.30	8.80	4.10
C208BA1F8	25.40	14.80	-	25.6	37.80	9.80	5.50
C208BA2F2	25.40	23.20	12.70	25.4	39.60	9.10	M 5
C208BA2F3	25.40	23.20	9.50	25.4	39.70	9.10	4.50
C208BHK1F7	25.40	23.20	-	25.4	39.60	9.10	6.50
C208BK1F11	25.40	23.20	-	25.4	39.60	9.10	6.50
C2050A1F6	31.75	23.80	-	31.8	49.00	11.40	6.30
C2052A2F1	31.75	19.00	11.90	31.8	49.00	11.10	6.00
C2052A2F2	31.75	19.00	15.88	31.8	49.00	11.10	5.50
C2052A2F3	31.75	25.80	12.70	31.8	49.20	11.10	4.80
C2052K1F10	31.75	25.00	-	32.5	57.00	11.10	5.50
C2060A1F38	38.10	28.60	-	42.9	67.80	14.70	5.50
C2060A2F26	38.10	30.00	18.00	38.0	50.00	14.70	5.50
C2060A2F27	38.10	30.00	18.00	44.0	62.00	14.70	5.50
C2060A2F93	38.10	50.00	30.00	44.0	63.00	30.00	9.00
C2060HA1F12	38.10	28.00	-	43.4	61.80	13.90	6.60

A1

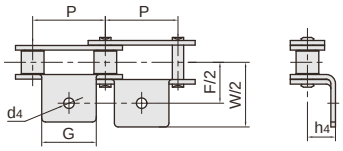

K1

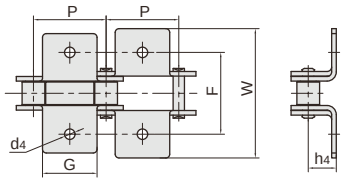

A2

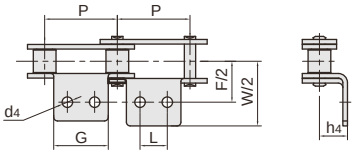

K2

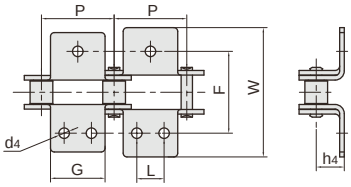

RBL ANSI chain number	P mm	G mm	L mm	F mm	W mm	h4 mm	d4 mm
C2060HA2F26	38.10	46.00	32.00	42.0	56.00	15.70	5.50
C2060HF3A2	38.10	28.60	14.30	42.9	67.80	14.70	5.20
C2060HK1F	38.10	28.60	-	42.9	67.80	14.70	8.00
C2060HK1F22	38.10	28.60	-	42.9	67.80	14.70	8.50
C2060HK1F26	38.10	28.60	-	42.9	67.80	14.70	9.20
C2060HK1F33	38.10	28.60	-	42.9	67.80	14.70	8.90
C2060HK2F3	38.10	28.60	14.30	42.9	64.80	14.70	5.00
C2060HK2F94	38.10	28.00	14.30	42.8	60.40	14.70	5.60
C2060K1F1	38.10	28.60	-	42.9	68.00	14.70	8.50
C2060K1F3	38.10	76.20	-	104.7	151.60	36.50	13.10
C2060K1F32	38.10	29.00	-	43.5	63.50	14.85	8.50
C2062A1F13	38.10	30.00	-	70.2	98.00	14.70	8.50
C2062A1F36	38.10	28.60	-	42.9	67.80	12.50	6.80
C2062A2F22	38.10	28.60	14.30	42.9	57.40	14.70	5.50
C2062A2F24	38.10	28.60	14.30	42.9	67.80	14.70	4.76
C2062A2F6	38.10	28.60	14.30	42.9	67.80	14.70	6.00
C2062HA1F25	38.10	28.00	-	59.0	75.00	9.00	6.00
C2062HA1F4	38.10	20.00	-	45.8	65.80	9.00	6.80
C2062HA1F7	38.10	28.60	-	42.9	67.80	14.70	5.20
C2062HA2F18	38.10	28.60	14.30	42.2	57.00	14.70	5.50
C2062HA2F7	38.10	28.60	14.30	42.9	67.80	14.70	6.50
C2062HF15	38.10	28.60	14.30	42.9	67.80	14.70	M 5
C2062HK1F5	38.10	28.60	-	42.9	67.80	14.70	7.90
C2062HK2F4	38.10	28.60	14.30	42.9	56.40	14.70	5.20
C2062HK2F5	38.10	28.60	14.30	55.6	76.00	11.10	5.50
C2062K2F7	38.10	28.60	14.30	42.9	67.80	14.70	6.50
C2080A1F78	50.80	38.10	-	55.6	87.80	19.10	6.50

A1

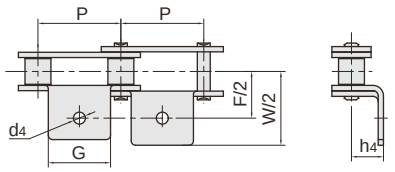

K1

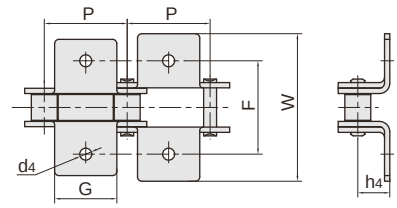

A2

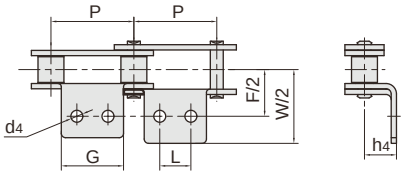

K2

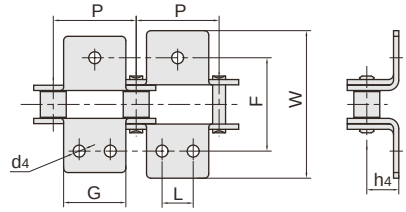

RBL ANSI chain number	P mm	G mm	L mm	F mm	W mm	h4 mm	d4 mm
C2080A2F78	50.80	64.00	40.00	68.0	88.00	30.00	9.00
C2080HA2F12	50.80	38.10	19.10	55.6	73.00	19.10	8.10
C2080HF	50.80	38.10	19.10	55.6	75.20	17.80	10.00
C2080HK1F13	50.80	38.10	-	55.6	80.00	19.10	9.00
C2080HK1F24	50.80	38.10	-	55.6	87.80	19.10	11.11X7.94
C2080HK1F8	50.80	38.10	-	55.6	87.80	19.10	9.00
C2082A1F22	50.80	38.10	-	49.6	76.20	16.00	10.50
C2082A1F79	50.80	39.00	-	59.0	78.50	23.00	7.00
C2082A2F1	50.80	39.00	19.00	58.0	82.00	21.50	7.00
C2082A2F2	50.80	39.00	19.00	58.0	82.00	21.50	10.00
C2082A2F23	50.80	65.00	44.00	62.0	86.00	19.40	7.00
C2082A2F26	50.80	40.00	18.00	62.0	86.00	19.10	7.00
C2082A2F27	50.80	38.10	19.10	55.6	87.80	19.10	8.20
C2082F64K2	50.80	34.90	20.00	54.0	79.00	16.00	M 6
C2082F88K1	50.80	35.00	-	60.0	79.00	16.50	8.00
C2082HA1F17	50.80	38.10	-	55.6	87.80	19.10	9.50
C2082H A1F21	50.80	38.10	-	55.6	88.30	19.10	10.20
C2082HA1F6	50.80	38.10	-	55.6	77.80	19.10	10.00
C2082HA1F76	50.80	38.10	-	55.6	87.80	19.10	8.50
C2082HA1F78	50.80	38.10	-	55.6	87.80	19.10	M 8
C2082HA2F22	50.80	60.00	40.00	62.6	82.60	39.50	9.00
C2082HA2F6	50.80	38.10	19.10	55.6	87.80	19.10	8.00
C2082HA2F77	50.80	38.10	19.10	55.6	87.80	19.10	8.50
C2082HHA1F4	50.80	38.10	-	55.6	87.80	19.10	9.50
C2082HHA1F5	50.80	38.10	-	55.6	87.80	19.10	10.50

A1

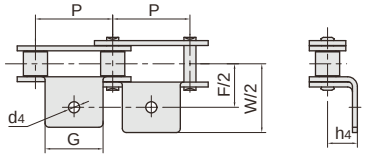

A2

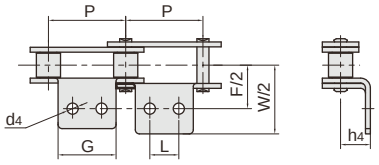

K1

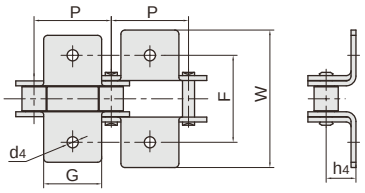

K2

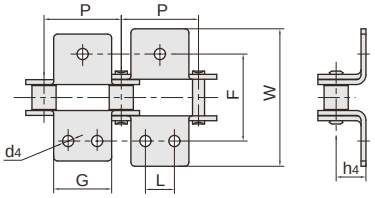

RBL ANSI chain number	P mm	G mm	L mm	F mm	W mm	h4 mm	d4 mm
C2082HK1F23	50.80	38.10	-	55.6	87.80	19.10	8.00
C2082HK1F5	50.80	38.10	-	55.6	79.60	19.10	8.00
C2082HK1F7	50.80	38.10	-	55.6	79.60	19.10	6.50
C2082HK1F79	50.80	50.80	-	55.6	87.80	19.10	6.80
C2082HK1F80	50.80	38.10	-	55.6	87.80	19.10	6.00
C2082HK1F81	50.80	38.10	-	55.6	87.80	19.10	8.20
C2082HK1F9	50.80	38.10	-	55.6	81.50	19.10	M 8
C2082K2F5	50.80	38.10	19.10	120.0	140.00	19.10	6.80
C216BA2F9	50.80	42.00	25.40	50.8	70.80	18.00	6.20
C2100HK1F1	63.50	47.60	-	66.0	92.00	25.00	12.50
C2102H A1F16	63.50	47.60	-	66.6	107.50	23.40	11.20
C2102HA1F3	63.50	47.60	-	66.0	96.60	23.40	12.40
C2102HA1F4	63.50	47.60	-	66.6	107.50	23.40	10.00
C2102HA2F3	63.50	47.60	23.80	66.6	99.80	23.40	3/8"
C2102HA2F4	63.50	47.60	23.80	66.6	107.50	23.40	10.00
C220AHA2F2	63.50	47.60	23.80	66.6	107.50	23.40	9.20
C220AHK1F1	63.50	47.60	-	66.0	92.00	25.00	12.50
C220ALA1F11	63.50	47.60	-	66.6	107.40	23.40	9.20
C220ALA1F5	63.50	47.60	-	76.6	107.50	23.40	11.00
C220ALA1F8	63.50	47.60	-	66.6	107.40	23.40	8.70
C220ALA1F9	63.50	47.60	-	68.6	109.60	23.40	M 8
C220ALA2F5	63.50	52.00	31.00	66.6	107.40	23.40	9.20
C2122HA1F3	76.20	57.20	-	79.3	121.58	27.80	14.00
C224AHA2F9	76.20	72.00	40.00	79.3	121.40	27.80	13.00
C224AHK2F2	76.20	72.00	40.00	79.3	121.40	27.80	13.00
C2162A2F1	101.60	76.20	38.10	104.7	151.50	36.50	18.00
C2162HA2F2	101.60	36.50	38.10	104.7	151.60	36.50	18.00
C2162HA2F3	101.60	76.20	38.10	120.0	167.00	36.50	13.10
C2162HF1A2	101.60	76.20	38.10	104.6	151.60	36.50	13.10
C2162HK1-M8	101.60	76.20	-	110.0	149.60	37.50	M 8

AA1

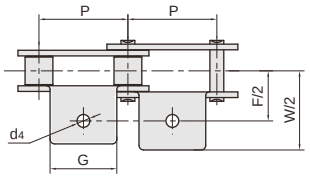

AA2

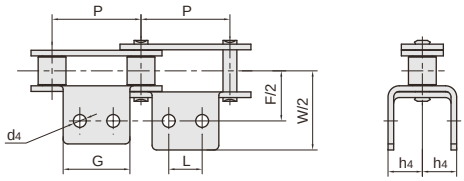

KK1

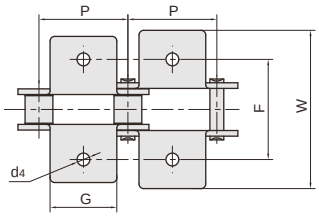

KK2

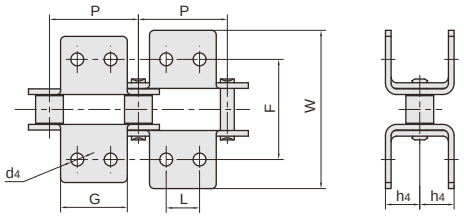

RBL ANSI chain number	P mm	G mm	L mm	F mm	W mm	h4 mm	d4 mm
C2040 C2042	25.40	19.1	9.5	25.4	39.6	9.10	3.4
C208B C208BL	25.40	23.2	12.7	25.4	39.6	9.10	4.5
C2060 C2062	38.10	28.6	14.3	42.9	67.8	14.70	5.5
C2080 C2082	50.80	38.1	19.1	55.6	87.8	19.10	6.8
C2080H C2082H	50.80	38.1	19.1	55.6	87.8	19.10	6.8
100HAA1F1	31.75	35.0	-	71.2	93.4	35.75	8.0
A2050AA1F1	31.75	20.0	-	47.0	66.0	35.50	8.1
2060AA2F1	38.10	38.1	19.0	37.5	57.5	14.80	6.5
C2062AA1F1	38.10	14.0	-	33.4	52.0	9.00	6.4
C2080K1F4	50.80	38.1	-	80.0	112.0	15.30	8.5
C2082HAA1F1	50.80	25.0	-	78.8	128.8	17.50	8.0
C2082HAA1F2	50.80	25.0	-	77.8	127.8	17.50	12.0
C2100HF6AA1	63.50	47.8	-	68.0	100.0	23.40	10.0
C2120AA1F1	76.20	31.8	-	88.7	115.6	35.00	10.5
C2122HAA1	76.20	57.2	-	79.3	121.4	27.80	11.0

SA1

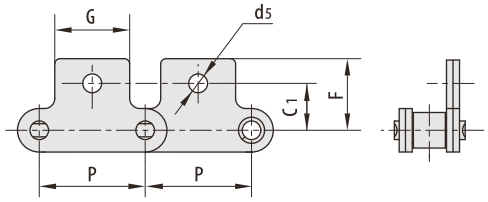

SK1

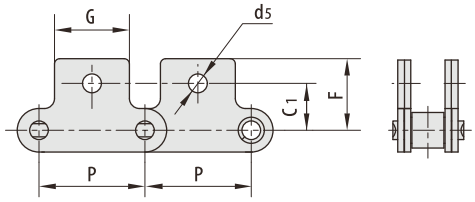

SA2

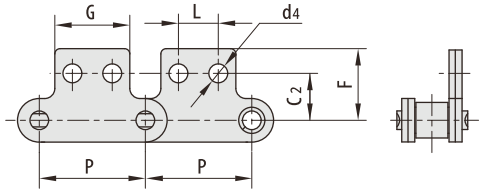

SK2

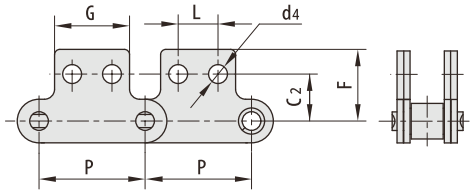

RBL ANSI chain number	P mm	G mm	L mm	C1 mm	C2 mm	F mm	d4 mm	d5 mm
C2040 C2042	25.40	19.10	9.50	11.1	13.50	20.5	3.4	5.50
C208B C208BL	25.40	23.20	12.70	11.1	13.50	20.5	4.5	5.50
C2050 C2052	31.75	23.80	11.90	14.3	15.90	25.0	5.5	6.60
C2060 C2062	38.10	28.60	14.30	17.5	19.10	32.9	5.5	9.20
C2060H C2062H	38.10	28.60	14.30	17.5	19.10	32.9	5.5	9.20
C2080 C2082	50.80	38.10	19.10	22.2	25.40	43.5	6.6	11.00
C2080H C2082H	50.80	38.10	19.10	22.2	25.40	43.5	6.6	11.00
C2100 C2102	63.50	47.60	23.80	28.6	31.80	50.4	8.4	13.00
C2100H C2102H	63.50	47.60	23.80	28.6	31.80	50.4	8.4	13.00
C2042HW SA2	25.40	37.30	9.50	-	13.50	20.5	3.4	-
C2050HW SA2F1	31.75	46.75	31.75	-	15.90	25.0	5.5	-
C2060SA2F1	38.10	28.60	14.30	-	19.10	26.1	5.5	-
C2062HSK2F1	38.10	28.60	14.30	-	19.10	23.8	5.2	-
C2060HSK1F1	38.10	28.60	-	17.3	-	30.0	-	11.80
C216AH2F	50.80	38.10	19.10	-	25.40	43.5	6.5	-
C2082F58SA1	50.80	38.50	-	27.0	-	39.5	-	8.10
C2100HSA1	63.50	47.60	-	28.6	-	50.4	-	13.00
C224ALSK2F1	76.20	57.20	28.60	-	37.30	59.9	-	11.00
C2122HSA1F1	76.20	57.20	-	37.30	-	59.90	-	14.30
C224AHLSA2F1	76.20	57.20	28.60	-	37.30	59.9	-	9.53
208BSK1F2	25.40	14.00	-	17.7	-	21.3	-	3.20
208BSK1F3	25.40	13.00	-	14.7	-	26.7	-	3.10
208BSK1F4	25.40	24.20	-	14.3	-	20.5	-	4.20

SA1

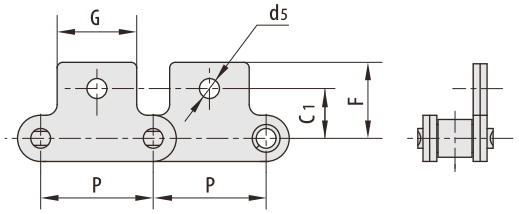

SK1

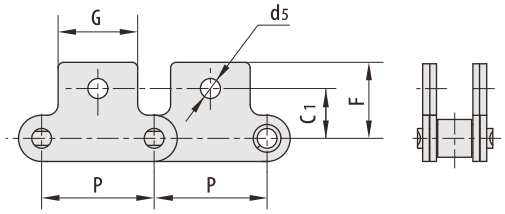

SA2

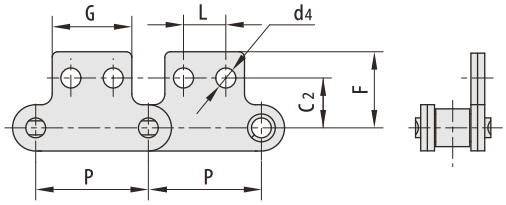

SK2

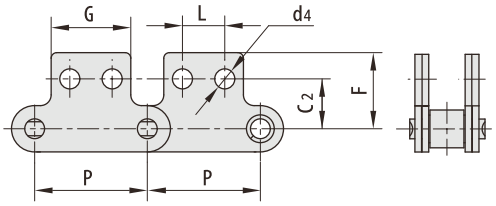

RBL ANSI chain number	P mm	G mm	L mm	C1 mm	C2 mm	F mm	d4 mm	d5 mm
C2040F23SK0	25.40	19.10	-	-	-	25.70	-	-
C208BSK2F2	25.40	23.20	12.70	-	13.02	20.17	4.50	-
C208BSA2F2	25.40	31.80	22.00	-	18.30	22.80	4.50	-
C2050SK1F2	31.75	24.80	-	17.00	-	36.00		15.00
C2050SA0F6	31.75	46.75	-	-	-	15.50	-	-
C210BSA2F3	31.75	30.00	18.00	-	21.00	28.00	5.50	-
C2060HSF6SK2	38.10	28.60	14.30	-	19.10	32.90	6.50	-
C2062HSA1F2	38.10	28.60	-	17.50	-	30.50		8.30
C2060SK0F4	38.10	20.00	-	-	-	49.00	-	-
C2082SA1F2	50.80	38.10	-	27.70	-	39.70	-	8.20
C2080HF91	50.80	38.10	-	-	-	43.50	-	-
C220AHSA2F1	63.50	47.60	23.80	-	31.80	50.40	8.70	-
C224ALSK2F2	76.20	57.20	28.60	-	37.50	52.50	12.50	-
C224AHSK1F2	76.20	57.20	-	43.80	-	59.02	-	17.60
C224AHLSA2F2	76.20	57.00	28.60	-	37.30	58.90	11.00	-
C2160HSK0F1	101.60	40.00	-	-	-	17.50	-	-

SAA1

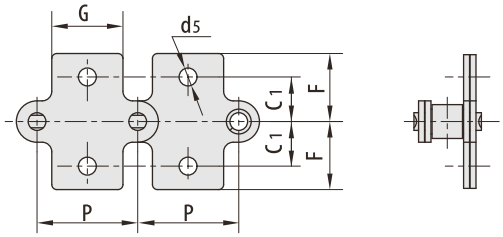

SKK1

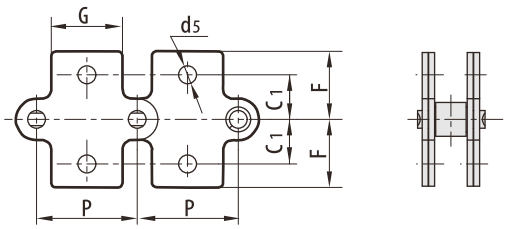

SAA2

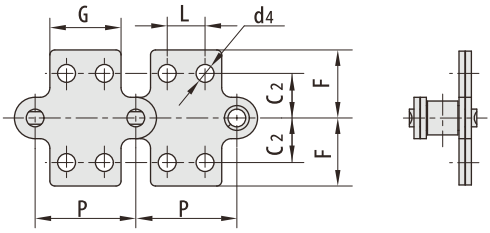

SKK2

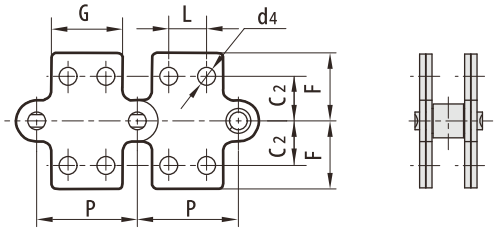

RBL ANSI chain number	P mm	G mm	L mm	C1 mm	C2 mm	F mm	d4 mm	d5 mm
C2040 C2042	25.40	19.1	9.5	11.10	13.5	20.50	3.4	5.5
C208B C208BL	25.40	23.2	12.7	11.10	13.5	20.50	4.5	5.5
C2050 C2052	31.75	23.8	11.9	14.30	15.9	25.00	5.5	6.6
C2060 C2062	38.10	28.6	14.3	17.50	19.1	32.90	5.5	9.2
C2060H C2062H	38.10	28.6	14.3	17.50	19.1	32.90	5.5	9.2
C2080 C2082	50.80	38.1	19.1	22.20	25.4	43.50	6.6	11.0
C2080H C2082H	50.80	38.1	19.1	22.20	25.4	43.50	6.6	11.0
C2040F23SAA1	25.40	19.1	-	11.15	-	19.75	-	5.4
C2060HSAA1F1	38.10	24.0	-	25.40	-	43.50	11.0	-
C2120SAA2F1	76.20	45.0	30.0	-	28.0	35.00	6.5	10.5

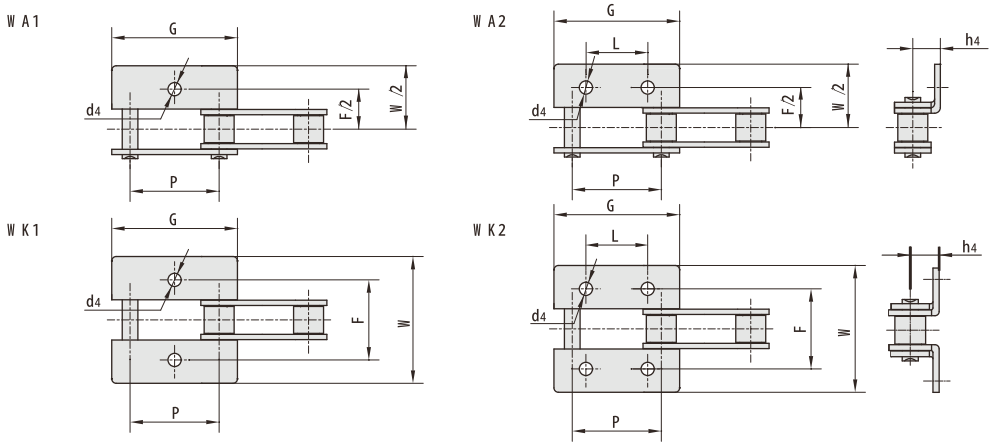

RBL chain number	P mm	G mm	L mm	F mm	W mm	h4 mm	d4 mm
C2040HW K1F2	25.40	37.00	-	62.00	110.00	10.65	7.00
C2040K1F2	25.40	37.00	-	62.00	110.00	9.10	7.00
C2042HF1	25.40	37.40	-	42.50	65.50	6.00	7.00
C208BK2F	25.40	37.20	12.70	28.00	42.00	8.50	5.50
C208BW A2F1	25.40	37.20	25.40	28.00	42.00	8.50	5.50
C2052W A1F2	31.75	46.80	-	76.20	95.20	7.50	7.10
C2052W A2F4	31.75	46.75	30.00	48.52	65.52	15.00	6.50
212BW K2F1	38.10	54.10	19.00	35.20	54.80	12.20	6.40
212BW K2F2	38.10	54.10	19.00	35.00	54.80	12.70	7.00
C2060HW K2F7	38.10	56.00	32.00	42.90	72.00	14.70	5.50
C2060W A 2	38.10	56.10	38.10	42.90	58.50	14.70	5.50
C2062HW A1F4	38.10	55.60	-	76.20	95.30	8.70	7.10
C2062HW A1F5	38.10	56.00	-	76.00	95.00	9.00	7.30
C2062HW A 2	38.10	56.10	14.30	42.90	67.80	14.70	5.50
C2062HW A2F4	38.10	55.60	38.10	76.20	95.30	8.70	7.10
C2062HW A2F7	38.10	63.50	38.10	76.20	96.00	17.50	6.35
C2062W A2F1	38.10	56.10	38.10	42.90	67.80	14.70	6.50
C2062W K2F2	38.10	56.10	38.10	43.00	68.00	14.70	7.80
216BW A2F1	50.80	71.80	25.40	58.00	80.00	17.00	8.40
C2080HW K1F1	50.80	74.80	-	55.60	87.80	19.10	10.50
C2080HW K2	50.80	74.80	50.80	55.60	87.80	19.10	6.80
C2082F12	50.80	74.80	50.80	55.60	88.00	19.10	8.40
C2082F24	50.80	74.80	56.80	55.60	87.80	19.10	6.80
C2082HF1A2	50.80	74.80	30.00	60.00	84.00	18.00	8.50
C2082HW A1F1	50.80	76.20	-	57.20	82.60	35.60	12.70
C2082W A2F4	50.80	74.80	50.80	55.60	88.00	14.00	7.00
C216ALF5	50.80	74.80	44.30	62.20	88.00	19.10	7.00
C2100HW A2	63.50	93.50	63.50	66.60	107.40	23.40	8.40
C2102HK2-M8	63.50	47.60	23.80	66.60	107.50	23.40	M 8
C220ALW A2F1	63.50	93.50	50.00	97.80	127.80	15.00	13X9
C224AHW K2	76.20	111.90	76.20	79.30	111.90	27.80	11.00

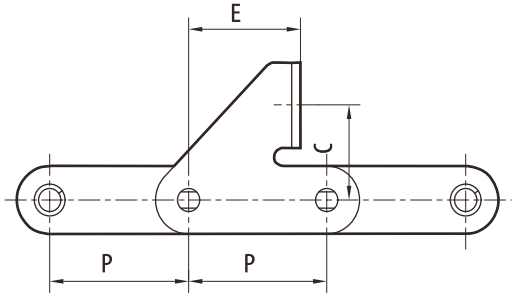

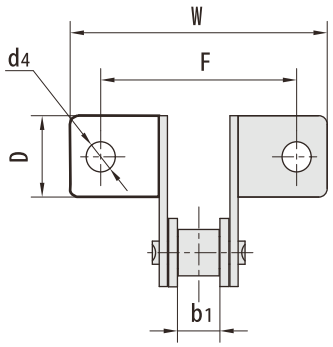

RBL chain number	P mm	b1 mm	F mm	W mm	C mm	D mm	E mm	d4 mm
C2050SD	31.75	9.40	45.0	59.0	21.2	18.0	25.7	6.6
C2062H ORSDF1	38.10	12.57	52.0	67.0	30.0	22.5	31.4	6.3

C2052A1F1

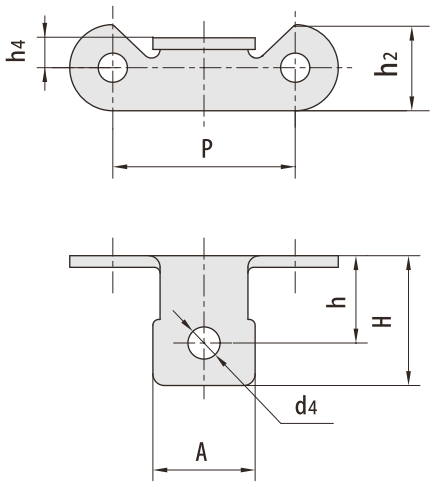

C2062HA1F4

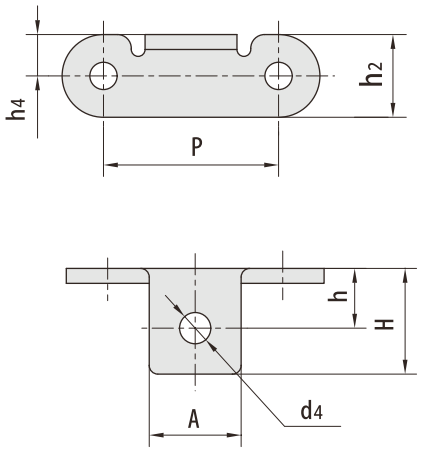

RBL chain number	P mm	A mm	h mm	H mm	h2 mm	h4 mm	d4 mm
C2052A1F1	31.75	17.8	14.7	22.6	15.0	5.2	6.5
C2062HA1F4	38.10	20.0	13.0	23.0	18.0	9.0	6.8

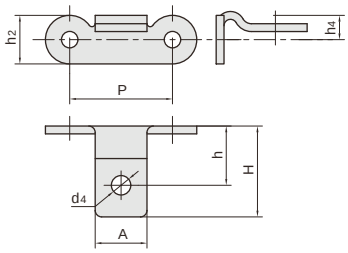

RBL chain number	P mm	A mm	h mm	H mm	h2 mm	h4 mm	d4 mm
C2052HF6	31.75	16.00	18.30	28.20	15.00	4.92	6.00

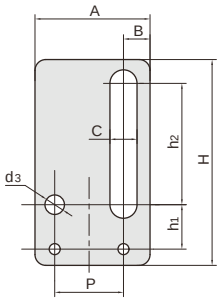

RBL chain number	P mm	h1 mm	h2 mm	H mm	A mm	B mm	C mm	d3 mm
C2050F71	31.75	20.50	56.00	95.00	53.10	12.25	12.50	9.00
C224AF13	76.20	49.00	131.40	216.00	120.00	21.90	17.00	13.00

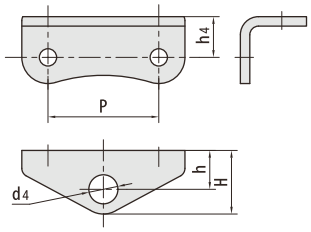

RBL chain number	P mm	h mm	h4 mm	H mm	d4 mm
2060HK1F27	38.10	13.40	14.00	21.87	8.50
2060HK1F28	38.10	13.40	14.00	21.87	10.00
*C2060K1F29	38.10	13.46	10.50	22.76	8.50

* straigth side plates

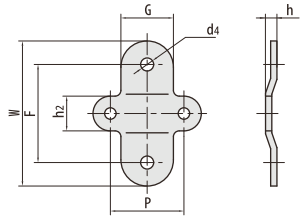

RBL chain number	P mm	h2 mm	G mm	F mm	W mm	d4 mm	h mm
C2060HF81	38.10	18.00	27.20	50.80	75.14	6.75	5.90

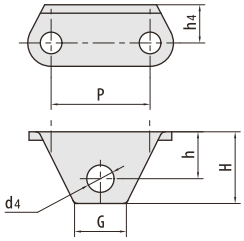

RBL chain number	P mm	G mm	h4 mm	h mm	H mm	d4 mm
C2060HK1F31	38.10	20.30	14.70	18.10	27.600	10.50
C2060K1F37	38.10	21.40	14.70	15.00	24.200	10.50

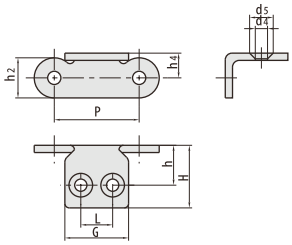

RBL chain number	P mm	h2 mm	h mm	h4 mm	H mm	L mm	G mm	d4 mm	d5 mm
C2062HA2F91	38.10	17.50	15.05	8.00	27.00	14.30	28.00	5.50	10.60
C220ALA2F7	63.50	30.00	31.00	15.00	46.00	30.40	52.00	9.00	-
C220ALA2F8	63.50	30.00	27.80	15.00	48.20	23.80	47.60	9.20	-

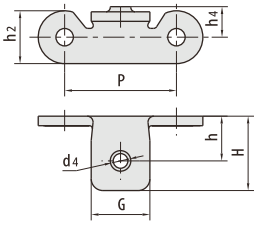

RBL chain number	P mm	h2 mm	h4 mm	h mm	H mm	G mm	d4 mm
C2062HA1F29	38.10	18.00	10.40	15.30	25.40	20.00	M 6
C2082HA1F25	50.80	24.00	11.00	22.68	35.18	25.00	M 8

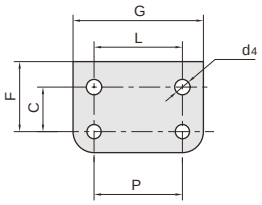

RBL chain number	P mm	L mm	G mm	C mm	F mm	d4 mm
C2050HW SA2F1	31.75	31.75	46.75	15.90	25.00	5.50

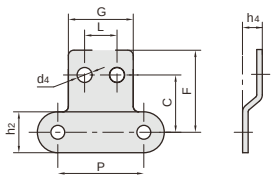

RBL chain number	P mm	h2 mm	h4 mm	L mm	G mm	C mm	F mm	d4 mm
C2050F47	31.75	15.00	7.22	11.90	23.80	21.00	30.10	5.50

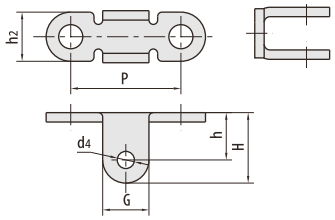

RBL chain number	P mm	G mm	h2 mm	h mm	H mm	d4 mm
C2062H F84	38.10	16.00	17.00	16.40	24.40	5.94
C2062HF112	38.10	15.20	18.00	15.93	23.53	7.15

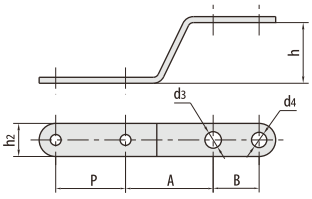

RBL chain number	P mm	h2 mm	h mm	A mm	B mm	d3 mm	d4 mm
C2062F85	38.10	18.00	33.00	47.66	25.00	9.00	8.33
C2062HF101	38.10	18.00	33.50	47.66	25.00	9.00	8.33

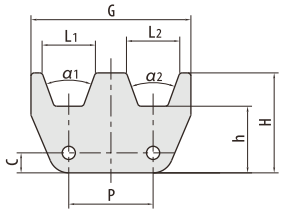

RBL chain number	P mm	G mm	L1 mm	L2 mm	C mm	h mm	H mm	a1 mm	a2 mm
C2062F102	38.10	72.00	24.00	24.00	9.00	30.00	45.00	40°	40°

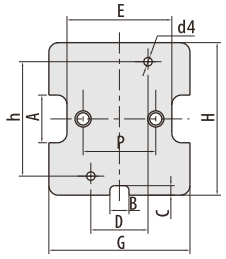

RBL chain number	P mm	G mm	h mm	H mm	A mm	B mm	C mm	D mm	E mm	d4 mm
C2062F82	38.10	74.00	60.00	80.00	25.00	10.00	5.00	30.00	55.00	M6

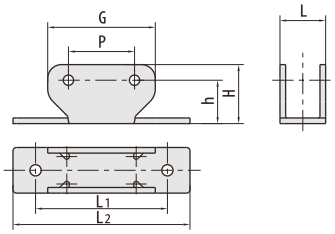

RBL chain number	P mm	G mm	h mm	H mm	L mm	L1 mm	L2 mm
C2062HU1F1	38.10	62.00	25.00	34.00	26.30	76.00	102.00

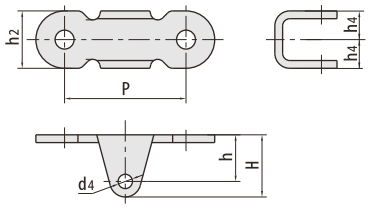

RBL chain number	P mm	h2 mm	h4 mm	h mm	H mm	d4 mm
C2082F1AA1-D3	50.80	24.00	12.00	19.50	26.00	6.00

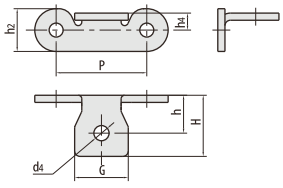

RBL chain number	P mm	G mm	h2 mm	h4 mm	h mm	H mm	d4 mm
C2082HF76	50.80	30.00	24.00	9.50	21.20	34.20	8.50

RBL chain number	P mm	h2 mm	h mm	B mm	a mm
C2162F1	101.60	47.80	120.00	30.00	21°

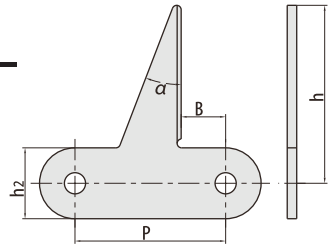

RBL chain number	P mm	H mm	d4 mm
220AHF1-1C	63.50	50.80	25.40

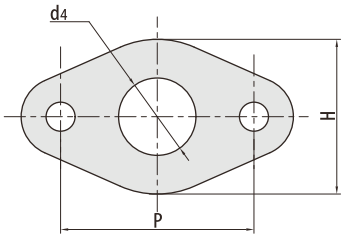

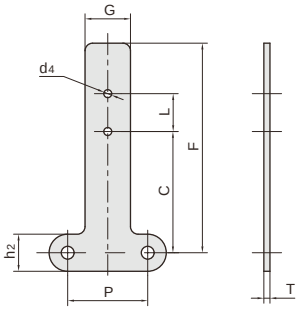

RBL chain number	P mm	h2 mm	C mm	L mm	F mm	G mm	d4 mm	T mm
C210BSA2F2	31.75	14.70	48.00	15.00	83.00	18.00	M 4	1.70
C210BSA2F4	31.75	14.70	48.00	15.00	83.00	18.00	M 4	1.42

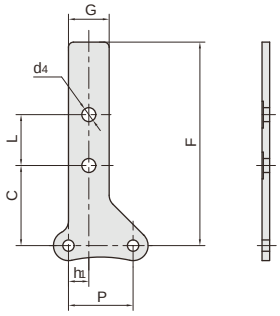

RBL chain number	P mm	h1 mm	C mm	L mm	F mm	G mm	d4 mm
208BF49	25.40	8.00	31.49	20.00	80.00	16.00	5.50

RBL chain number	P mm	G mm	G1 mm	h mm	h1 mm	a mm	y mm
208BF41	25.40	13.00	60.00	102.60	16.20	90°	96°
208BF43	25.40	14.66	60.00	94.10	16.20	90°	96°
C208BF46	25.40	11.00	59.00	111.50	16.00	91°	102°

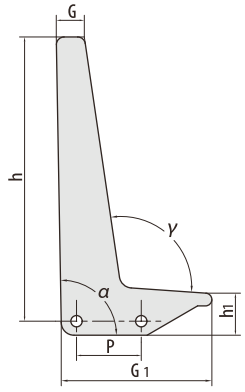

RBL chain number	P mm	G mm	h mm	H mm
208BF42	25.40	7.70	74.10	80.00

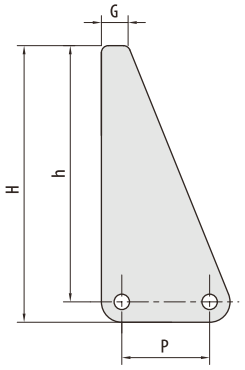

RBL chain number	P mm	G mm	h mm	h1 mm	H mm	h4 mm
210BF3	34.25	13.00	16.20	7.00	23.60	10.50

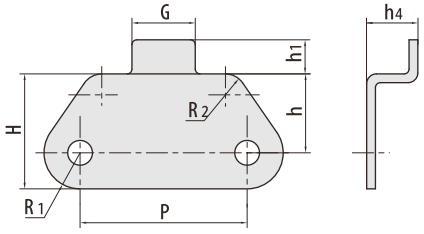

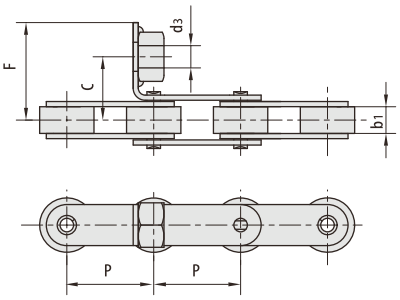

RBL chain number	P mm	b1 mm	C mm	F mm	d3 mm
C2042F4	25.40	7.85	18.50	28.50	M 8
C2062HF86	38.10	12.57	28.60	39.60	10.50
C2062HF87	38.10	12.57	30.40	41.40	10.50

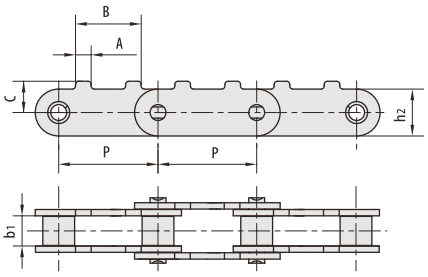

RBL chain number	P mm	b1 mm	h2 mm	A mm	B mm	C mm
C2050F9	31.75	9.4	15.0	5.0	21.0	10.0

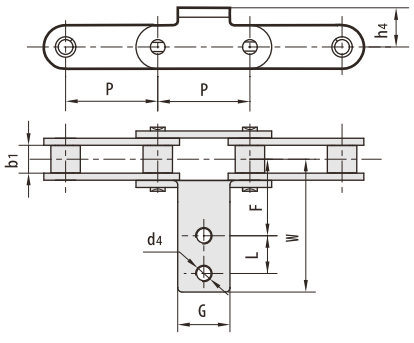

RBL chain number	P mm	b1 mm	G mm	L mm	F mm	W mm	h4 mm	d4 mm
C2050HF2	31.75	9.4	18.0	13.0	36.1	56.5	13.5	M5

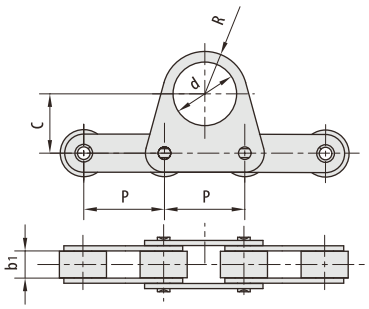

RBL chain number	P mm	b1 mm	C mm	d mm	R mm
C2062F5	38.1	12.57	28.0	30	20

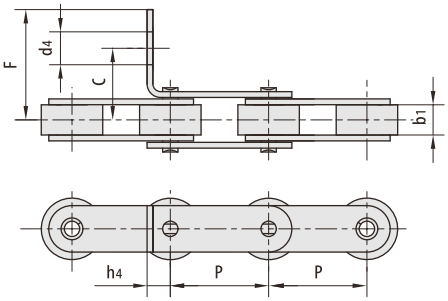

RBL chain number	P mm	b1 mm	C mm	F mm	d4 mm	h4 mm
C2042F8	25.4	7.85	17.75	28	8.5	10
C2062HF13	38.1	12.57	31.9	42.9	6	9.8
C224AF2	76.2	25.22	52.7	77.75	13	26.8

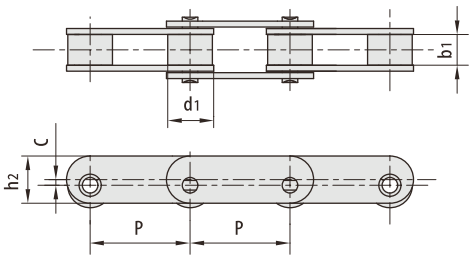

RBL chain number	P mm	b1 mm	C mm	h2 mm	d1 mm
C2062F6	38.1	12.57	3.0	23.0	22.23
C2082F8	50.8	15.75	3.5	25.0	28.58

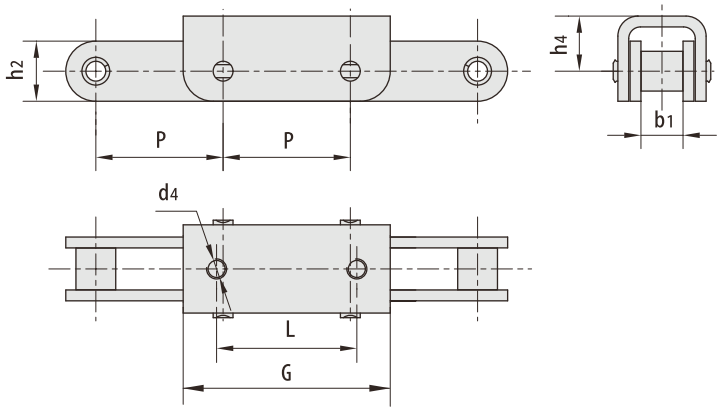

RBL chain number	P mm	b1 mm	L mm	G mm	d4 mm	h2 mm	h4 mm
C2060H-U 1F1	38.1	12.57	42.0	62.0	M 6	18.0	16.5

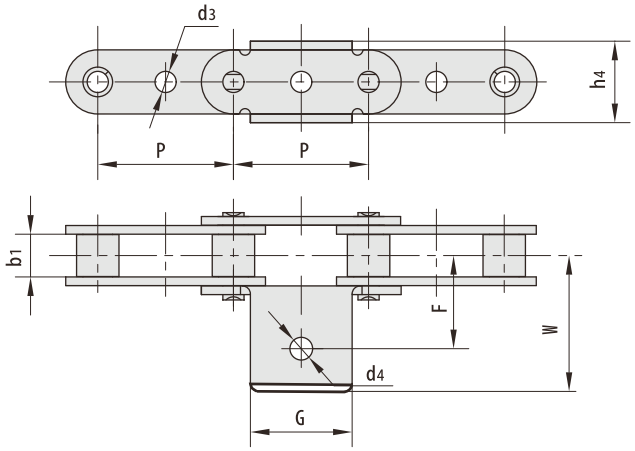

RBL chain number	P mm	b1 mm	G mm	F mm	W mm	h4 mm	d4 mm	d3 mm
C2080K1F4	50.8	15.75	38.1	40.0	56.0	30.5	8.5	-
C2080HGF1	50.8	15.75	36.0	38.0	46.0	28.4	6.0	8.1

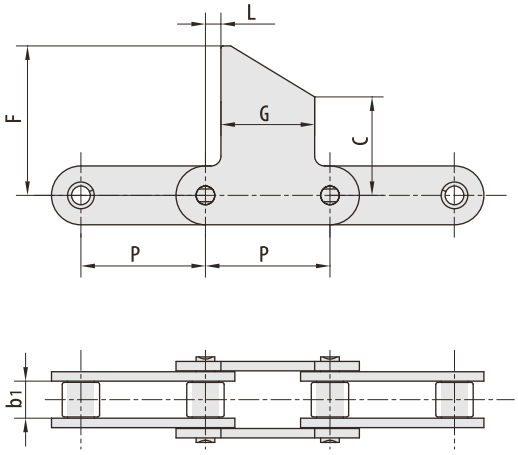

RBL chain number	P mm	b1 mm	L mm	G mm	C mm	F mm
C2060F110	38.10	12.57	5.00	30.00	15.00	30.00
C2100HF4	63.50	18.90	7.90	47.80	50.80	76.20
C2100HF5	63.50	18.90	7.90	47.80	95.30	133.40

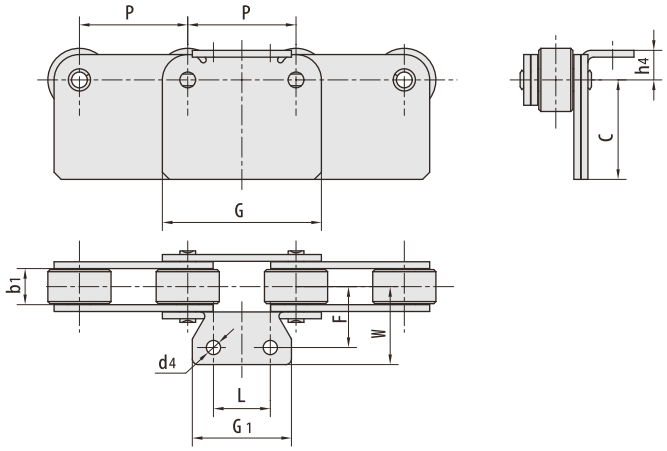

RBL chain number	P mm	b1 mm	L mm	Gi mm	G mm	h4 mm	d4 mm	c mm	F mm	W mm
C2082HW SA0F1	50.80	15.75	-	38.10	74.80	19.10	8.50	64.90	27.80	40.50
C2082HF93	50.80	15.75	-	38.10	74.80	19.10	-	64.90	-	40.50
C224ALK2F2	76.20	25.22	40.00	70.00	111.90	20.80	10.00	70.00	43.00	55.00

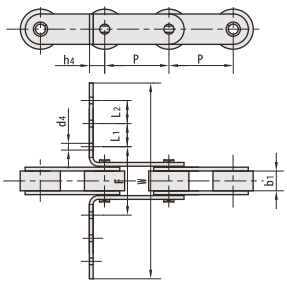

RBL chain number	P mm	b1 mm	L1 mm	L2 mm	F mm	W mm	h4 mm	d4 mm
C2080HF6	50.8	15.75	43.0	-	60.0	160.0	20.45	5.5
C2080HF11	50.8	15.75	30.0	-	110.0	210.0	19.00	8.2
C2080HF78	50.8	15.75	42.5	-	63.5	163.5	21.20	5.0
C2100HF2	63.5	18.90	52.5	52.5	70.0	300.0	30.00	5.5
C224AHF8A2	76.2	25.22	40.0	-	118.0	238.0	28.50	12.0

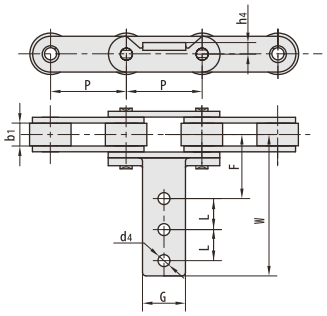

RBL chain number	P mm	b1 mm	G mm	L mm	F mm	W mm	h4 mm	d4 mm
C208HF4	50.8	15.75	28.6	50.8	57.4	181.4	8.7	11.1

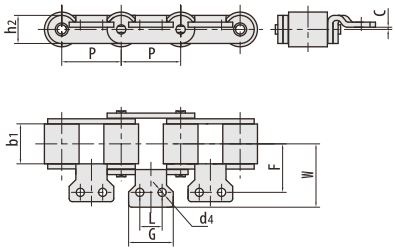

RBL chain number	P mm	b1 mm	h2 mm	G mm	L mm	F mm	W mm	d4 mm	C mm
C2050A6	31.75	9.4	15.0	16.0	-	23.4	32.8	5.5	0.50
C2052F11	31.75	9.4	15.0	16.0	-	26.6	34.6	6.2	0.50
C2062HF63A2F1	38.10	25.4	18.0	28.6	14.4	34.5	40.0	5.2	1.43
C2062HF63A2F4	38.10	25.4	18.0	28.6	14.4	69.0	87.0	5.2	1.45
C2062HF77A2	38.10	25.4	18.0	33.0	16.3	39.0	47.0	8.5	5.30

GK1

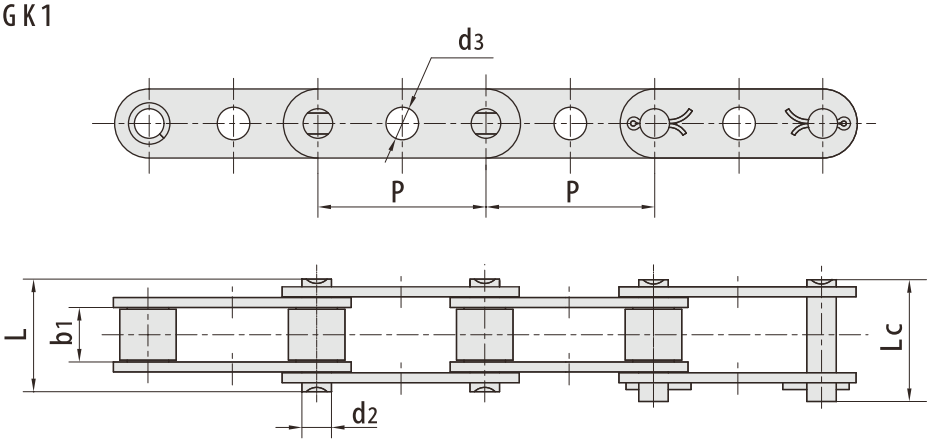

RBL ANSI chain number	P mm	b1 mm	d2 mm	d3 mm	L mm	Lc mm
C2040 C2042	25.40	7.85	3.96	4.1	16.6	18.8
C2050 C2052	31.75	9.40	5.08	5.1	20.7	23.3
C2060 C2062	38.10	12.57	5.94	6.1	25.9	28.3
C2060H C2062H	38.10	12.57	5.94	6.1	29.2	31.6
C2080 C2082	50.80	15.75	7.92	8.1	32.7	36.5
C2080H C2082H	50.80	15.75	7.92	8.1	36.2	39.4
C2100 C2102	63.50	18.90	9.53	10.1	40.4	44.7
C2100H C2102H	63.50	18.90	9.53	10.1	43.6	46.9

GK1

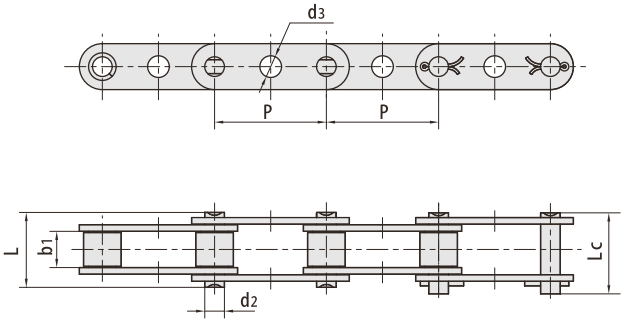

RBL ANSI chain number	P mm	b1 mm	d2 mm	d3 mm	L mm	Lc mm
C2040GKF6	25.40	7.85	3.96	6.10	16.60	18.80
C2040GKF7	25.40	7.85	3.96	6.35/7.92	17.00	18.80
C2050F73GK	31.75	9.40	5.08	6.10	21.38	23.98
C2050GKF10	31.75	9.40	5.08	5.00	20.70	23.30
C2050GKF13	31.75	9.40	5.08	5.20	20.70	23.30
C2050GKF14	31.75	9.40	5.08	6.00	20.70	23.30
C2050GKF15	31.75	9.40	5.08	6.50	20.70	23.30
C2050GKF2	31.75	9.40	5.08	8.10	20.70	22.20
C2050GKF3	31.75	9.40	5.08	8.10	20.70	22.20
C2050GKF4	31.75	9.40	5.08	7.00	20.70	22.20
C2050GKF5	31.75	9.40	5.08	7.10	20.70	22.20
C2050GKF6	31.75	9.40	5.08	6.00	20.70	22.20
C2050GKF7	31.75	9.40	5.08	6.10	20.70	22.20
C2050GKF8	31.75	9.40	5.08	8.30	20.70	22.20
C2050HGK	31.75	9.40	5.08	8.20	22.10	23.40
C2050HGKF1	31.75	9.40	5.08	7.00	22.10	23.40
C2052HGKF3	31.75	9.40	5.08	6.00	22.10	23.40
C2050HGKF4	31.75	9.40	5.08	8.10	22.10	23.40
C2050HGKF5NP	31.75	9.40	5.08	6.50	22.10	24.50
C2050HGKF17	31.75	9.40	5.08	6.10	22.10	24.50
C2060GKF1	38.10	12.57	5.94	8.00	25.90	27.70
C2060GKF2	38.10	12.57	5.94	8.10	25.90	27.70
C2060GKF3	38.10	12.57	5.94	6.20	25.90	27.70
C2060GKF8	38.10	12.57	5.94	8.80	25.90	27.70
C2060GKF18	38.10	12.57	5.94	5.50/10.00	25.90	28.30
C2060HGKF3	38.10	12.57	5.94	8.20	29.20	31.60

GK1

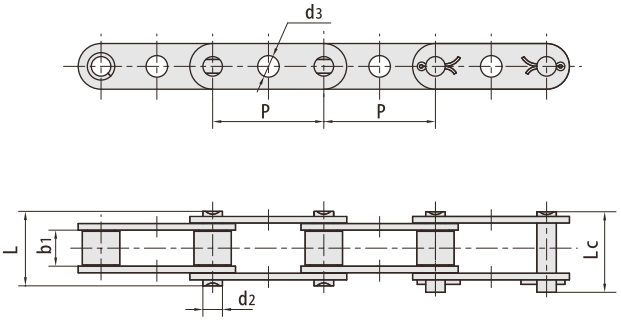

RBL ANSI chain number	P mm	b1 mm	d2 mm	d3 mm	L mm	Lc mm
C2060HGKF4	38.10	12.57	5.94	8.30	29.20	31.60
C2060HGKF5	38.10	12.57	5.94	6.00	29.20	31.60
C2060HGKF6	38.10	12.57	5.94	8.33	29.20	31.60
C2060HGKF7	38.10	12.57	5.94	10.00	29.20	31.60
C2060HGKF10	38.10	12.57	5.94	8.80	29.20	31.60
C2060HGKF22	38.10	12.57	5.94	8.20	28.70	29.30
C2060HGKF24	38.10	12.57	5.94	10.60	29.20	31.60
C2060HF9	38.10	12.57	5.94	7.95	29.20	31.60
C2060HF69GK	38.10	12.57	5.94	8.33	28.70	30.80
C2062GKF25	38.10	12.57	5.94	8.00	25.90	28.30
C2080HGKF2	50.80	15.75	7.92	7.90	36.20	39.40
C2080HGKF6	50.80	15.75	7.92	11.00	36.20	39.40
C2080HGKF12	50.80	15.75	7.92	10.97	36.20	38.90
C2082GKF14	50.80	15.75	7.92	10.97	36.20	38.90
C2082GKF15	50.80	15.75	7.92	10.95	36.20	38.90
C2082GKF16	50.80	15.75	7.92	11.00	32.70	36.50
C2082GKF17	50.80	15.75	7.92	10.30	32.70	36.50
C2100F26GK	63.50	10.40	9.53	14.60/17.50	23.90	-
C2100SLRF26GK	63.50	10.10	9.53	14.58/17.60	23.80	-
C220AGK	63.50	18.90	9.53	8.00	40.40	44.70
C208BGKF1	25.40	7.75	4.45	6.00	16.70	18.20
C208BGKF3	25.40	7.75	4.45	4.50	17.70	20.10
C208BGKF4	25.40	7.75	4.45	6.10	16.70	18.20
C208BGKF6	25.40	7.75	4.45	6.00	16.70	19.30
C208BGKF7SLR	25.40	7.75	4.45	6.00	17.70	20.10
C210BF2GK	31.75	7.00	5.08	5.97	16.50	-

D 1

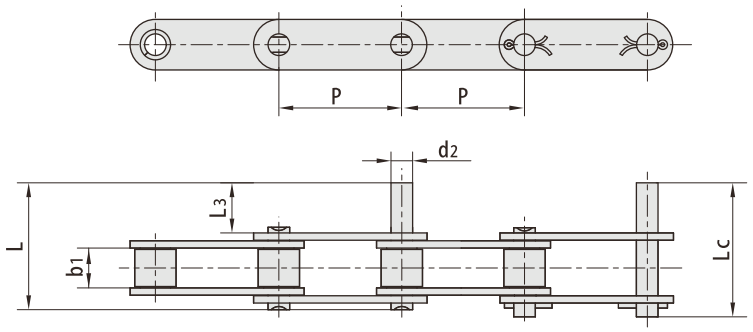

D 3

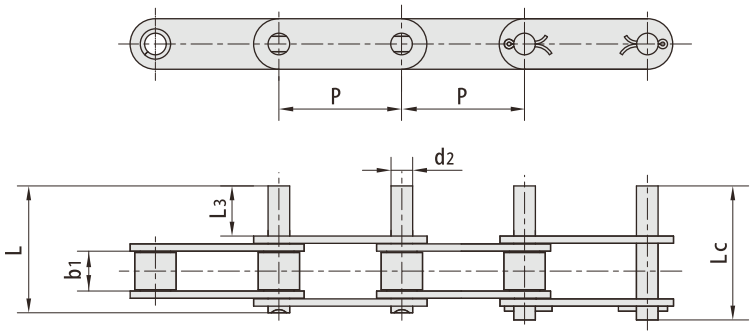

RBL ANSI chain number	P mm	b1 mm	d2 mm	L3 mm	L mm	Lc mm
C2040 C2042	25.40	7.85	3.96	9.5	25.1	26.2
C2050 C2052	31.75	9.40	5.08	11.9	31.3	33.1
C2060 C2062	38.10	12.57	5.94	14.3	38.6	40.6
C2060H C2062H	38.10	12.57	5.94	14.3	42.0	43.8
C2080 C2082	50.80	15.75	7.92	19.1	50.3	53.3
C2080H C2082H	50.80	15.75	7.92	19.1	53.5	55.0
C2100 C2102	63.50	18.90	9.53	23.8	61.8	66.1
C2100H C2102H	63.50	18.90	9.53	23.8	65.0	68.3
C2120H C2122H	76.20	25.22	11.10	28.6	79.6	83.6
C2160H C2162H	101.60	31.75	14.27	38.1	103.0	107.8

D 1

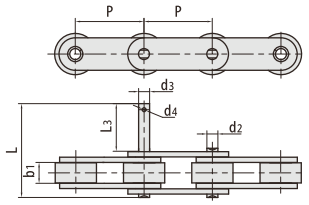

D 3

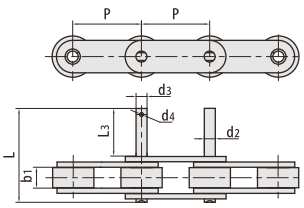

RBL ANSI chain number	P mm	b1 mm	L3 mm	L mm	d2 mm	d3 mm	d4 mm
2040-D3F12	25.400	7.85	8.00	23.70	3.96	6.00	-
208B-D3F17	25.400	7.75	19.40	35.10	4.45	4.65	1.60
C2040-D1F23	25.400	7.85	37.00	52.60	3.96	5.50	-
C2040-D3F13	25.400	7.85	31.75	47.35	3.96	7.94	-
C2040-D3F15	25.400	7.85	20.40	36.00	3.96	4.45	1.50
C2042-D1F20	25.400	7.85	35.00	51.00	3.96	6.00	-
C208B-D 3F19	25.400	7.75	15.20	31.00	4.48	8.30	-
210B-D1F3	31.750	9.65	33.00	51.40	5.08	8.00	-
C2052-D13F2	31.750	9.40	23.40	43.00	5.08	6.00	-
C2052-D1F23	31.750	9.40	40.00	59.70	5.08	6.35	-
C2052-D1F27	31.750	9.40	20.00	41.10	5.08	9.00	-
C2052-D1F28	31.750	9.40	21.00	42.10	5.08	9.30	-
C2052-D1F52	31.750	9.40	30.00	49.50	5.08	9.00	-
C2052-D1F54	31.750	9.40	22.00	41.60	5.08	5.08	1.80
C2052-D1F71	31.750	9.40	20.00	41.10	5.08	7.00	-
C2052-D1F72	31.750	9.40	50.00	71.20	5.08	8.00	-
C2052-D3F20	31.750	9.40	22.00	41.60	5.08	5.70	-
C2052F56-D1SS	31.750	9.00	25.70	49.90	5.08	5.55	-
C2060H-D1F57	38.100	12.57	35.00	52.80	5.94	10.00	-
C2060H-D3F44	38.100	12.57	25.00	55.50	5.94	M 8	-
C2060SLR-D3F55	38.100	12.57	14.30	40.50	5.94	5.94	2.00
C2062-D1F32	38.100	12.57	18.50	43.00	5.94	9.00	-
C2062-D1F40	38.100	12.57	30.00	54.60	5.94	8.00	-
C2062-D1F54	38.100	12.57	25.00	49.40	5.94	7.95	2.50
C2062-D3F31	38.100	12.57	35.00	59.50	5.94	10.00	-
C2062H-D1F47	38.100	12.57	30.00	57.80	5.94	7.95	2.50
C2062H-D1F58	38.100	12.57	29.20	57.00	5.94	9.80	-
C2062H-D1F68	38.100	12.57	26.00	53.80	5.94	5.94	2.00
C2062HF99	38.100	12.57	50.00	80.80	5.94	10.00	-
C2062HNP-D1F59	38.100	12.57	22.20	50.20	5.94	12.70	-
216B-D1F4	50.800	17.02	20.00	54.10	8.28	12.00	-
C2082-D1F21	50.800	15.75	24.50	55.60	7.92	12.00	-
C2082-D1F8	50.800	15.75	30.00	61.20	7.92	8.50	-
C2082H-D1F10	50.800	15.75	30.00	64.40	7.92	8.50	-
C2082H-D1F12	50.800	15.75	20.00	54.20	7.92	9.00	3.20
C2082H-D1F22	50.800	15.75	25.40	60.00	7.92	15.88	-
C2102H-D3F5	63.500	18.90	37.00	78.50	9.53	9.53	2.50

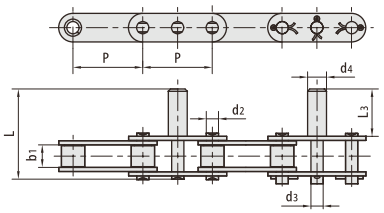

RBL ANSI chain number	P mm	b1 mm	d2 mm	d3 mm	d4 mm	L3 mm	L mm
C2052F2	31.75	9.40	5.08	6.00	7.00	20.00	39.80
C2052F14	31.75	9.40	5.08	6.00	7.00	21.00	40.40
C2050GKF12	31.75	9.40	5.08	5.08	5.08	11.90	34.00
C2050GKF13	31.75	9.40	5.08	5.20	10.00	35.00	54.60
C2052-D5F26	31.75	9.40	5.08	6.35	8.76	19.90	39.50
C2052-D5F27	31.75	9.40	5.08	6.35	7.11	19.70	39.00
C2060H-D23	38.10	12.57	5.94	8.80	12.70	41.30	69.30
C2060H-D24	38.10	12.57	5.94	7.95	12.70	44.80	65.60
C2060H-D31	38.10	12.57	5.94	7.95	16.00	45.00	73.00
C2060H-D5F4	38.10	12.57	5.94	7.95	12.70	50.00	77.80
C2060HF9	38.10	12.57	5.94	7.95	12.70	41.30	69.30
C2060HF10	38.10	12.57	5.94	7.70	14.30	41.30	69.30
C2060HF75	38.10	12.57	5.94	6.00	8.00	27.50	55.50
C2062-D38	38.10	12.57	5.94	5.94	11.10	24.20	48.60
C2062-D39	38.10	12.57	5.94	5.94	13.30	32.20	56.60
C2062H-D41	38.10	12.57	5.94	9.53	9.50	22.20	50.00
C2062HGKF17D5F1	38.10	12.57	5.94	7.95	13.30	32.20	60.20
C212AHF3	38.10	12.57	5.94	8.08	10.00	35.00	63.00
C212AHF7	38.10	12.57	5.94	5.94	12.70	41.20	69.20
C212AHF8	38.10	12.57	5.94	8.00	10.00	35.00	63.00
C212AHL-D4	38.10	12.57	5.94	5.94	8.00	25.00	53.00

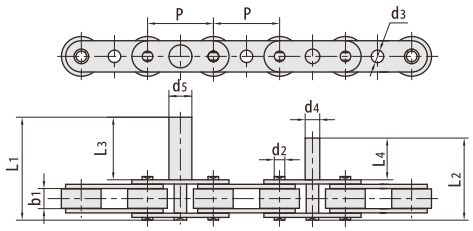

RBL ANSI chain number	P mm	b1 mm	d2 mm	d4 mm	d5 mm	L3 mm	L1 mm	L4 mm	L2 mm
C2052F1	31.75	9.4	5.08	7.0	11.0	30.0	49.8	20.0	39.8

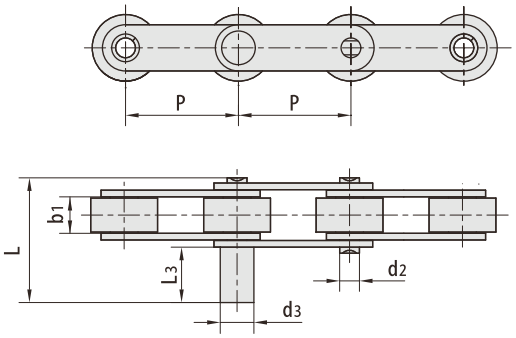

RBL ANSI chain number	P mm	b1 mm	d2 mm	d3 mm	L3 mm	L mm
C2052DF1	31.75	9.40	5.08	7.50	14.15	33.6
C210AF4	31.75	9.40	5.08	11.00	34.00	53.7
C2052-D4	31.75	9.40	5.08	6.00	32.40	52.0
C2050-D 5	31.75	9.40	5.08	8.00	40.00	59.7
C212AHL-D4	38.10	12.57	5.94	8.00	25.00	53.0
C2062-D6	38.10	12.57	5.94	12.00	25.00	49.7

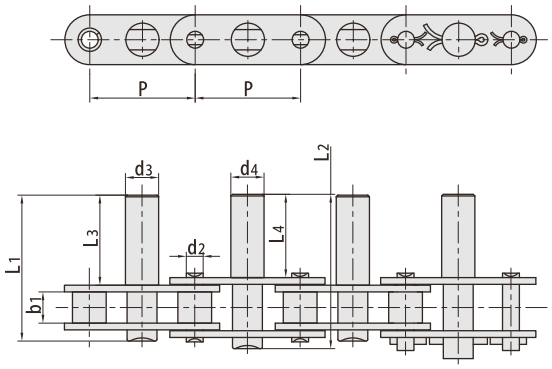

RBL ANSI chain number	P mm	b1 mm	d2 mm	d3 mm	d4 mm	L3 mm	Li mm	L4 mm	L2 mm
C2050-D5F1	31.75	9.40	5.08	10.00	10.00	43.20	60.30	41.00	62.40

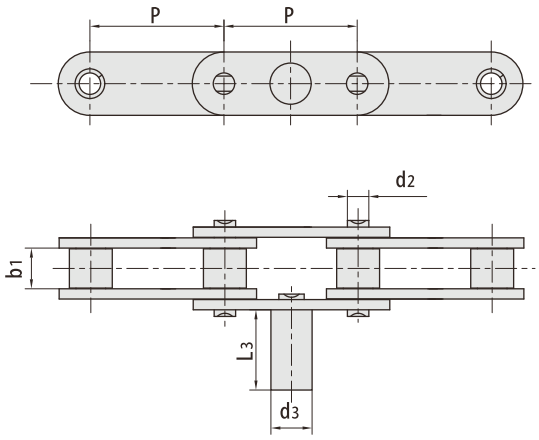

RBL ANSI chain number	P mm	b1 mm	L3 mm	dz mm	d3 mm
C2050-D 5F25	31.75	9.40	19.00	5.08	10.00
C2050F44	31.75	9.40	19.00	5.08	9.75

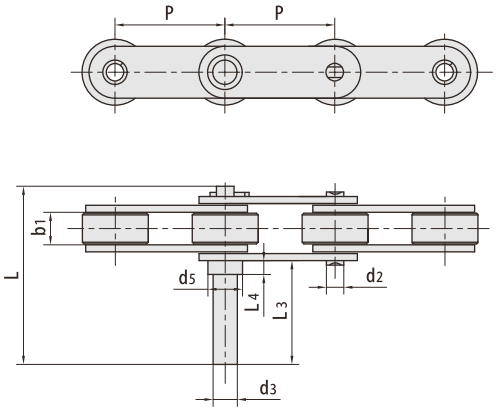

RBL ANSI chain number	P mm	b1 mm	L3 mm	L4 mm	L mm	d2 mm	d3 mm	d5 mm
C2052-D1F29	31.75	9.40	33.00	3.00	55.00	5.08	9.00	13.00
C2052-D3F24	31.75	9.40	33.00	3.00	55.00	5.08	9.00	13.00
C2052-D3F55	31.75	9.40	34.00	4.00	56.00	5.08	7.00	10.00

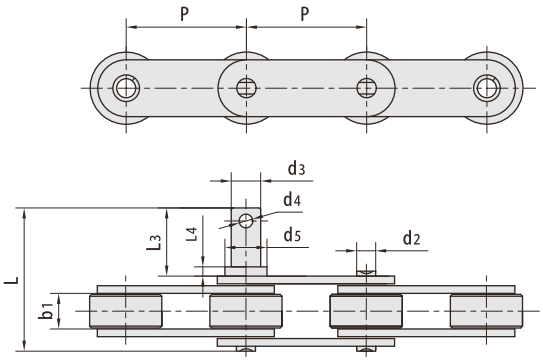

RBL ANSI chain number	P mm	b1 mm	L3 mm	L4 mm	L mm	d2 mm	d3 mm	d4 mm	d5 mm
C2052-D1F15	31.75	9.40	16.20	2.20	35.90	5.08	7.00	-	10.00
C2052-P F1-D 3F30	31.75	9.40	14.20	2.00	33.90	5.08	5.08	-	8.00
C2062-D1F43	38.10	12.57	40.60	29.10	65.00	5.94	M 5	-	5.94
C2062-D8	38.10	12.57	29.00	7.00	53.40	5.94	7.00	-	14.00
C2062H-D1F45	38.10	12.57	27.70	6.00	55.60	5.94	7.90	2.00	12.00
C2062H-D1F50	38.10	12.57	29.00	7.00	56.80	5.94	7.00	-	14.00
C2062H-D1F58	38.10	12.57	29.20	12.20	57.00	5.94	9.00	-	12.00
C2082HAA1F2-D3F2	50.80	15.75	61.50	6.00	96.50	7.92	12.00	-	15.00
C2082H-D3F19	50.80	15.75	31.00	11.00	65.50	7.92	11.90	-	15.88
C220AHSLR-D1F3	63.50	18.90	28.00	3.50	69.50	9.53	11.00	-	15.00

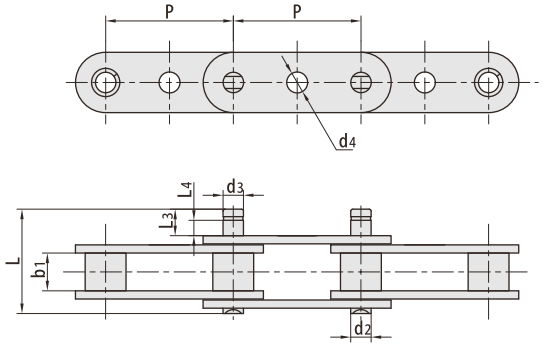

RBL ANSI chain number	P mm	b1 mm	L3 mm	L4 mm	L mm	d2 mm	d3 mm	d4 mm
C2050-D1F62	31.75	9.40	8.00	5.00	27.40	5.08	5.08	5.20
C2050-D1F63	31.75	9.40	5.00	2.00	24.40	5.08	5.08	5.20
C2050-D1F64	31.75	9.40	7.00	7.00	24.40	5.08	8.00	-
C2060SLR-D3F56	38.10	12.57	18.20	15.00	44.50	5.94	5.94	-

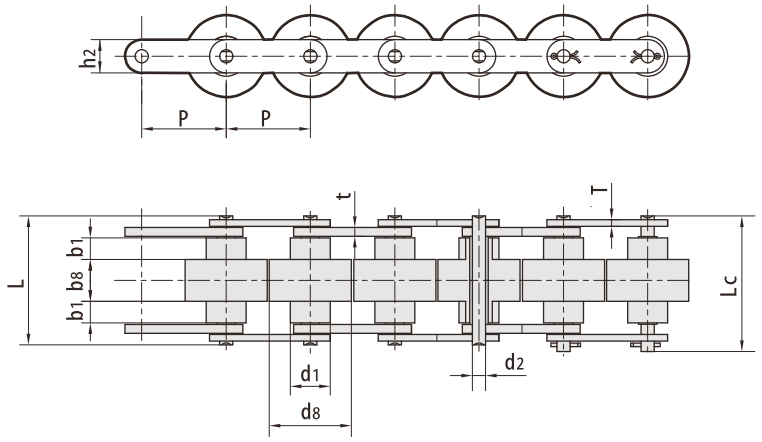

RBL chain number	Pitch	Roller diameter				Pin diameter	Pin length		Plate dimension			Weight
	P mm	d1 max mm	d8 max mm	b1 max mm	b8 max mm	d2 max mm	L max mm	Lc max mm	h2 max mm	T max mm	t max mm	q kg/n
C2030W	19.05	11.91	18.3	4.00	8.0	3.28	24.0	25.6	8.20	1.30	1.50	0.52
C2040W	25.40	15.88	24.6	5.70	10.3	3.96	31.0	32.8	11.70	1.50	1.50	0.79
C2050W	31.75	19.05	30.6	7.10	13.0	5.08	39.5	41.2	15.00	2.00	2.03	1.36
C20600	38.10	22.23	36.6	8.50	15.5	5.94	50.3	52.8	18.00	3.00	4.00	2.24
C2080W	50.80	28.58	49.0	11.00	21.5	7.92	66.2	70.0	24.00	4.00	4.80	4.06
BS30-C206B	19.05	9.00	18.3	4.50	9.1	3.28	26.3	29.6	7.28	1.30	1.50	0.50
BS30-C208A	25.40	11.91	24.6	6.10	12.5	3.96	35.6	39.5	9.60	1.50	2.00	0.83
BS30-C210A	31.75	14.80	30.6	7.50	15.0	5.08	43.0	47.1	12.20	2.00	2.40	1.27
BS30-C212A	38.10	18.00	37.0	9.75	20.0	5.94	58.1	62.7	15.00	3.00	4.00	2.14
BS30-C216A	50.80	22.23	49.0	12.00	25.2	7.92	71.9	77.3	18.60	4.00	5.00	3.55

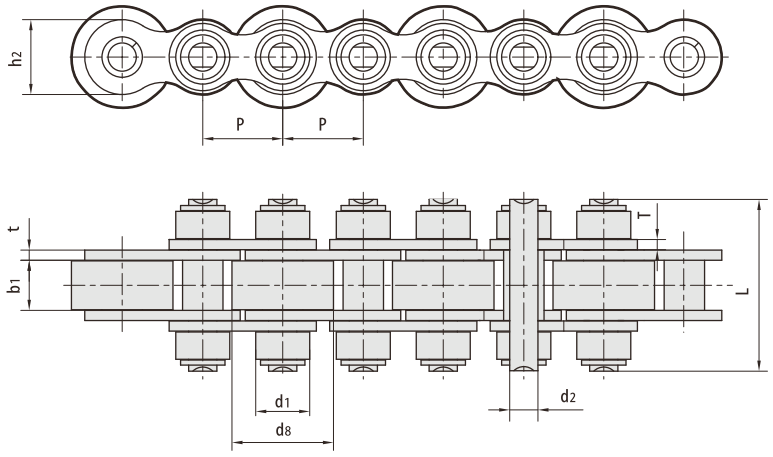

RBL chain number	Pitch	Roller diameter		Width between inner plates	Pin diameter	Pin length	Plate dimension		Tensile strength	Average Tensile strength
	P mm	d1 max mm	d8 max mm	b1 min mm	d2 max mm	L max mm	h2 max mm	t/T max mm	Q min kN/bf	Q 0 kg/n
08BS-27-P16X16	12.70	8.51	16.0	7.75	4.45	27.0	11.8	1.60/1.50	18.0/4091	19.8
08BS-33-C16	12.70	8.51	16.0	7.75	4.45	33.0	11.8	1.60/1.50	18.0/4046	19.8
08BS F8-27-C16	12.70	8.51	16.0	7.75	4.45	27.0	11.8	1.60/1.50	18.0/4046	19.8
12BS	19.05	12.07	28.0	11.68	5.72	45.0	16.0	1.85	28.9/6568	31.7
12BS-40-P28X 28	19.05	12.07	28.0	11.68	5.72	40.0	16.0	1.85	29.0/6591	31.7
12BS-43-P26X 26	19.05	12.07	26.0	11.68	5.72	43.0	16.0	1.85	29.0/6591	31.7
12BS-43-P28X 28	19.05	12.07	28.0	11.68	5.72	43.0	16.0	1.85	29.0/6591	31.7
12B S-48-P 24/C24	19.05	12.07	24.0	11.68	5.72	48.0	16.0	1.85	29.0/6591	31.7
12BS-48-P 26/C26	19.05	12.07	26.0	11.68	5.72	48.0	16.0	1.85	29.0/6591	31.7
12BS-48-P 28/C28	19.05	12.07	28.0	11.68	5.72	48.0	16.0	1.85	29.0/6591	31.7
12BS-58-P28X 28	19.05	12.70	28.0	11.68	5.72	58.0	16.0	1.85	29.0/6591	31.7
16BS-65-P38/C38	25.40	15.88	38.0	17.02	8.28	65.0	21.0	4.15/3.10	60.0/13636	72.8
100S F1-85-C45	31.75	19.05	45.0	25.50	9.53	85.0	30.0	4.00	86.7/19490	104.0
212BS-43-P48	38.10	12.07	48.0	11.68	5.72	43.0	16.0	1.85	28.9/6568	31.7

Note: P means roller made in plastic, C means roller made in steel

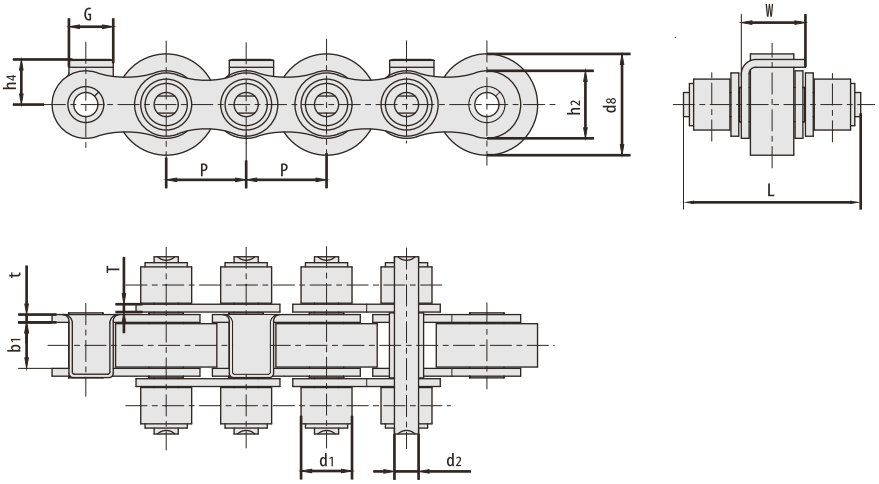

RBL chain number	Pitch	Roller diameter		With between inner plates	Pin diameter	Pin length	Plate dimension		Attachment dimension			Tensile strength
	P	d1 max	d8 max	b1 min	d2 max	L max	h2 max	T/t max	h4	G	W	Q. min
	mm	mm	mm	mm	mm	mm	mm	mm	mm	mm	mm	kN/bf
12BSF5-4O-C28	19.05	12.07	28.0	11.40	5.72	40.0	16.0	1.85	10.0	8.4	15.0	29.0/6519
12BSF5-43-C26	19.05	12.07	26.0	11.40	5.72	43.0	16.0	1.85	10.0	8.4	15.0	29.0/6519
12BSF5-43-P28X28	19.05	12.07	28.0	11.40	5.72	43.0	16.0	1.85	10.0	10.5	15.0	29.0/6519
12BSF5-48-C24	19.05	12.07	24.0	11.40	5.72	48.0	16.0	1.85	10.0	8.4	13.5	29.0/6519
12BSF8-4O-C28	19.05	12.07	28.0	11.40	5.72	40.0	16.0	1.85	10.0	8.0	15.0	29.0/6519
16BSF2-65-C38	25.40	15.88	38.5	17.02	8.28	65.0	21.0	4.15/3.10	16.5	12.0	24.0	60.0/13636

Note: P means roller made in plastic, C means roller made in steel

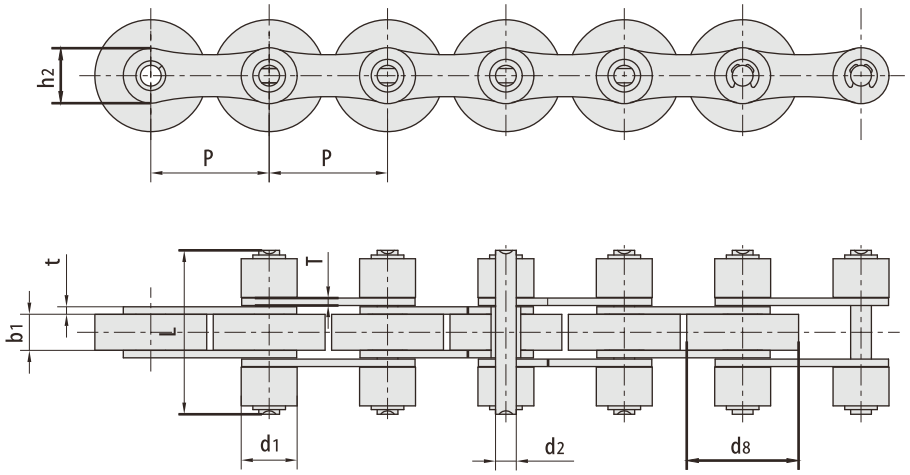

RBL chain number	Pitch	Roller diameter		Width between inner	Pin diameter	Pin length	Plate dimension		Tensile strength	Average Tensile strength
	P mm	d1 max mm	d8 max mm	b1 min mm	d2 max mm	L max mm	h2 max mm	t/T max mm	Q min kN/bf	Q 0 kN
16BS-65-C24	25.4	15.88	24.0	17.02	8.28	65.0	21.0	4.15/3.10	60.0/13636	72.8
208BS-35-C24	25.4	12.00	24.0	7.75	4.45	35.0	11.8	1.60	18.0/4091	19.8
*208BSF1-35-P24	25.4	12.00	24.0	7.75	4.45	35.0	11.8	1.60	18.0/4091	19.8
212BS-48-C28	38.1	12.07	28.0	11.68	5.72	48.0	16.0	1.85	28.9/6568	31.7
212BSF2	38.1	12.07	28.0	11.68	5.72	43.0	16.0	1.85	28.9/6568	31.7
212BSF3	38.1	12.07	28.0	11.68	5.72	48.0	16.0	1.85	28.9/6568	31.7
*212BSF4	38.1	12.07	24.0	11.68	5.72	48.0	16.0	1.85	28.9/6568	31.7
212BSF4-48-C24	38.1	12.07	24.0	11.68	5.72	48.0	16.0	2.03	32.0/7194	35.2
212BSF5-43-C28	38.1	12.07	28.0	11.68	5.72	43.0	16.0	1.85	28.9/6568	31.7
*216BS-65-P50	50.8	15.88	50.0	17.02	8.28	65.0	21.0	4.15/3.10	60.0/13636	72.8
216BS-65-C38.5	50.8	15.88	38.5	17.02	8.28	65.0	21.0	4.15/3.10	60.0/13636	72.8
216BS-65-C40	50.8	15.88	40.0	17.02	8.28	65.0	21.0	4.15/3.10	60.0/13636	72.8
63PS	63.0	40.00	50.0	24.50	14.00	91.5	35.0	5.10	90.0/20232	135.0
63PSF1	63.0	38.00	46.0	21.60	12.00	84.0	30.0	4.00	66.6/15000	85.0

Note: * means roller made in plastic

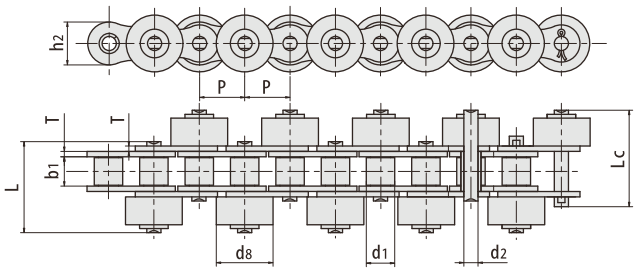

RBL chain number	Pitch	Roller diameter		Width between inner plates	Pin diameter	Pin length		Plate dimension		Tensile strength	Average Tensile strength	Weight
	P mm	d1 min mm	d8 min mm	b1 min mm	d2 max mm	L max mm	Lc max mm	h2 max mm	T max mm	Q min kN/bf	Q 0 kN	q kg/n
40-PSR	12.700	7.95	15.88	7.85	3.96	25.8	27.0	12.0	1.50	13.8/3102	17.50	1.60
*405	12.700	7.95	15.88	7.85	3.96	25.8	27.0	12.0	1.50	13.8/3102	17.50	0.90
40S-C	12.700	7.95	15.88	7.85	3.96	25.8	27.0	12.0	1.50	15.2/3417	18.20	1.65
50-S R-C	15.875	10.16	19.05	9.40	5.08	31.8	34.0	15.1	2.03	21.8/4900	29.40	2.40
*60S	19.050	11.91	22.23	12.57	5.94	40.0	42.5	18.0	2.42	31.8/7227	38.10	1.90
60S-C	19.050	11.91	22.23	12.57	5.94	40.0	42.5	18.0	2.42	31.8/7149	38.10	3.63
*80S	25.400	15.88	28.58	15.75	7.92	51.3	54.3	24.0	3.25	56.7/12886	69.40	3.60
80S-C	25.400	15.88	28.58	15.75	7.92	51.3	54.3	24.0	3.25	56.7/12886	69.40	5.80

Note: * means roller made in plastic

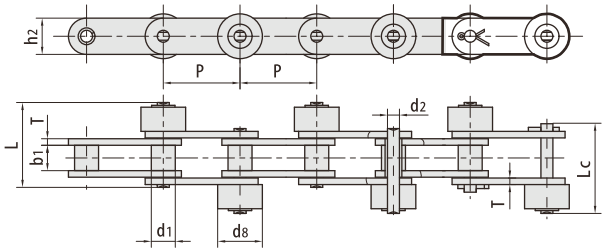

RBL chain number	Pitch	Roller diameter		Width between inner plates	Pin diameter	Pin length		Plate dimension		Tensile strength	Average Tensile strength	Weight
	P mm	d1 min mm	d8 min mm	b1 min mm	d2 max mm	L max mm	Lc max mm	h2 max mm	T max mm	Q min kN/bf	Q 0 kN	q kg/n
C204052-PSR	25.40	7.95	15.88	7.85	3.96	25.8	27.0	12.0	1.50	13.8/3137	15.2	0.99
C2050S	31.75	10.16	19.05	9.40	5.08	31.8	34.0	15.0	2.03	21.8/4955	23.9	1.52
C20525 F1	31.75	19.05	27.00	9.40	5.08	35.0	37.3	15.0	2.03	21.8/4955	23.9	3.06
24BSF1	38.10	25.40	44.15	25.40	14.63	82.0	86.5	33.2	6.0/4.8	160.0/35968	176.0	15.33
*C2060HS	38.10	11.91	22.23	12.57	5.94	44.0	46.6	18.0	3.25	31.1/7069	34.3	1.78
C20605F7	38.10	11.91	22.23	12.57	5.94	45.5	48.0	18.0	2.42	31.1/6991	34.3	2.92
K2062HSF6	38.10	22.23	30.00	12.57	5.94	45.0	47.8	18.0	3.25	31.1/6991	34.3	2.68
C2082HSF2	50.80	28.58	40.00	15.75	7.92	54.6	57.8	24.0	4.00	55.6/12500	69.4	6.64
*C2100HS-P	63.50	19.05	39.69	18.90	9.53	65.3	68.6	30.0	4.80	86.7/19490	109.2	4.44

Note: * means roller made in plastic

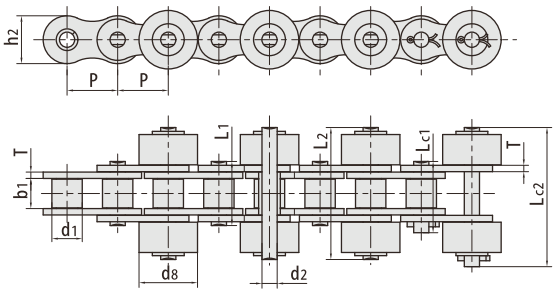

RBL chain number	Pitch	Roller diameter		Width between inner plates	Pin diameter	Pin length				Plate dimension		Average Tensile strength	Weight
	P mm	d1 min mm	d8 min mm	b1 min mm	d2 max mm	L max mm	Lc max mm	Lc1 max mm	Lc2 max mm	h2 max mm	T max mm	Q 0 kN	q kg/n
*08BSR2F1-P	12.700	8.51	15.88	7.75	4.45	16.7	34.7	19.3	36.5	11.80	1.60	18.0/4046	0.96
4052-5R	12.700	7.95	15.88	7.85	3.96	16.6	35.3	18.8	37.2	12.00	1.50	14.1/3169	1.64
50SF1-C	15.875	10.16	19.05	9.40	5.08	20.7	42.8	23.3	45.0	15.09	2.03	21.8/4900	2.41
*505 F1-P	15.875	10.16	19.05	9.40	5.08	20.7	42.8	23.3	45.0	15.09	2.03	21.8/4901	1.17
60S2-C	19.050	11.91	22.23	12.57	5.94	25.9	54.0	28.3	56.6	18.00	2.42	31.8/7149	3.62
100S2	31.750	9.53	36.70	18.90	9.53	40.4	83.0	44.7	87.0	30.00	4.00	86.7/49490	9.09
100S2F1	31.750	19.05	39.40	18.90	9.53	40.4	83.0	44.7	86.9	30.00	4.00	86.7/21224	8.55

Note: * means roller made in plastic

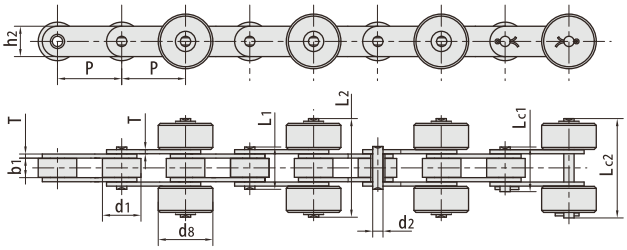

RBL chain number	Pitch	Roller diameter		Width between inner plates	Pin diameter	Pin length				Plate dimension		Average Tensile strength	Weight
	P mm	d1 min mm	d8 min mm	b1 min mm	d2 max mm	L max mm	Lc max mm	Lc1 max mm	Lc2 max mm	h2 max mm	T max mm	Q 0 kN	q kg/n
C205052	31.75	10.16	19.05	9.40	5.08	-	42.8	-	45.0	15.0	2.03	21.8/4899	2.20
*C20525 F2-P 25.4	31.75	19.05	25.40	9.40	5.08	20.7	49.2	23.3	51.1	15.0	2.03	21.8/4900	1.23
C2060HS-C	38.10	11.91	30.00	12.57	5.94	29.2	57.6	31.6	59.2	18.0	3.25	31.8/7149	3.42
C2062HS-C	38.10	22.23	30.00	12.57	5.94	-	57.6	-	59.2	18.0	3.25	31.8/7149	5.97
C2062-5 R2F1	38.10	22.23	30.00	12.57	5.94	25.9	53.7	28.3	55.6	18.0	2.42	31.1/6991	2.95
K2062SR2F1-PA6	38.10	22.23	30.50	12.57	5.94	25.9	56.0	28.3	58.5	18.0	2.42	31.1/6991	2.35

Note: * means roller made in plastic

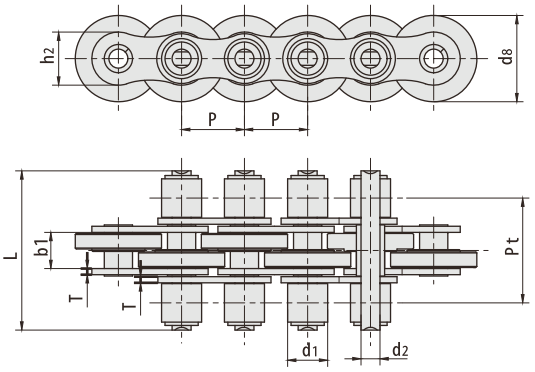

RBL chain number	Pitch	Roller diameter		Width between inner plates	Pin diameter	Pin length	Plate dimension		Transverse pitch	Tensile strength	Average Tensile strength
	P mm	d1 min mm	d8 min mm	b1 min mm	d2 max mm	L max mm	h2 max mm	T max mm	P t mm	Q min kN/bf	Q 0 kN
12BS3-40-C27/P27	19.05	12.07	27.0	11.68	5.72	40.0	16.0	1.85	27.0	29.0/6519	34.8
12BS3F1-48-C26	19.05	12.07	26.0	11.40	5.72	48.0	16.0	1.85	31.7	29.0/6519	34.8

Note: P means roller made in plastic, C means roller made in steel

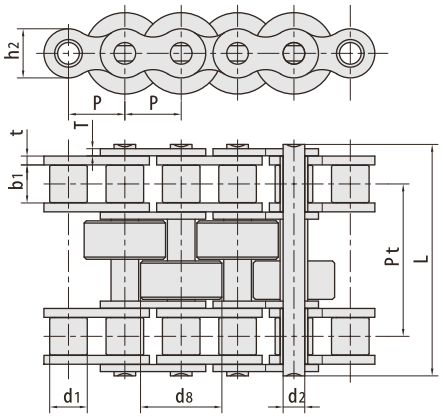

RBL chain number	Pitch	Roller diameter		Width between inner plates	Pin diameter	Pin length	Plate dimension		Transverse pitch	Tensile strength	Average Tensile strength
	P mm	d1 min mm	d8 min mm	b1 min mm	d2 max mm	L max mm	h2 max mm	T max mm	P t mm	Q min kN/bf	Q 0 kN
24BF28-PA6	38.100	25.40	55.00	25.40	14.63	156.80	33.20	6/4.8	103.0	280.0/62944	308.0
24BSF2-2	38.100	25.40	55.00	25.40	14.63	156.80	33.20	6/4.8	102.8	280.0/62944	308.0

Note: P means roller made in plastic, C means roller made in steel

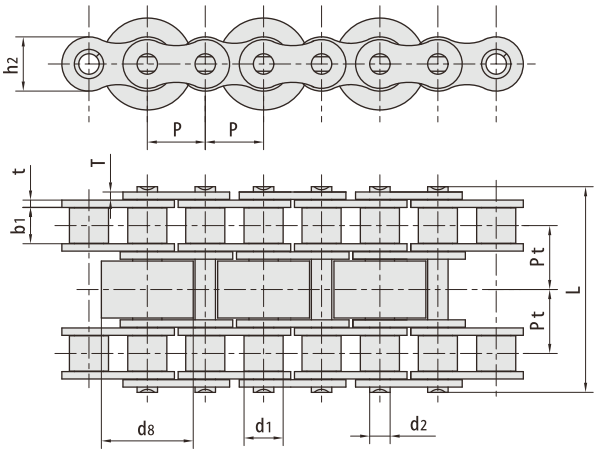

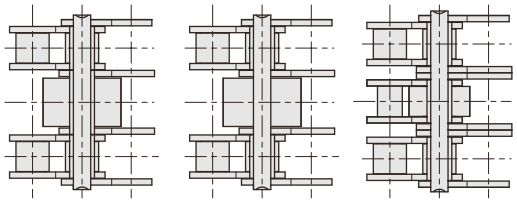

A 型
Type A

B 型
Type B

C 型
Type C

RBL chain number	Pitch	Roller diameter		Width between inner plates	Pin diameter	Pin length	Plate dimension		Transverse pitch	Tensile strength	Average Tensile strength	Type
	P mm	d1 min mm	d8 min mm	b1 min mm	d2 max mm	L max mm	h2 max mm	T/t max mm	P t mm	Q min kN/bf	Q 0 kN	
06B F52-C14.5/P14.5	9.525	6.35	14.50	5.72	3.28	33.5	8.2	1.30	10.24	14.0/3147	16.1	B
06BS-3-C15/P15	9.525	6.35	15.00	5.72	3.28	33.5	8.2	1.30	10.24	16.9/3841	18.7	B
A06B F3S-3-C15/P15	9.525	6.35	15.00	5.72	3.28	33.5	8.4	1.30	10.24	16.9/3841	18.7	B
08BS-3-45-C16	12.700	8.51	16.00	7.75	4.45	45.1	11.8	1.60	13.92	32.0/7273	38.7	A
08BS-3-45-C17	12.700	8.51	17.00	7.75	4.45	45.1	11.8	1.60	13.92	32.0/7273	38.7	A
08BS-3-45-C20	12.700	8.51	20.00	7.75	4.45	45.1	11.8	1.60	13.92	32.0/7273	38.7	A
08BSF1-3-45-C17	12.700	8.51	17.00	7.75	4.45	45.5	11.8	1.60	14.23	32.0/7273	38.7	A
08BSF6-3-45-C20	12.700	8.51	20.00	7.75	4.45	45.1	11.8	1.60	13.92	32.0/7273	38.7	B
12AF107-3-71-C28	19.050	11.91	28.58	12.57	5.94	71.5	18.0	2.42	22.78	62.6/14072	72.0	C
12AF122—2	19.050	11.91	28.00	12.57	5.94	65.3	18.0	2.42	19.60	62.3/14005	71.6	B
12AF127-3-P29	19.050	11.91	29.00	12.70	5.94	71.5	18.0	2.42	22.80	62.6/14072	72.0	B
12AF90-3-71-C28	19.050	11.91	28.58	12.57	5.94	71.5	18.0	2.42	22.78	62.6/14072	72.0	B
12AS F1-3-62-C26	19.050	11.91	25.90	12.57	5.94	62.0	18.0	2.42	17.87	62.6/14072	72.0	A
12AS F2-3-81-P28.4	19.050	11.91	28.40	12.57	5.94	81.0	18.0	2.42	27.42	62.6/14072	72.0	B
12BF45-3-C28/P28	19.050	12.07	28.00	11.68	5.72	61.5	16.0	1.85	19.46	57.8/12993	66.5	B
12BS-3-62-C24	19.050	12.07	24.00	11.68	5.72	61.5	16.0	1.85	19.46	57.8/12993	66.5	A
12BS-3-62-C26	19.050	12.07	26.00	11.68	5.72	61.5	16.0	1.85	19.46	57.8/12993	66.5	A
12BS-3-62-C28/P28	19.050	12.07	28.00	11.68	5.72	61.5	16.0	1.85	19.46	57.8/12993	66.5	A
12BS-3-62-C31	19.050	12.07	31.00	11.68	5.72	61.5	16.0	1.85	19.46	57.8/12993	66.5	B
12BSF10-3-62-C26	19.050	12.07	26.00	11.68	5.72	61.5	16.0	1.85	19.46	86.7/19705	101.8	C
12BSF10-3-62-C28	19.050	12.07	28.00	11.68	5.72	61.5	16.0	1.85	19.46	86.7/19705	101.8	C
16SB-3-100-C38	25.400	15.88	38.50	17.02	8.28	99.8	21.0	4.153.1	31.88	160.0/35968	184.0	C
C212BS F1-3-62-C32	38.100	12.07	32.00	11.68	5.72	61.5	16.0	1.85	19.46	57.8/12993	66.5	B
C2082HF80-2-PA6	50.800	28.58	45.00	15.75	7.92	108.0	24.0	4.00	35.65	94.0/21131	108.1	C

Note: P means roller made in plastic, C means roller made in steel

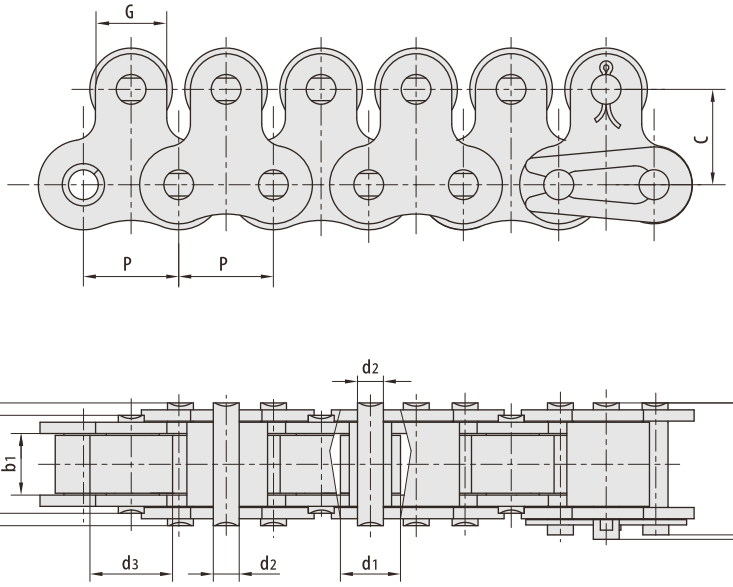

RBL chain number	Pitch	Roller diameter		Width between inner plates	Pin diameter	Pin length				Attachment dimension		Average Tensile strength	Weight
	P mm	d1 min mm	d3 min mm	b1 min mm	d2 max mm	L1 max mm	L2 max mm	L3 max mm	L4 max mm	G mm	C mm	Q kN	q kg/n
40-1-1LTR	12.700	7.95	11.00	7.85	3.96	13.50	16.60	17.80	18.80	9.5	12.7	14.1/3250	1.44
50-1-1LTR	15.875	10.16	15.00	9.40	5.08	16.50	20.70	22.20	23.30	12.7	15.9	22.2/4991	2.30
50-1LTRF1	15.875	19.05	19.05	9.40	5.08	16.50	20.70	22.20	-	12.7	15.9	22.2/4991	1.96
50-1LTRF2	15.875	10.16	18.00	9.40	5.08	16.50	20.70	22.20	-	12.7	15.9	22.2/4991	1.90
50-1LTRF4	15.875	10.16	19.00	9.40	5.08	-	20.70	22.20	23.30	12.7	15.9	22.2/4991	2.28
60-1-1LTR	19.050	11.91	18.00	12.57	5.94	21.00	25.90	27.70	28.30	15.9	18.3	31.8/7227	3.40
80-1-1LTR	25.400	15.88	24.00	15.75	7.92	26.20	32.70	35.00	36.50	19.1	24.6	56.7/12746	5.90
80-1LTRF1	25.400	15.88	25.58	15.75	7.92	26.20	32.70	-	36.50	19.1	24.6	56.7/12746	4.42
100-1-1LTR	31.750	19.05	30.00	18.90	9.53	32.30	40.40	44.70	44.70	25.4	31.8	88.5/20114	8.90

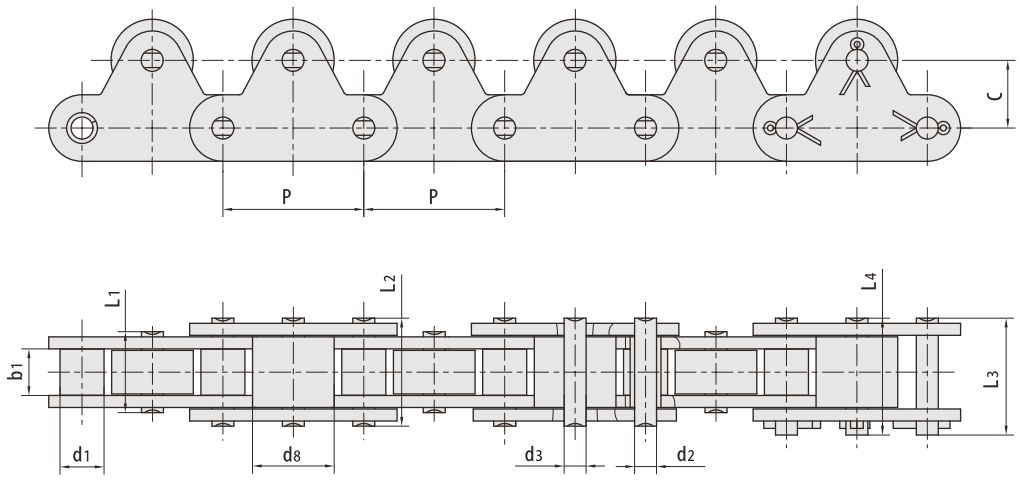

RBL chain number	Pitch	Roller diameter		Width between inner plates	Pin diameter	Pin length				Attachment dimension		Average Tensile strength	Weight
	P mm	d1 min mm	d8 min mm	b1 min mm	d2 max mm	L1 max mm	L2 max mm	L3 max mm	L4 max mm	G mm	d3 mm	Q kN	q kg/n
C2040-1LTR	25.40	7.95	15.88	7.85	3.96	13.50	16.6	17.8	18.8	12.7	3.96	14.1/3205	1.31
C2040-1LTRF2	25.40	7.95	15.88	7.85	3.96	13.50	16.6	17.8	18.8	15.0	3.96	14.1/3205	1.24
C2040-1LTRF3	25.40	7.95	15.88	7.85	3.96	13.50	16.6	17.8	18.8	15.0	3.96	10.0/2248	1.12
C2050-1LTR	31.75	10.16	19.05	9.40	5.08	16.50	20.7	22.2	23.3	15.9	5.08	22.2/5045	2.03
C2050-1LTRF3	31.75	10.16	19.05	9.40	5.08	16.50	20.7	22.2	23.3	19.0	5.08	22.2/5045	1.91
C2060-1LTR	38.10	11.91	22.23	12.57	5.94	20.70	25.9	27.5	27.5	23.0	5.94	31.8/7227	2.89
C2060-1LTRF6	38.10	11.91	22.23	15.57	5.94	21.00	25.9	27.7	28.3	23.0	5.94	31.8/7227	2.80
C2060H-1LTRF7	38.10	5.94	28.00	12.57	5.94	22.40	29.2	31.6	-	18.3	5.94	31.1/6991	1.61
C2080-1LTR	50.80	15.88	28.58	15.75	7.92	26.20	32.7	35.0	36.5	29.0	11.50	56.7/12886	4.54
C2080H-1LTR	50.80	15.88	28.55	15.75	7.92	29.28	36.2	38.9	41.6	29.0	11.10	55.6/12499	5.50
C2100-1LTR	63.50	19.05	39.67	18.90	9.53	32.30	40.4	44.7	44.7	35.4	14.50	88.5/20114	7.72
C2100-1LTRF2	63.50	19.05	39.67	18.90	9.53	32.30	40.4	44.7	44.7	31.8	9.53	88.5/20114	7.42

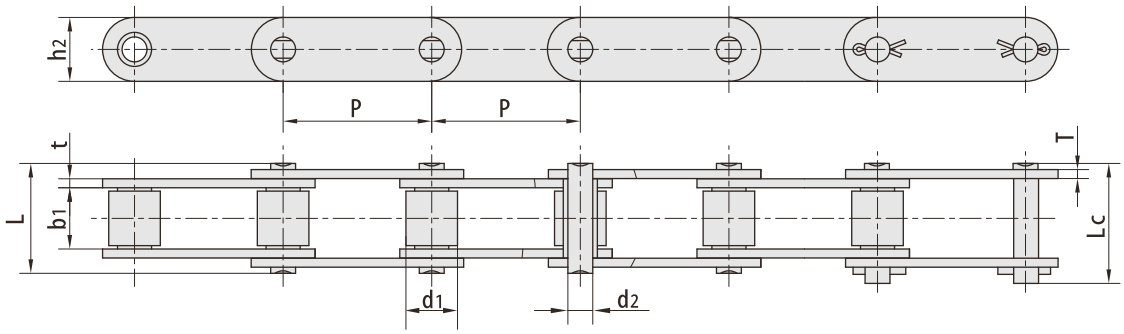

RBL chain number	Pitch	Roller diameter	Width between inner plates	Pin diameter	Pin length		Inner plate depth	Plate thickness	Tensile strength		Average Tensile strength		Weight
	P	d1 max	b1 min	d2 max	L max	Lc max	h2 max	t/T max	q		Qo		q
	mm	mm	mm	mm	mm	mm	mm	mm	KN	LB	kN	LB	kg/m
81X	66.27	23.00	27.00	11.10	49.0	53.5	28.50	4.00	127.6	29000	134.0	30450	3.78
81XH	66.27	23.00	27.78	11.10	60.7	65.1	31.35	7.94/5.55	184.8	42000	194.0	44100	5.88
81XHH	66.27	23.00	27.78	11.10	65.6	70.0	31.35	7.94	211.2	48000	214.5	49440	6.70
Stainless steel (type 304)													
81X-SS	66.27	23.00	27.00	11.10	49.0	53.5	28.50	4.00	73.8	16780	77.5	17620	3.83
81XH-SS	66.27	23.00	27.78	11.10	60.7	65.1	31.35	7.94/5.55	89.4	21340	98.6	22400	5.95

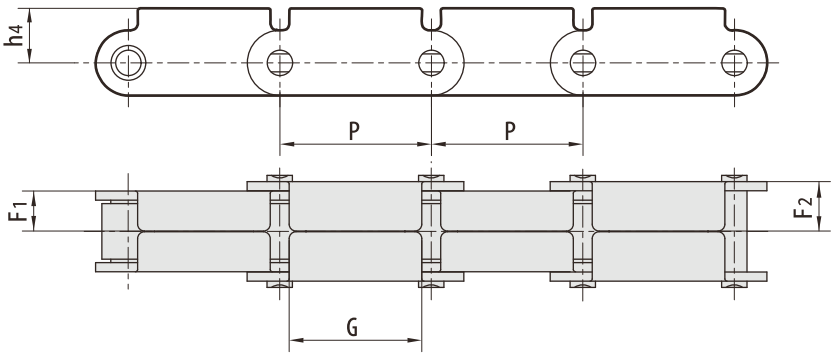

RBL chain number	p	F1	F2	G	h4
	mm	mm	mm	mm	mm
81x RT	66.27	17.50	21.80	58.00	23.85

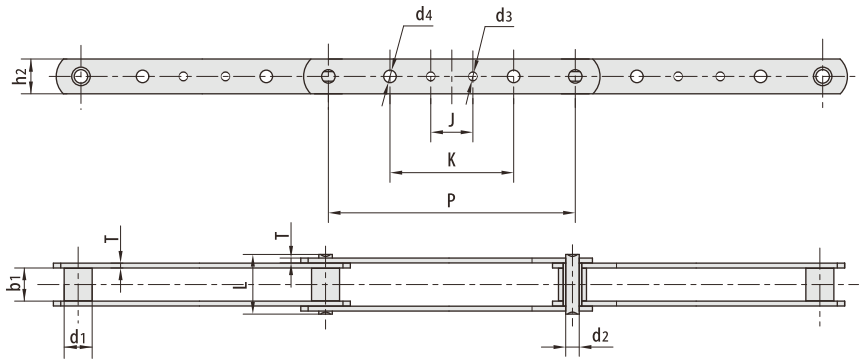

RBL chain number	Pitch	Roller diameter	Width between inner plates	Pin dimension		Plate dimension					Plate thickness	Tensile strength	Average Tensile strength	Weight
	P mm	d1 max mm	b1 min mm	d2 max mm	L max mm	h2 max mm	d3 max mm	d4 max mm	J max mm	K max mm	T max mm	q kN/LBF	Qo kN	q kg/m
3939-B4	203.2	23.0	27.0	11.1	49.0	28.58	7.2	7.2	38.1	101.6	4.0	115.58/26268	136.5	2.45
3939-B21	203.2	23.0	27.0	11.1	49.0	28.58	7.2	-	38.1	-	4.0	115.58/26268	136.5	2.45
3939-B23	203.2	23.0	27.0	11.1	49.0	28.58	-	10.3	-	92.1	4.0	115.58/26268	136.5	2.45
3939-B24	203.2	23.0	27.0	11.1	49.0	28.58	-	7.2	-	101.6	4.0	115.58/26268	136.5	2.48
3939-B40	203.2	23.0	27.0	11.1	49.0	28.58	-	10.3	-	101.6	4.0	115.58/26268	136.5	2.45
3939-B43	203.2	23.0	27.0	11.1	49.0	28.58	7.2	10.3	38.1	92.1	4.0	115.58/26268	136.5	2.42
3939-B44	203.2	23.0	27.0	11.1	49.0	28.58	7.2	10.3	38.1	101.6	4.0	115.58/26268	136.5	2.45
3939H-B4	203.2	23.0	27.0	11.1	58.0	28.60	-	7.2	38.0	102.0	6.4	150.00/34082	172.5	3.51

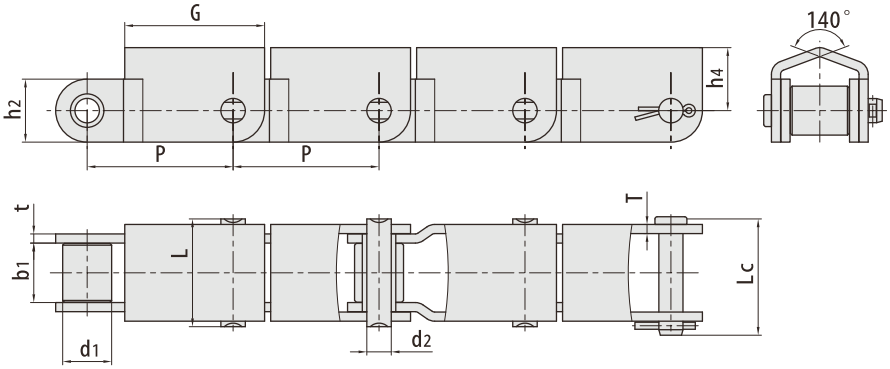

RBL chain number	Pitch	Roller diameter	Width between inner plates	Pin diameter	Pin length		Plate dimension				Tensile strength	Weight
	P mm	d1 max mm	b1 min mm	d2 max mm	L max mm	Lc max mm	h2 max mm	t/T max mm	G mm	h4 mm	q kN/LBF	q kg/m
P66.27F6	66.27	22.23	27.00	11.10	49.00	53.80	28.60	4.15	63.50	28.60	97.8/21985	5.25

RBL chain number	p mm	h mm	H mm	B mm	L mm
08B-940	12.70	9.60	17.50	1.50	17.90

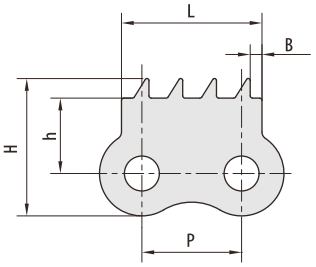

RBL chain number	p mm	h mm	H mm
16AF1	25.40	17.5	29.50
C16A-3PEP	25.40	17.4	29.00
C16BF3	25.40	18.7	29.20

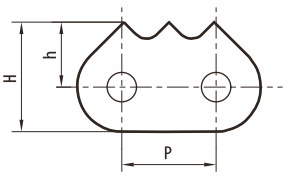

RBL chain number	p mm	h mm	H mm
12BF3	19.05	13.5	21.5
C16A-1170	25.40	16.5	28.0
16B-1170	25.40	16.0	26.5
16B-1172	25.40	15.0	25.5
C24B-4STC	38.10	18.3	35.0

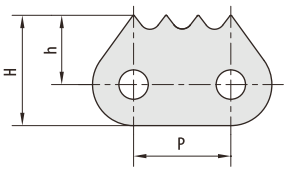

RBL chain number	p mm	h mm	H mm
C60F2	19.05	13.38	22.48

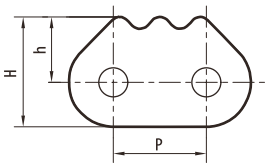

RBL chain number	p mm	h mm	H mm
12B-910	19.05	13.70	21.70
60-910	19.05	12.70	21.70
C16A1-3PEPF1	25.40	17.50	29.50
C100-1-3STC	31.75	19.15	34.15
C24A-1-3STC	38.10	23.10	40.90

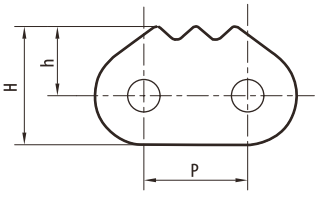

RBL chain number	p mm	h2 mm	H mm	a mm
08A-D2-F1	12.7	10.4	17.4	30°
08AF34	12.7	10.4	17.9	30°

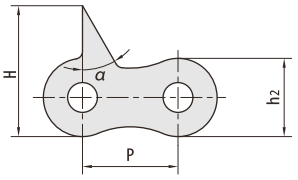

RBL chain number	p mm	h1 mm	h2 mm	H mm	A mm	a mm
08BF21	12.7	3.0	10.6	15.0	3.0	12°

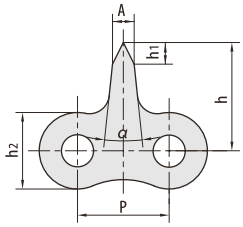

RBL chain number	p mm	H mm	h mm	G mm
088F73	12.7	20.5	5.0	23.5

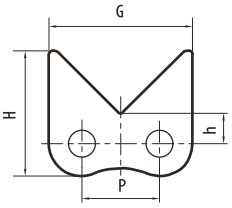

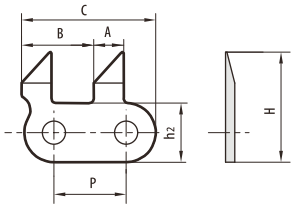

RBL chain number	p mm	A mm	B mm	C mm	A mm	H mm
10AF8	15.875	6.6	15.875	29.5	13.0	24.2

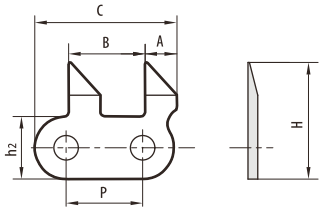

RBL chain number	p mm	H mm	h mm	h2 mm	a mm
41F6	12.7	20.6	16.35	8.70	90°

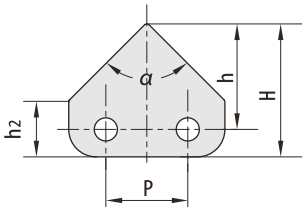

RBL chain number	p mm	h2 mm	h mm	A mm
06BF1	9.525	8.20	11.00	4.76
06BF37	9.525	8.20	10.00	4.76
08AF41	12.700	10.40	11.80	6.35
10AF78	15.875	15.09	16.88	9.72
16B-1STCF6	25.400	21.00	27.50	0.70
16BF97-STC	25.400	21.00	23.50	2.70
C210AH-1STCF1	31.750	15.00	13.50	20.00

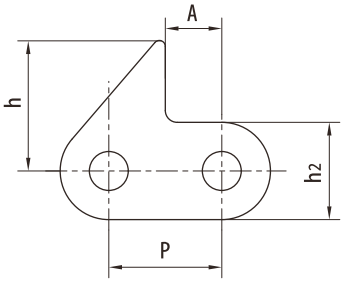

RBL chain number	p mm	H mm	A mm
08BF44	12.7	16.30	23.30
08AF8	12.7	16.13	21.34

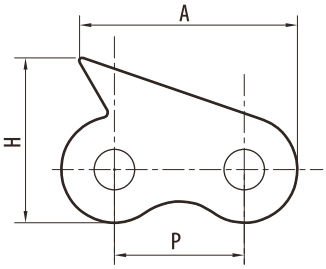

RBL chain number	p mm	C mm	h mm	a	B
428HJF1	12.7	21.5	36.15	90°	18°
428HJF2	12.7	14.5	33.60	90°	34°

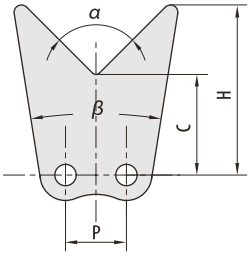

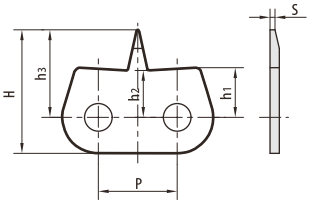

RBL chain number	p mm	h1 mm	h mm	h3 mm	H mm	S mm
08BF11	12.70	8.0	7.8	14.1	19.9	0.8

RBL chain number	p mm	h mm	H mm
08BF71	12.70	9.75	15.05

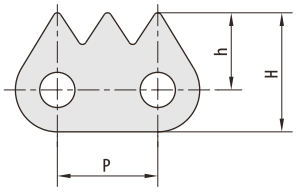

RBL chain number	p mm	h mm	H mm	L mm
C10B-5STCF1	15.875	11.3	18.8	30.9
10AF41-2	15.875	11.5	19.0	30.9
12B-911	19.050	11.9	20.0	35.0

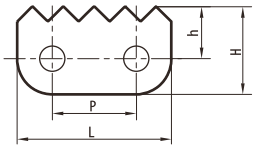

RBL chain number	p mm	h mm	H mm	L mm
C 12B-9010	19.05	13.00	21.00	19.05
C12B-940	19.05	13.20	22.30	19.75
C60-2STCF1	19.05	12.95	21.95	19.80
C60-2STCF2	19.05	13.30	22.40	19.80
C12B-1-9010	19.05	12.50	20.50	19.05
C16B-1160	25.40	17.00	27.50	25.40
C16B-1161	25.40	17.00	27.50	25.40
C16A-1160	25.40	18.00	29.50	25.40
C16A-1-1160F2	25.40	18.00	29.50	25.40
C24B-2STCF1	38.10	19.50	35.50	25.00

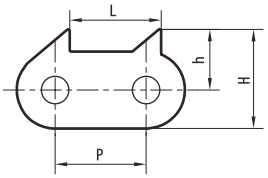

RBL chain number	p mm	h mm	H mm	L mm
16B-1187	25.40	16.00	26.50	46.00

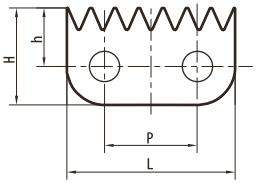

RBL chain number	p mm	h mm	H mm
16BF45	25.40	12.00	29.00

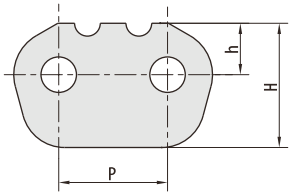

RBL chain number	p mm	H mm
C40-13STC	12.70	12.00

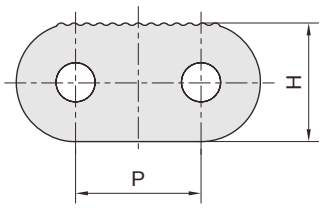

RBL chain number	p mm	h mm	H mm	L mm
08BF128	12.70	8.00	11.00	11.50

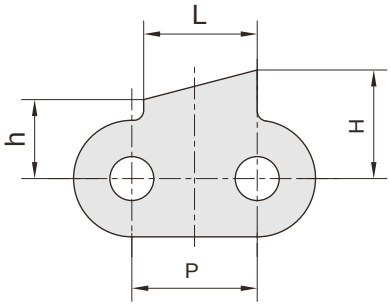

RBL chain number	p mm	h mm	H mm
12AF91	19.05	34.90	43.80

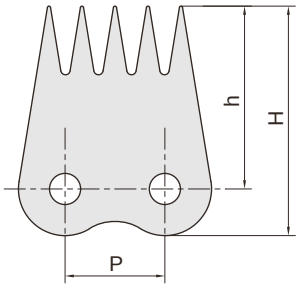

RBL chain number	p mm	h mm	H mm
60-911	19.05	9.25	18.00
60-912	19.05	9.20	17.95

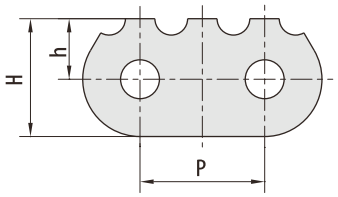

RBL chain number	p mm	h mm	H mm
60-911	19.05	9.25	18.00
60-912	19.05	9.20	17.95

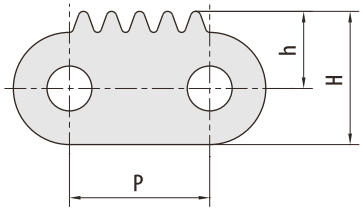

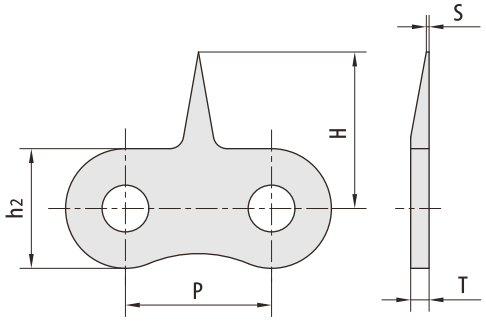

RBL chain number	p mm	h2 mm	H mm	S mm	T mm
08AF29	12.700	10.60	15.6	-	1.50
08BF90	12.700	10.60	17.0	0.3	1.60
08B-1STC F15	12.700	10.20	17.0	-	1.60
10AF2	15.875	13.00	17.0	0.3	2.03
10AF15	15.875	15.09	17.0	-	2.03
10AF23	15.875	13.00	20.8	0.3	2.03
10AF48	15.875	13.00	16.9	-	2.03
10BF50	15.875	13.70	17.0	0.3	1.70
10AF58	15.875	15.09	17.0	-	2.03

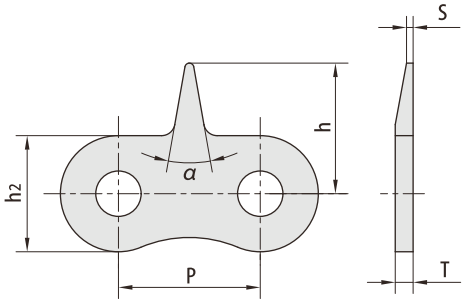

RBL chain number	p mm	h2 mm	H mm	T mm	S mm	a
08BF25	12.70	10.6	15.6	1.60	-	30°
08BF29	12.70	10.6	14.5	1.60	0.8	30°
08BF30	12.70	10.6	14.5	1.60	0.3	30°
08BF35	12.70	10.6	21.5	1.60	0.6	30°
08BF67	12.70	10.6	16.1	1.60	0.3	30°
08BF195	12.70	10.6	14.5	1.60	0.4	30°
08AF10	12.70	10.6	15.6	1.50	-	30°
12B-1STC F1	19.05	15.0	19.0	1.85	-	30°
12AF33	19.05	15.6	19.7	2.42	0.6	18°

RBL chain number	P mm	H mm	*a*
06BF39	9.525	11.00	30°
08AF10	12.700	15.60	30°
08BF30	12.700	14.50	30°
08BF38	12.700	14.60	40°
08BF5	12.700	15.30	30°
08BF51	12.700	14.00	50°
08BF56	12.700	14.40	30°
08BF86	12.700	15.00	50°
08BSSF11	12.700	14.60	40°
08A-1STC F10	12.700	13.80	30°
08AF66	12.700	17.10	45°
41-1STCF1	12.700	14.60	30°
08B-1STCF22	12.700	13.84	30°
08B-1STCF23	12.700	18.84	30°
08B-1STC F28	12.700	14.60	40°
08BF140	12.700	12.50	30°
08BF141	12.700	14.50	30°
10AF7	15.875	15.88	21°
10BF40	15.875	17.40	25°
10AF61	15.875	17.00	20°
10B-1STCF3	15.875	21.00	26°
10B-1STCF4	15.875	18.00	45°
12A-1STCFl	19.050	25.00	28°
12B-1STCFl	19.050	19.00	30°
12A-1STCF2	19.050	28.00	30°
16AF44	25.400	31.80	50°
16A-1STCF4	25.400	29.80	40°
16A-1STCF5	25.400	31.75	60°
20A-1STCF1	31.750	53.00	82.1°

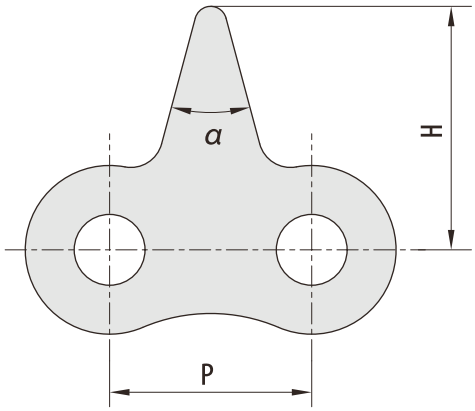

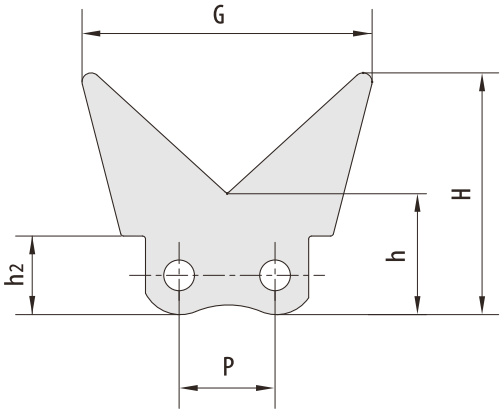

RBL chain number	P mm	H mm	h mm	h2 mm	G mm
50F21	15.875	40.0	20.0	13.0	48.0

RBL chain number	P mm	L mm	h mm	H mm
16B-1180	25.40	46.00	12.2	22.5

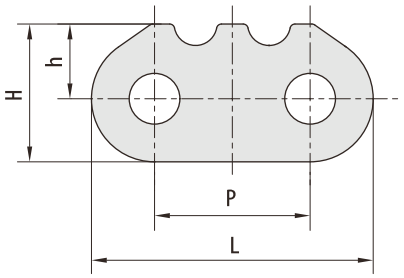

RBL chain number	P mm	L mm	h mm	H mm	*a*
25HF5-6STC	6.35	5.8	8.8	12.2	90°
16B-1185	25.40	46.0	16.0	26.5	75°
16B-6STC	25.40	46.0	16.0	26.5	73.4°

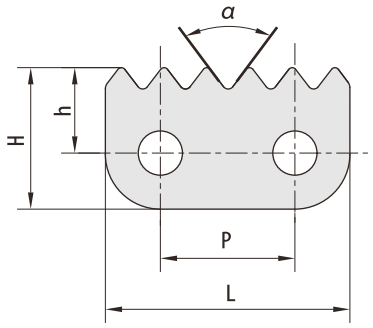

RBL chain number	P mm	h mm	H mm	*a*
16B-2STCF1	25.40	15.0	24.75	88°
20A-2STCF1	31.75	23.0	35.95	80°
20A-2STCF3	31.75	23.0	35.95	82°
32B-2STCF1	50.80	34.0	55.00	91.46°

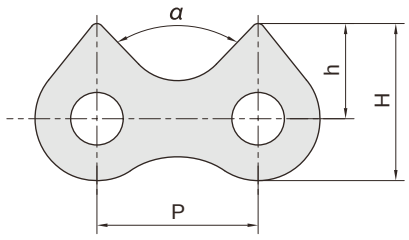

RBL chain number	P mm	h mm	H mm
24B-1810	38.10	19.00	35.50
120F6	38.10	21.00	35.50

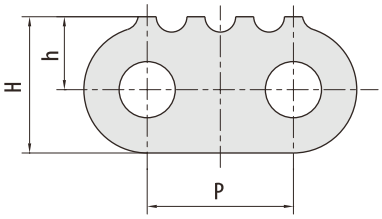

RBL chain number	P mm	L mm	H mm
16BF5	25.40	48.8	22.90
16BF6	25.40	46.0	30.00

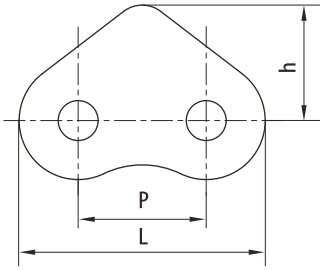

RBL chain number	P mm	h mm	H mm
C 12B F56-STC	19.05	13.00	22.00
16A-1171	25.40	16.00	26.40
C16A-5PEP	25.40	17.40	29.00
C16AF2	25.40	17.50	29.50
C16A-5PEPF1	25.40	17.30	29.50
C16BF2	25.40	18.70	29.20
16BF24	25.40	16.00	26.40
26BF29	25.40	15.90	26.40
C16A-2-5PEPF1	25.40	17.30	29.50
16B-5STCF3	25.40	13.70	24.20
16B-5STCF4	25.40	13.90	24.40
16B-5STCF5	25.40	13.50	24.00
C100-2-5STC	31.75	20.70	35.43
C24B-1831	38.10	22.50	39.00
24A-1-STC	38.10	21.00	38.05

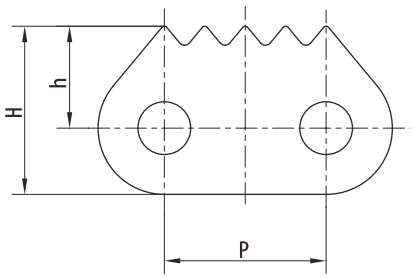

RBL chain number	P mm	h mm	H mm
C20BF9	31.75	19.80	33.00

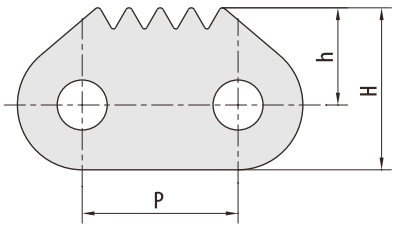

RBL chain number	P mm	h mm	H mm
20BF8	31.75	19.80	33.00
20B-1310	31.75	19.80	33.00
20B-6STCF1	31.75	16.50	30.00
C24B-6STCF1	38.10	23.50	40.00

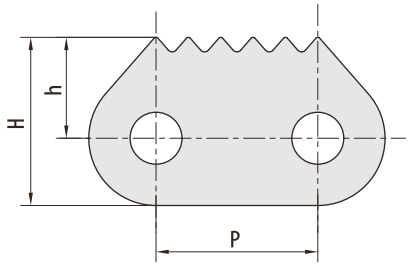

RBL chain number	P mm	h mm	H mm
20B-1350	31.75	19.80	33.00

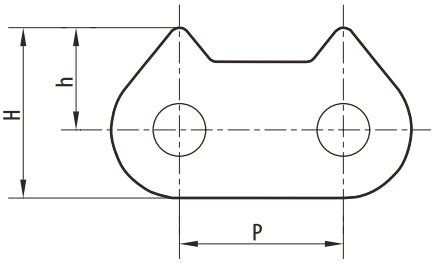

RBL chain number	P mm	L mm	h mm	H mm
20AF1	31.75	57.20	14.75	35.84

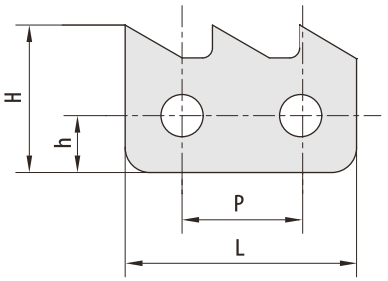

RBL chain number	P mm	h mm	H mm
20B-6STC	31.75	16.50	29.20

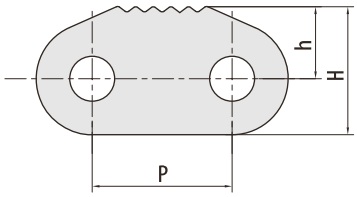

RBL chain number	P mm	L mm	h mm	H mm
C20A-1-4STC	31.75	46.75	18.3	33.3
120-1802	38.10	73.10	21.00	38.5
24B-1809	38.10	73.10	21.0	38.5

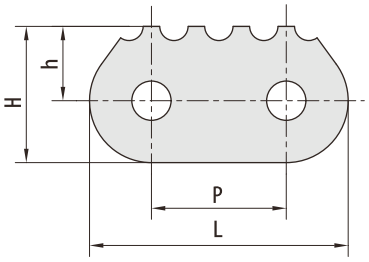

24B-1805

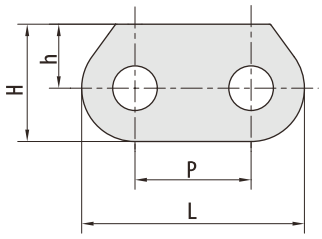

24B-1807

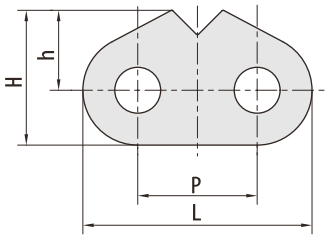

C24B-1820

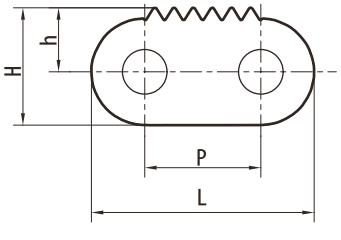

RBL chain number	P mm	L mm	h mm	H mm
24B-1805	38.10	73.10	21.0	38.5
24B-1807	38.10	73.10	25.5	43.0
C24B-1820	38.10	73.10	21.0	38.5

RBL chain number	P mm	h mm	H mm	L mm
32BF4	50.80	26.00	70.00	30.00

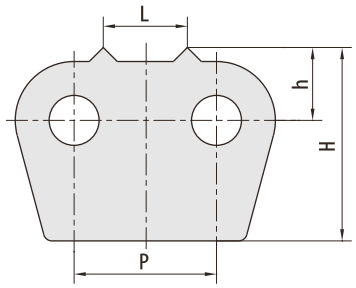

RBL chain number	P mm	h mm	H mm	L mm
32B-1875	50.80	27.00	72.00	19.00
32BF20-1875	50.80	30.00	74.00	13.50

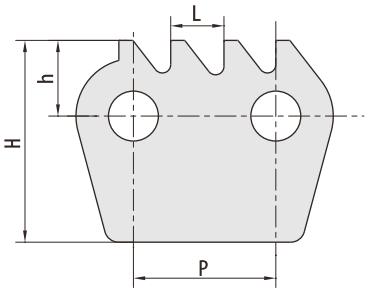

RBL chain number	P mm	h mm	H mm	L mm
32B-1876	50.80	27.00	72.00	50.80

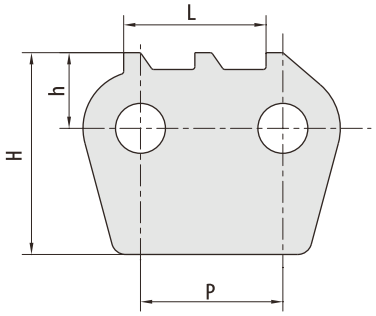

RBL chain number	P mm	h mm	H mm	L mm
32B-1877	50.80	30.00	51.00	50.80

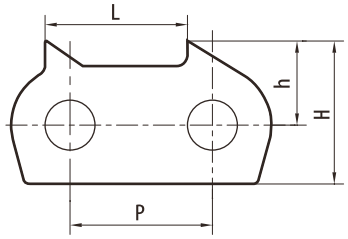

RBL chain number	P mm	h mm	H mm	L mm
32B-1878	50.80	27.00	72.00	50.80

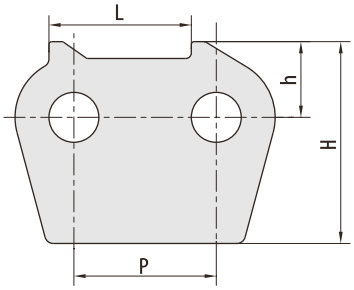

RBL chain number	P mm	G mm	h mm	H mm	*a*
08A-5STCF7	12.700	25.00	21.50	26.50	10°
08B-5STC F1	12.700	25.00	20.00	25.00	11°
08B-5STCF5	12.700	25.20	21.00	26.00	11°

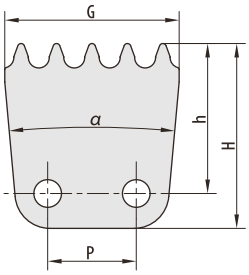

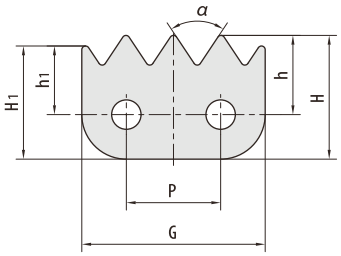

RBL chain number	P mm	G mm	h1 mm	H1 mm	h mm	H mm	*a*
08A-5STCF1	12.7	24.7	9.25	15.25	10.65	16.65	67°

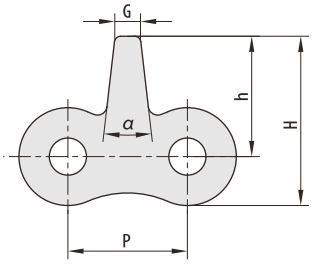

RBL chain number	P mm	G mm	h mm	H mm	*a*
12A-1STCF6	19.050	4.00	19.20	27.00	15°

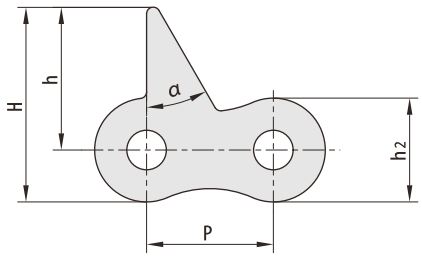

RBL chain number	P mm	h mm	h2 mm	H mm	*a*
12A-1STCF4	19.050	24.20	15.60	32.00	30°

RBL chain number	P mm	h2 mm	H mm	*a*
80-STCF1	25.400	23.00	14.70	90°

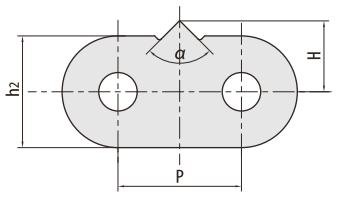

RBL chain number	P mm	h mm	H mm
C16A-2-4STCF1	25.400	16.50	28.00
16B-2-1172F1	25.400	15.00	25.50
C20A-1-4STCF1	31.750	20.50	35.50

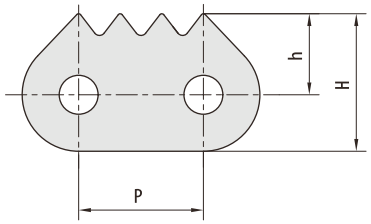

RBL chain number	P mm	h mm	H mm	a
16A-1STCF3	25.40	62.00	72.25	26“

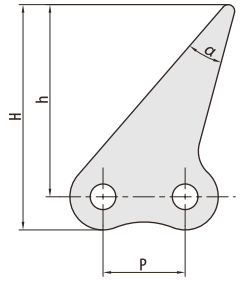

RBL chain number	P mm	h2 mm	H mm	*a*
C20A-2-1STC	31.75	30.00	35.43	45°

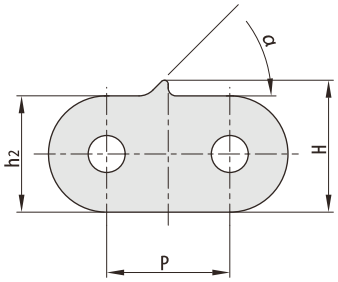

RBL chain number	P mm	G mm	h mm	H mm	*a*
06B-2STCF2	9.42	17.60	9.90	14.00	75“

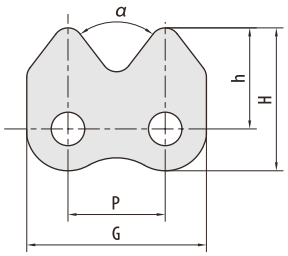

RBL chain number	P mm	h mm	H mm	a
08B-25TCF1	12.70	9.80	15.10	60"

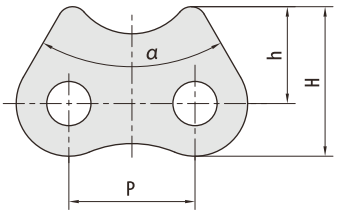

RBL chain number	p mm	h2 mm	h mm	H mm	L mm	a
08B-1STCF30	12.70	10.60	16.00	21.30	3.00	60"

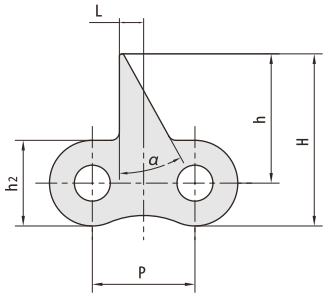

RBL chain number	p mm	G mm	h mm	H mm	a
08B-5STCF3	12.70	25.20	21.50	26.50	11"
08B-5STCF4	12.70	25.20	21.50	26.50	10°

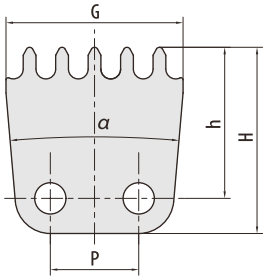

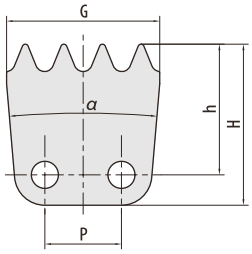

RBL chain number	p mm	G mm	h mm	H mm	a
08B-5STCF3	12.70	25.20	21.50	26.50	9.8"

RBL chain number	p mm	L mm	h mm	H mm	a
08B-4STC F1	12.70	23.30	12.00	17.30	60°

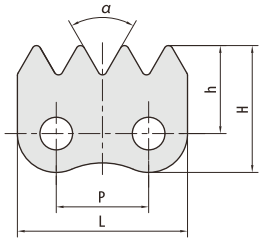

RBL chain number	p mm	H mm	S mm	a
08B-2STCF2	12.70	10.60	0.50	30°

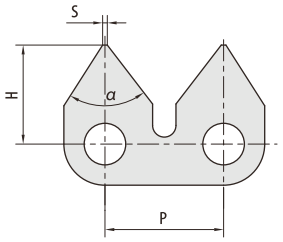

RBL chain number	p mm	h2 mm	h mm	A mm
08BF161	12.70	10.60	11.00	1.50

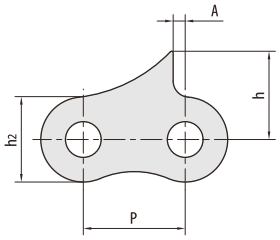

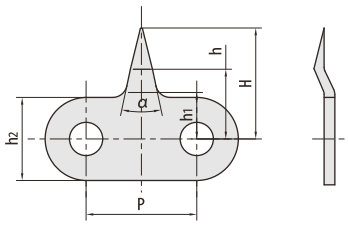

RBL chain number	p mm	h1 mm	h2 mm	h mm	H mm	a
C12B-1STCF3	19.050	8.00	14.30	12.00	20.00	24°

RBL chain number	P mm	h2 mm	h mm	H mm
C16B-1STCF4	25.40	21.00	26.50	37.00

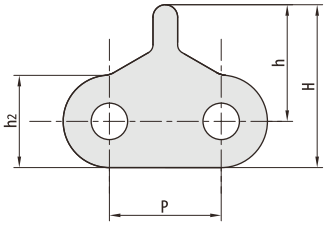

RBL chain number	P mm	L mm	h mm
16B-1STCF3	25.400	46.00	30.00

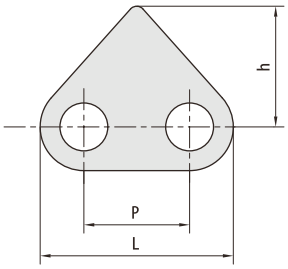

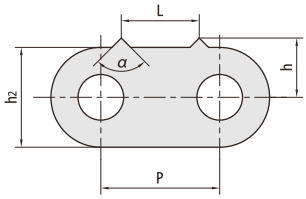

RBL chain number	P mm	h2 mm	h mm	L mm	*a*
24B-2STC	38.10	32.00	19.00	25.00	90°

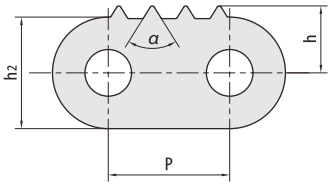

RBL chain number	P mm	h2 mm	h mm	*a*
C24BSA0F14STC	38.10	35.00	21.00	64°

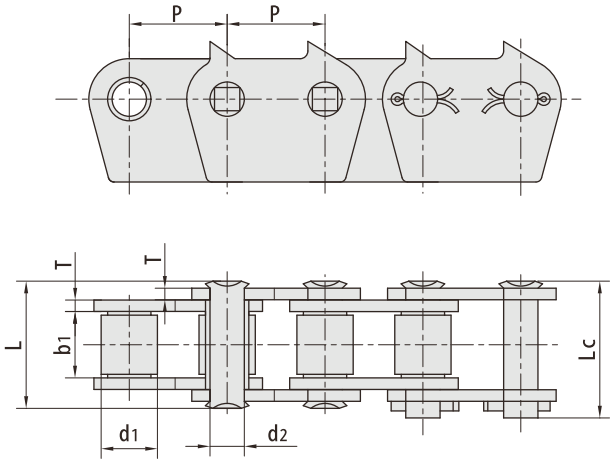

RBL chain number	Pitch	Roller diameter	Width between inner plates	Pin diameter	Pin length		Plate thickness	Tensile strength	Average Tensile strength	Weight
	P mm	d1 max mm	b1 min mm	d2 max mm	L max mm	Lc max mm	t/T max mm	q kN/LBF	Qo kN	q kg/m
32B-1-1872	50.8	29.21	33.0	17.81	66.0	71.0	6.0	250.0/56818	275.0	13.54

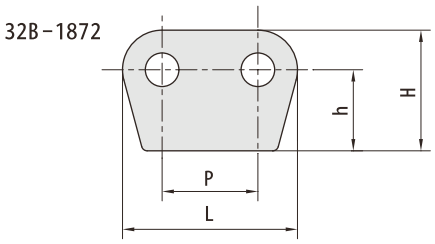

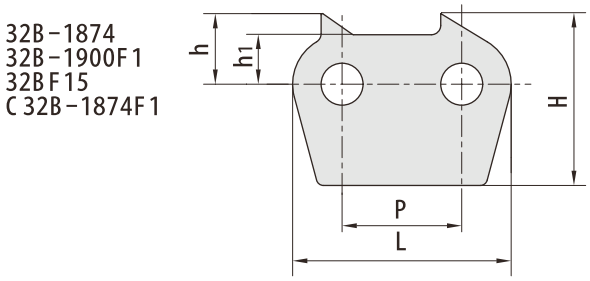

RBL chain number	P mm	L mm	h1 mm	h mm	H mm
32B-1872	50.8	92.8	-	43.0	64.0
32B-1874	50.8	92.8	21.0	30.0	73.0
32B-1900F1	50.8	92.8	21.0	30.0	75.0
32BF15	50.8	91.8	20.0	45.0	75.0
C32B-1874F1	50.8	92.8	21.0	40.0	83.0

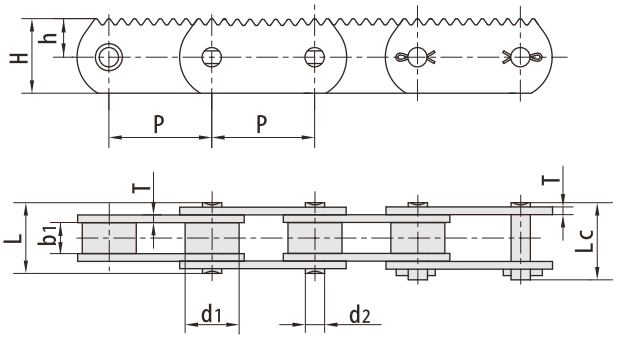

RBL chain number	P mm	h mm	H mm
P80	80.0	30	58

RBL chain number	Pitch P mm	Roller diameter d1 max mm	Width between inner plates b1 min mm	Pin diameter d2 max mm	Pin length L max mm	Pin length Lc max mm	Plate thickness T max mm	Tensile strength q kN/LBF	Average Tensile strength Qo kN	Weight q kg/m
P80	80	42	24	15	55	60	6	250.0/56818	275	11.3

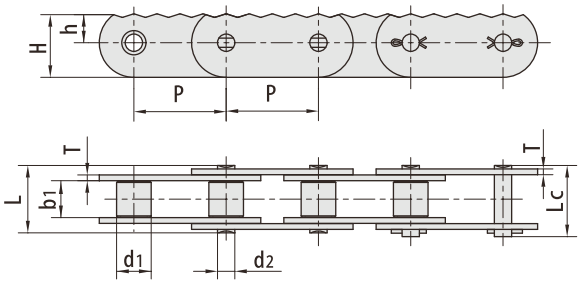

RBL chain number	P mm	h mm	H mm
P80F3	80.0	25	55
P80F32	80.0	20	40

RBL chain number	Pitch P mm	Roller diameter d1 max mm	Width between inner plates b1 min mm	Pin diameter d2 max mm	Pin length L max mm	Pin length Lc max mm	Plate thickness T max mm	Tensile strength q kN/LBF	Average Tensile strength Qo kN	Weight q kg/m
P80F3	80.0	30.0	32.0	15.0	58.6	62.6	5.0	98.0/20909	107.0	9.12
P80F32	80.0	30.0	30.0	15.0	63.0	72.0	6.0	112.0/25194	123.2	7.28

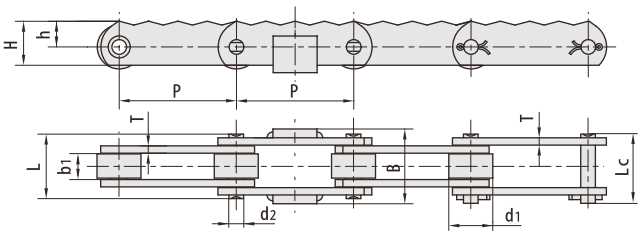

RBL chain number	P mm	h mm	H mm	B mm
P80F2	80.0	17.5	30.0	51

RBL chain number	Pitch P mm	Roller d1 max mm	Width b1 min mm	Pin d2 max mm	Pin length L max mm	Pin length Lc max mm	Plate T max mm	Tensile q kN/LBF	Average Qo kN	Weight q kg/m
P80F2	80.0	30.0	18.0	10.0	44.6	48.3	5.0	61.74/14030	70.0	4.15

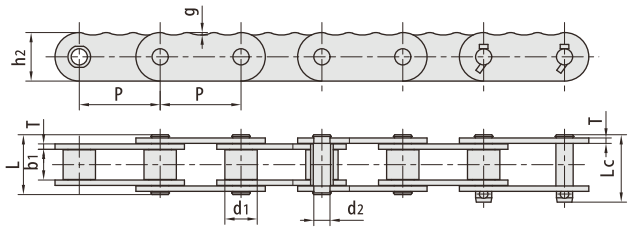

RBL chain number	Pitch P mm	Roller diameter d1 max mm	Width between inner plates b1 min mm	Pin diameter d2 max mm	Pin length L max mm	Pin length Lc max mm	Plate dimension h2 max mm	Plate dimension g mm	Plate thickness T max mm	Tensile strength Q min kN/LBF
P150F77	150.0	60.0	57.0	30.0	114.0	128.0	90.0	4.6	10.0	666.4/149812

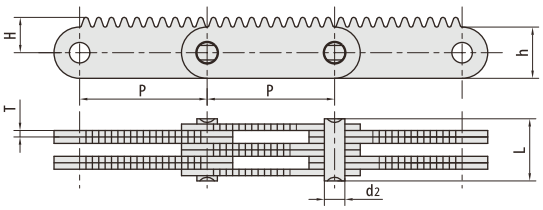

RBL chain number	Pitch P mm	Plate lacing	Pin diameter d2 max mm	Pin length L max mm	Plate dimension h max mm	Plate dimension T max mm	Distance from hole centre to tooth H max mm	Tensile strength Q min kN/LBF	Weight q kg/m
F3144F1	31.60	4X4	5.08	16.1	12.7	1.6	8.75	40.0/8992	0.942
F2544F1	25.28	4X4	5.08	16.1	12.7	1.6	8.75	40.0/8992	0.987

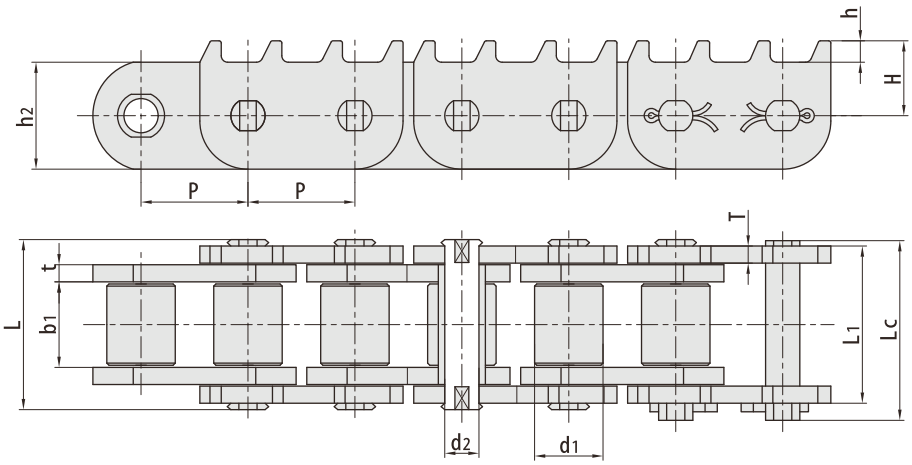

RBL chain number	Pitch	Roller diameter	Width between inner plates	Pin diameter	Pin length			Plate dimension				Tensile strength	Weight
	P mm	d1 min mm	b1 min mm	d2 max mm	L max mm	Lc max mm	L1 mm	h2 max mm	t/T max mm	h mm	H mm	Q min kN/LBF	q kg/m
P50F19	50.0	32.0	40.0	16.0	79.5	84.0	-	50.0	8.0	10.0	35.0	260.0/58448	16.40
KP503F54-B	50.8	32.0	42.0	16.0	-	-	75.2	51.0	8.0	8.5	34.0	107.8/24233	16.90

*Bush chain: d1 in the table indicates the external diameter of the bush.

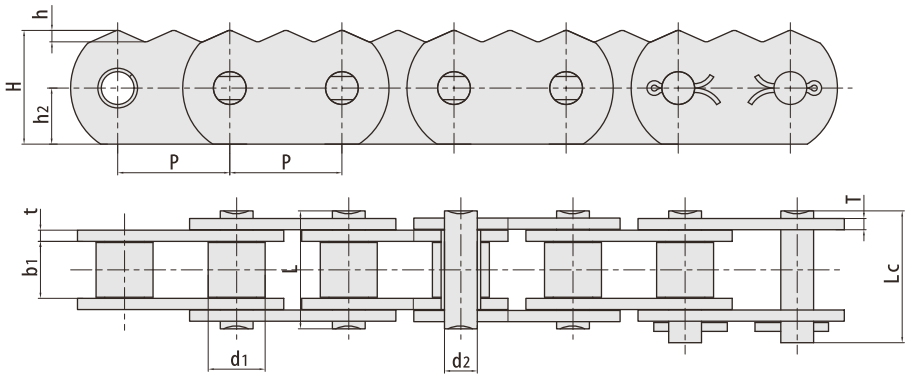

RBL chain number	Pitch	Roller diameter	Width between inner plates	Pin diameter	Pin length		Plate dimension				Tensile strength	Weight
	P mm	d1 min mm	b1 min mm	d2 max mm	L max mm	Lc max mm	h2 max mm	t/T max mm	h mm	H mm	Q min kN/LBF	q kg/m
P50-35TC	50.0	25.4	25.40	14.63	53.4	57.8	25.0	5.0	5.0	50.0	120.0/26976	8.55
P50F49-3STC	50.0	25.4	25.40	14.63	53.4	57.8	25.0	5.0	5.1	50.7	120.0/26976	8.60

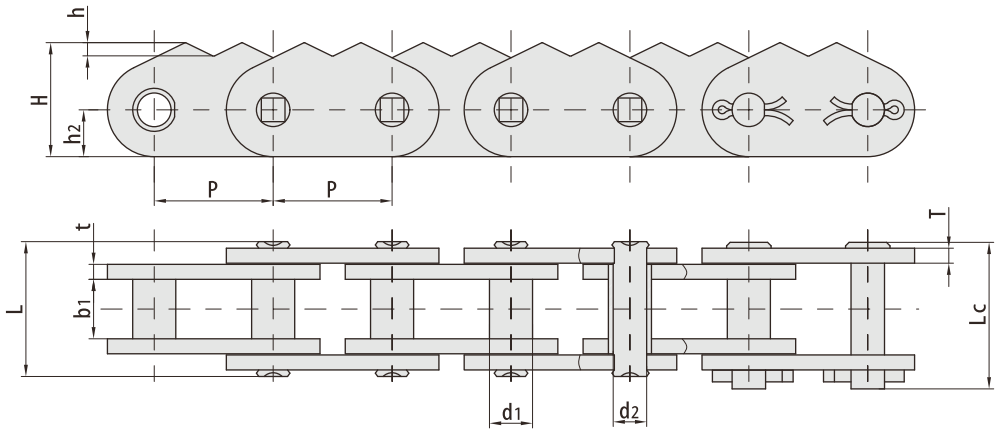

RBL chain number	Pitch	Roller diameter	Width between inner plates	Pin diameter	Pin length		Plate dimension				Tensile strength	Weight
	P	d1 min	b1 min	d2 max	L max	Lc max	h2 max	t/T max	h	H	Q min	q
	mm	mm	mm	mm	mm	mm	mm	mm	mm	mm	kN/LBF	kg/m
P50.8F60-2STCB	50.8	18.4	25.40	14.27	58.2	63.4	20.0	6.4	5.7	48.7	200.0/44960	8.30

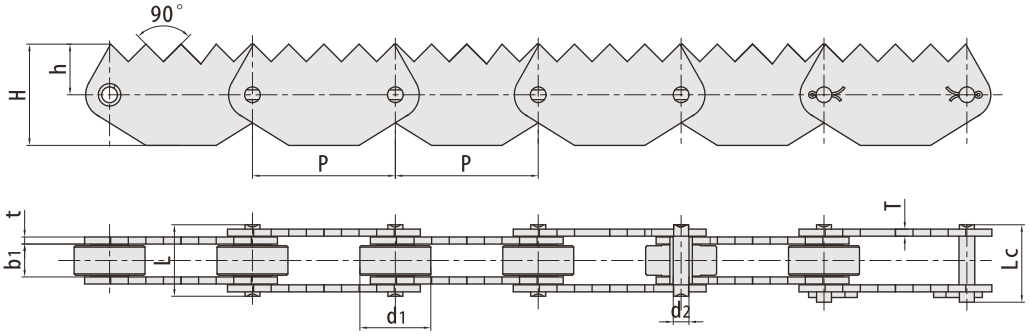

RBL chain number	Pitch	Roller diameter	Width between inner plates	Pin diameter	Pin length		Plate dimension			Tensile strength	Weight
	P	d1 min	b1 min	d2 max	L max	Lc max	t/T max	h	H	Q min	q
	mm	mm	mm	mm	mm	mm	mm	mm	mm	kN/LBF	kg/m
P50.8F20	50.8	25.0	11.70	5.60	25.4	28.0	2.5	18.0	36.0	24.0/5395	2.25

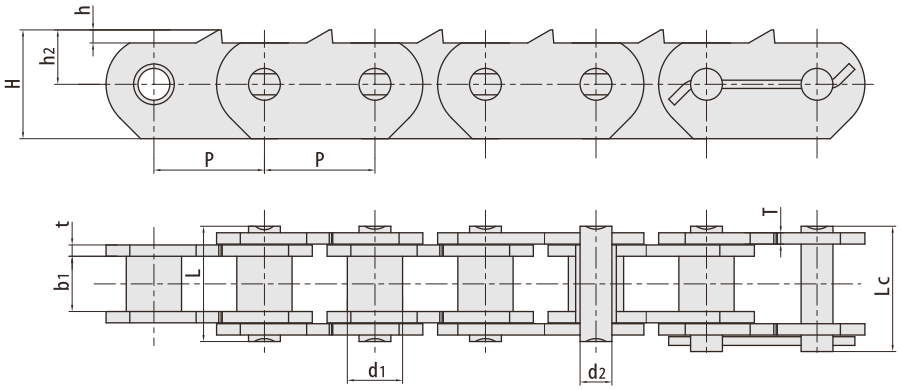

RBL chain number	Pitch	Roller diameter	Width between inner plates	Pin diameter	Pin length		Plate dimension				Tensile strength	Weight
	P mm	d1 min mm	b1 min mm	d2 max mm	L max mm	Lc max mm	t/T max mm	h mm	h2 mm	H mm	Q min kN/LBF	q kg/m
P50.8F11	50.8	25.0	25.40	14.63	52.8	57.1	5.2	6.0	25.0	50.0	145.0/32596	8.23

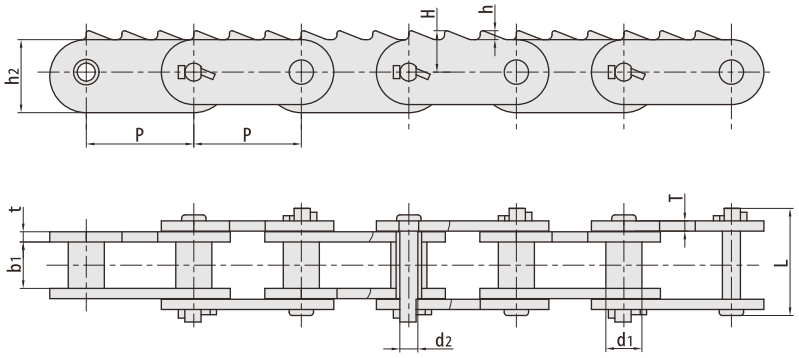

RBL chain number	Pitch	Roller diameter	Width between inner plates	Pin diameter	Pin length	Plate dimension				Tensile strength	Weight
	P mm	d1 min mm	b1 min mm	d2 max mm	L max mm	t/T max mm	h2 mm	h mm	H mm	Q min kN/LBF	q kg/m
P6626F3-3STC	66.26	22.22	28.60	11.10	42.2	6.4	45.0	5.5	25.5	110.0/24728	8.02

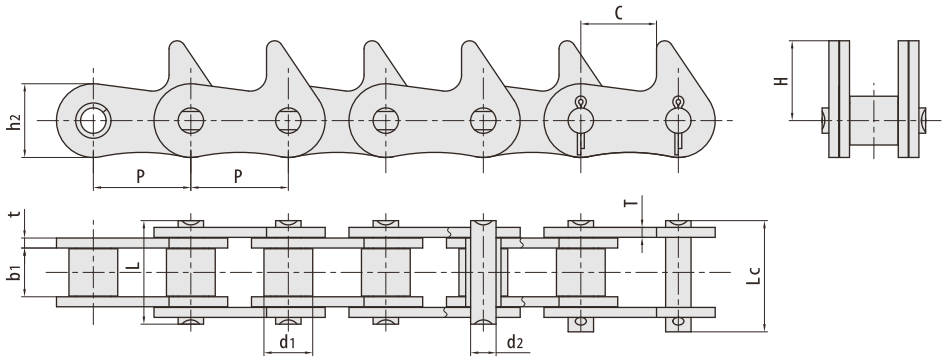

RBL chain number	Pitch	Roller diameter	Width between inner plates	Pin diameter	Pin length		Plate dimension				Tensile strength	Weight
	P mm	d1 min mm	b1 min mm	d2 max mm	L max mm	Lc max mm	t/T max mm	h2 mm	C mm	H mm	Q min kN/LBF	q kg/m
P31.75F18-1STC	31.75	15.88	15.88	11.1	34.0	36.5	3.25	24.0	24.65	26.0	60.0/I3488	3.22
P38.1F29	38.10	15.88	15.88	11.1	34.0	36.5	3.25	24.0	24.65	26.0	60.0/I3489	2.56

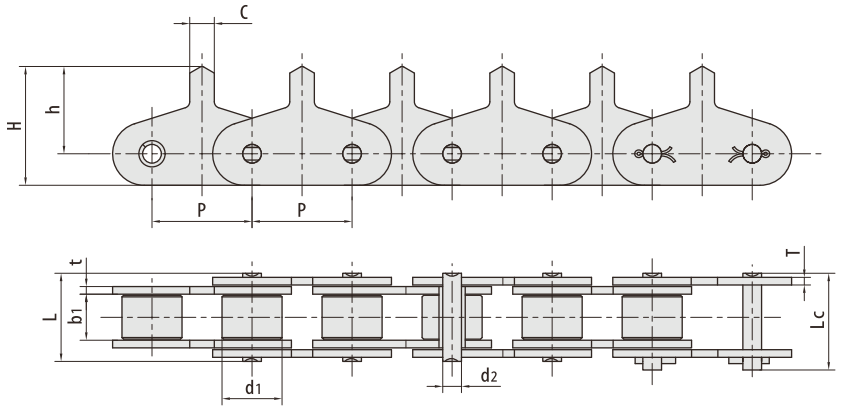

RBL chain number	Pitch	Roller diameter	Width between inner plates	Pin diameter	Pin length		Plate dimension				Tensile strength	Weight
	P mm	d1 min mm	b1 min mm	d2 max mm	L max mm	Lc max mm	t/T max mm	C mm	h mm	H mm	Q min kN/LBF	q kg/m
P31.75F2	31.75	19.05	14.50	5.94	27.5	30.2	2.42	7.8	27.7	37.7	31.8/7149	15.89

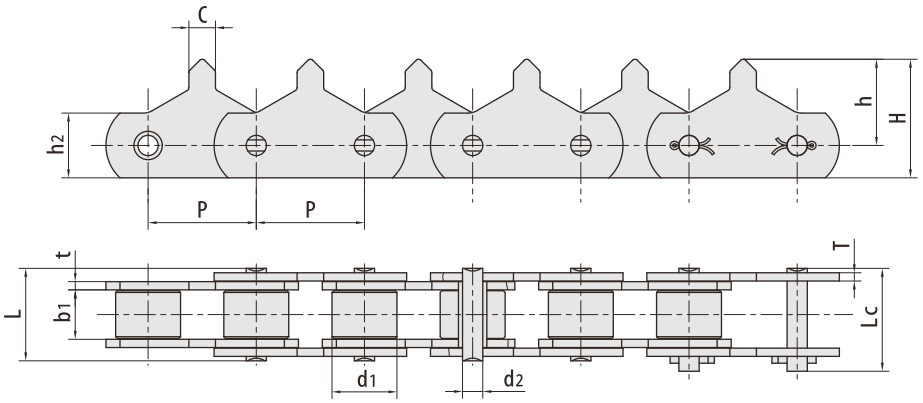

RBL chain number	Pitch	Roller diameter	Width between inner plates	Pin diameter	Pin length		Plate dimension					Tensile strength	Weight
	P	d1 min	b1 min	d2 max	L max	Lc max	t/T max	h2	C	h	H	Q min	q
	mm	mm	mm	mm	mm	mm	mm	mm	mm	mm	mm	kN/LBF	kg/m
P31.75F14-1STC	31.75	19.05	5.94	5.94	27.50	30.20	2.42	19.00	7.80	25.30	34.80	31.80/7149	2.46
P31.75F3	31.75	12.07	11.68	5.74	27.20	30.00	3.00	18.00	10.30	25.30	34.30	30.00/6744	2.46

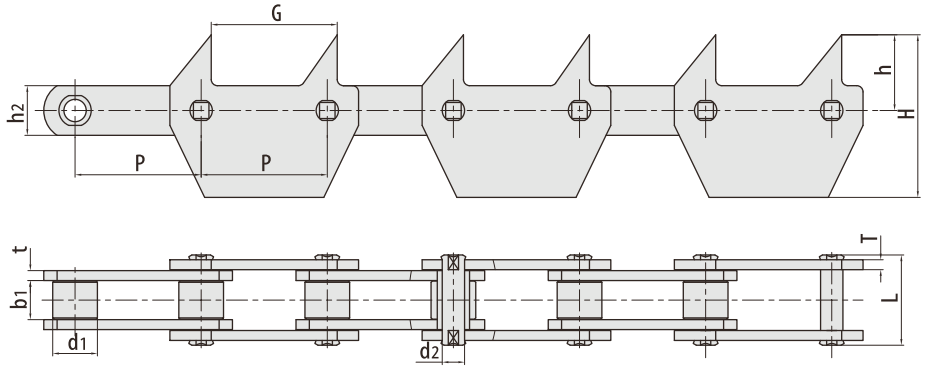

RBL chain number	Pitch	Roller diameter	Width between inner plates	Pin diameter	Pin length	Plate dimension					Tensile strength	Weight
	P	d1 min	b1 min	d2 max	L max	t/T	h2	G	h	H	Q min	q
	mm	mm	mm	mm	mm	mm	mm	mm	mm	mm	kN/LBF	kg/m
P101.6F1592STC	101.6	36.00	31.50	18.00	72.7	8.0	40.0	101.5	61.0	131.0	195.0/43836	14.42

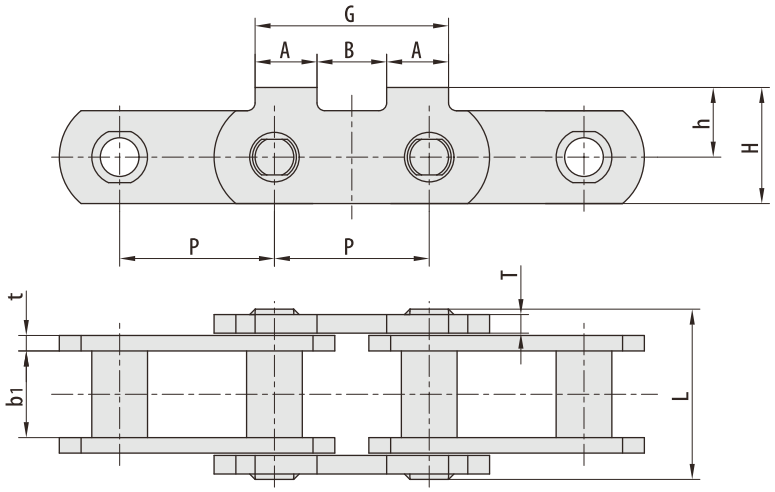

RBL chain number	P mm	b1 mm	t/T mm	L mm	h mm	H mm	G mm	A mm	B mm
P100F314	100.00	55.00	10.0/12.0	110.00	45.00	75.00	125.00	40.00	45.00

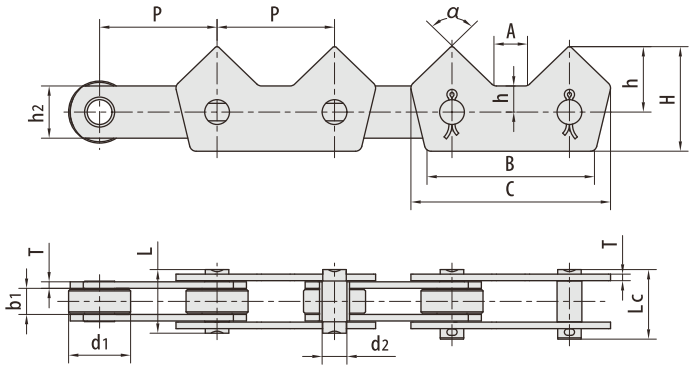

RBL chain number	Pitch P mm	Roller diameter d1 min mm	Width between inner plates b1 min mm	Pin diameter d2 max mm	Pin length L max mm	Pin length Lc max mm	Inner plate depth h2 mm	Plate thickness T mm	Attachment dimension h mm	Attachment dimension H mm	Attachment dimension a mm	Tensile strength Q min kN/LBF	Weight q kg/m
P90F12-2STC	90.00	47.50	19.00	19.00	48.8	53.3	40.0	5.00	49.0	79.0	92“	100.0/22480	9.12

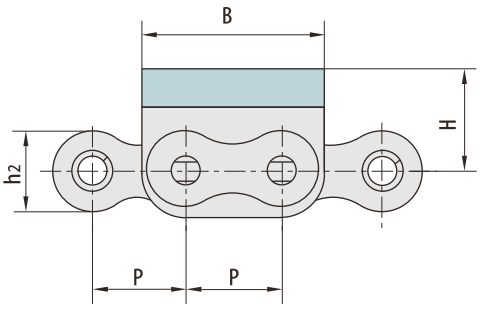

With G1 profile

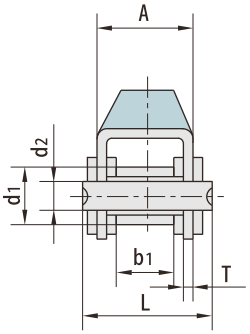

With G2 profile

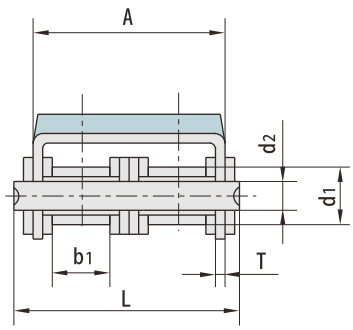

RBL chain number	Pitch	Roller diameter	Width between inner plates	Pin diameter	Pin length	Plate & Attachment dimension					Tensile strength	Weight
	P mm	d1 min mm	b1 min mm	d2 max mm	L max mm	h2 max mm	A mm	B mm	H mm	T mm	Q min kN/LBF	q kg/m
08B-G1	12.700	8.51	7.75	4.45	20.0	11.80	14.60	24.20	12.3	1.60	18.0/4091	1.19
08B-G2	12.700	8.51	7.75	4.45	34.3	11.80	28.40	24.20	12.3	1.50	32.0/7273	2.07
10A-G1	15.875	10.16	9.40	5.08	24.5	15.09	17.50	31.00	17.0	1.60	21.8/4953	1.70
10B-G1	15.875	10.16	9.65	5.08	23.2	14.70	16.80	30.00	17.0	1.60	19.0/4318	1.62
10B-G2	15.875	10.16	9.65	5.08	39.7	14.70	33.30	30.00	17.0	1.50	44.5/10004	2.56
10B-G2F5	15.875	10.16	9.65	5.08	39.7	14.70	33.30	30.00	25.3	1.50	44.5/10004	2.58
12B-G1	19.050	12.07	11.68	5.72	25.7	16.00	19.60	36.00	21.0	1.85	29.0/6591	2.01
12B-G2	19.050	12.07	11.68	5.72	45.3	16.00	39.10	36.00	16.0	1.85	57.8/13136	3.21
12A-G1	19.050	11.91	12.57	5.94	29.9	18.00	21.40	37.05	21.0	1.85	31.8/7153	2.55
12A-G2	19.050	11.91	12.57	5.94	52.9	18.00	44.50	37.05	21.0	1.85	62.3/14005	4.25
12AF1-G1	19.050	11.91	17.00	5.94	34.00	18.00	26.00	36.00	16.00	1.85	31.8/7153	2.62
16A-G1	25.400	15.88	15.75	7.92	37.2	24.00	27.50	46.00	20.0	2.42	42.0/9545	3.97
16A-G2	25.400	15.88	15.75	7.92	68.0	24.00	57.20	46.00	20.0	2.42	84/18896	7.27
16B-G1F12	25.400	15.88	17.02	8.28	39.7	21.00	29.05	49.00	21.4	1.60	58.0/13047	3.95
20A-G1	31.750	19.05	18.90	9.53	46.8	30.00	34.00	57.60	28.0	3.10	86.7/19503	6.15
20B-G1	31.750	19.05	19.56	10.19	48.0	26.40	36.00	57.00	27.0	3.50	85.0/19318	6.19
24B-G1	38.100	25.40	25.40	14.63	61.6	33.20	47.00	72.60	34.0	4.50	160.0/36363	11.25

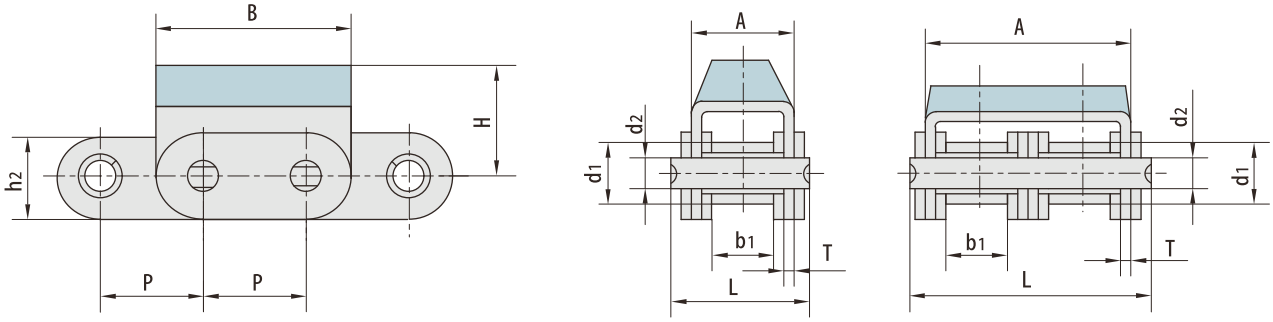

RBL chain number	Pitch	Roller diameter	Width between inner plates	Pin diameter	Pin length	Plate & Attachment dimension					Tensile strength	Weight
	P mm	d1 min mm	b1 min mm	d2 max mm	L max mm	h2 max mm	A mm	B mm	H mm	T mm	Q min kN/LBF	q kg/m
C08B-G1	12.700	8.51	7.75	4.45	20.0	11.80	14.60	24.20	12.3	1.60	18.0/4091	1.30
C08B-G2	12.700	8.51	7.75	4.45	34.3	11.80	28.40	24.20	12.3	1.50	32.0/7273	2.29
C10B-G1	15.875	10.16	9.65	5.08	23.2	14.70	16.80	30.00	17.0	1.60	19.0/4318	1.75
C10B-G1F1	15.875	10.16	9.65	5.08	23.2	14.70	16.80	30.00	13.0	1.60	19.0/4318	1.70
C50-G2F1	15.875	10.16	9.40	5.08	42.5	15.09	35.60	27.00	17.0	1.60	43.6/9906	2.14
C50-G2	15.875	10.16	9.40	5.08	42.5	15.09	35.60	31.00	17.0	1.60	43.6/9906	2.14
C10B-G2	15.875	10.16	9.65	5.08	39.7	14.70	33.30	30.00	17.0	1.50	44.5/10114	2.95
C12B-G1	19.050	12.07	11.68	5.72	25.7	16.00	19.60	36.00	21.0	1.85	29.0/6591	2.15
C12B-G2	19.050	12.07	11.68	5.72	45.3	16.00	39.10	36.00	16.0	1.85	57.8/13136	3.48
C16A-G1	25.400	15.88	15.75	7.92	37.2	24.00	27.50	46.00	20.0	2.42	42.0/9545	4.34
C16A-G2	25.400	15.88	15.75	7.92	68.0	24.00	57.20	46.00	20.0	2.42	84.0/18883	8.20
C20A-G1	31.750	19.05	18.90	9.53	46.8	30.00	34.00	61.75	28.0	3.10	86.7/19490	9.10
C20B-G1	31.750	19.05	19.56	10.19	48.0	26.40	36.00	57.00	27.0	3.50	85.0/19318	6.65
C20B-G2	31.750	19.05	29.56	10.19	85.0	26.40	73.00	58.15	27.0	3.50	170.0/38217	10.40
C24B-G1	38.100	25.40	25.40	14.63	61.6	33.20	47.00	72.60	34.0	4.50	160.0/36363	11.63

RBL chain number	P mm	A mm	B mm	H mm	T mm
08B-G1F1	12.700	18.0	24.2	12.3	1.6
10B-G1F2	15.875	25.0	30.0	14.0	1.6
10B-G1F3	15.875	20.0	30.0	18.0	1.6
10B-G1F4	15.875	18.6	30.0	11.4	1.6

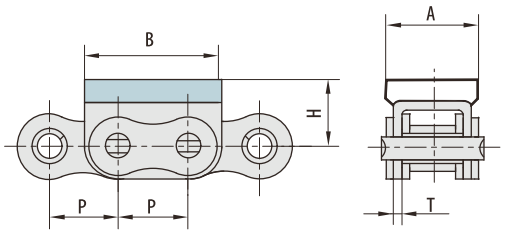

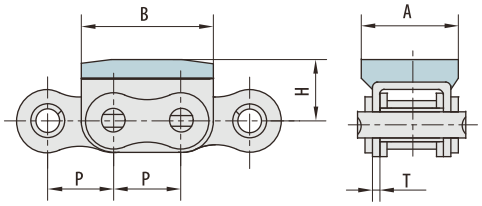

RBL chain number	P mm	A mm	B mm	H mm	T mm
08B-G1F4	12.7	18.0	24.2	12.3	1.6

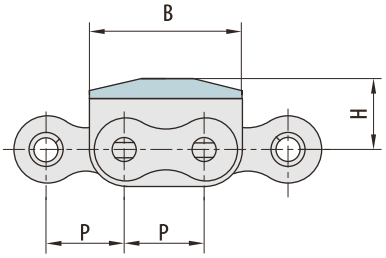

RBL chain number	P mm	A mm	B mm	H mm	T mm	L3 mm
08B-G2F1	12.70	28.40	24.2	12.0	1.50	-
08B-G1F14-DD3	12.70	14.60	24.2	16.0	1.60	6.3
08B-G2F15	12.70	28.40	24.2	12.8	1.50	-
08B-G2F22	17.70	28.40	24.2	12.0	1.50	-
16A-G2F3	25.40	27.50	49.0	21.4	2.42	-
16B-G1	25.40	29.05	49.0	21.4	1.60	-
16B-G1F11-DD3	25.40	29.05	49.0	21.4	1.60	4.8
C16B-G1	25.40	29.05	49.0	21.4	1.60	-
C16B-G2	25.40	60.93	49.0	21.4	1.60	-
20B-G1F2	31.75	36.00	57.0	35.0	3.50	-
24B-G1F1	38.10	47.00	72.6	34.0	4.50	-
24B-G1F7	38.10	47.00	72.6	34.0	4.50	-

C 16B-G 1 20B-G 1F2
16B-G 1 24B-G 1F1
24B-G 1F7

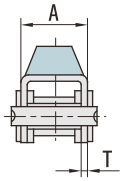

C 16B-G 2
08B-G 2F1
08B-G 2F15
08B-G 2F22

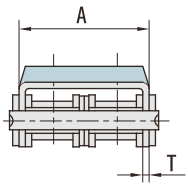

16A-G 2F3

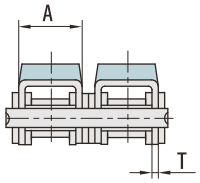

08B-G 1F14-D D 3
16B-G 1F11-D D 3

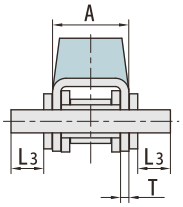

RBL chain number	P mm	A mm	B mm	H mm	T mm
08B-G1F17	12.700	14.60	24.2	20.2	1.60
10B-G1F5	15.875	16.80	30.0	25.3	1.70
10A-G1F6	15.875	16.80	30.0	14.0	1.60
12B-G1F11	19.050	19.60	36.0	17.0	1.85
12A-G1F12	19.050	39.10	36.0	21.0	1.85
12B-G2F10	19.050	39.10	36.0	28.0	1.85
12A-G2F12	19.050	39.10	36.0	21.0	1.85
12B-G2F5	19.050	39.10	36.0	28.0	1.85
16A-G1F1	25.400	27.50	46.0	21.4	2.42
16B-G1F18	25.400	29.05	49.0	32.0	1.60
20B-G1F1	31.750	36.00	57.0	35.0	3.50

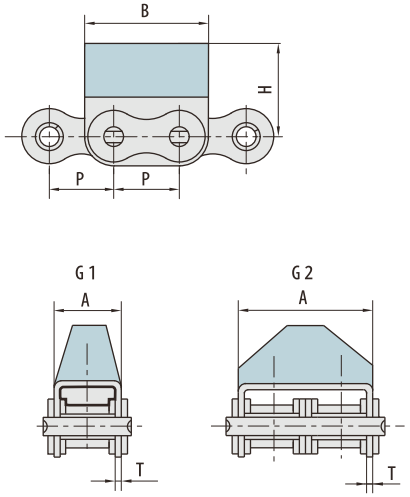

RBL chain number	P mm	A mm	B mm	H mm	T mm
10B-G2F1	15.875	33.3	30.0	17.0	1.5
24A-G1F1	38.100	55.5	70.0	46.5	4.8

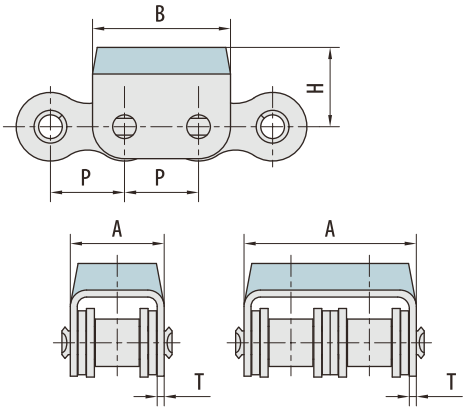

RBL chain number	P mm	A mm	B mm	H mm	T mm
12B-G2F6	19.05	39.1	37.3	28.2	1.85

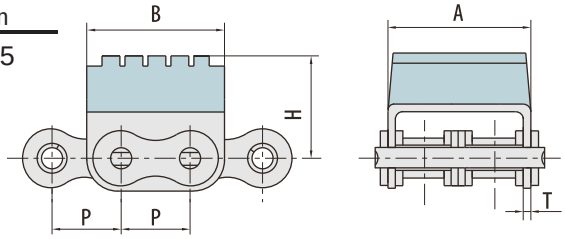

RBL chain number	P mm	A mm	B mm	G mm	h mm	H mm	T mm
16A-G2F1	25.4	27.0	49.2	45.4	25.0	20.0	2.03

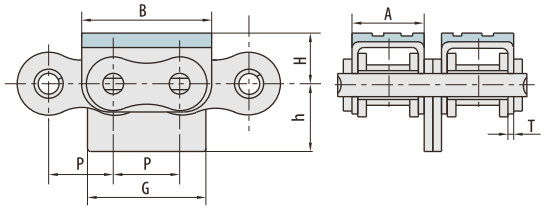

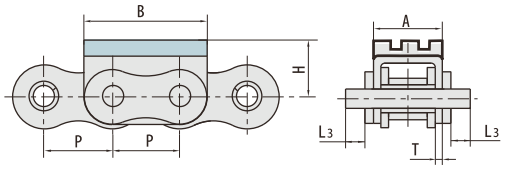

RBL chain number	P mm	A mm	B mm	H mm	H1 mm	T mm
16A-G1F3	25.4	27.5	49.0	8.25	21.4	2.42

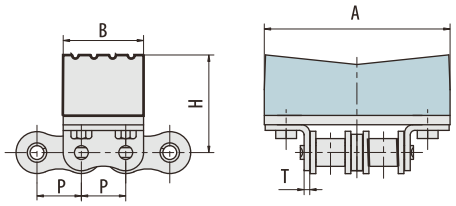

RBL chain number	P mm	A mm	B mm	H mm	T mm
12AW K2-G2F1	19.05	80.0	35.0	41.9	2.42

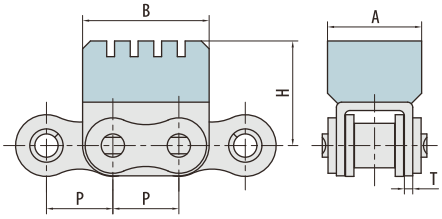

RBL chain number	P mm	A mm	B mm	H mm	T mm
08B-G1F15	12.70	18.00	24.20	20.00	1.60

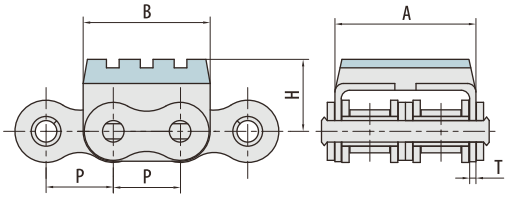

RBL chain number	P mm	A mm	B mm	H mm	T mm
10B-G2F6	15.875	33.30	30.00	17.00	1.50

RBL chain number	p mm	A mm	B mm	G mm	T mm
08BG2F18	12.70	28.40	24.20	14.30	1.50

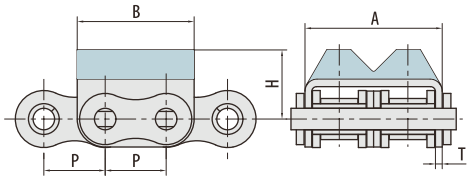

RBL chain number	p mm	A mm	B mm	G mm	T mm
08BG2F11	12.70	28.4	24.2	18.3	1.50
12BG1F1	19.05	19.6	36.0	18.0	1.85
12BG2F4	19.05	39.1	36.0	27.5	1.85
12BG1F13	19.05	19.6	36.0	21.0	1.85
12BG2F13	19.05	39.1	36.0	27.5	1.85

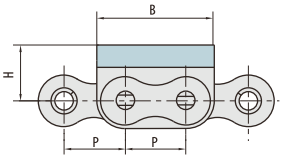

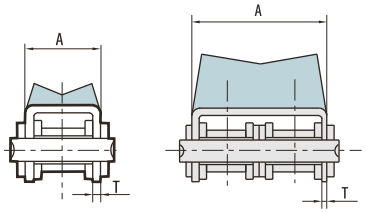

RBL chain number	p mm	A mm	B mm	G mm	T mm
12AG1F1	19.05	13.0	35.5	16.6	2.42

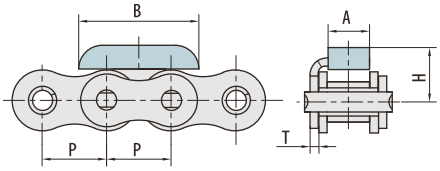

RBL chain number	p mm	A mm	B mm	H mm	h2 mm	T mm
16BG1F7	25.40	31.00	19.10	20.00	21.00	3.10
08BG1F16	12.70	12.85	23.30	11.40	11.80	1.30

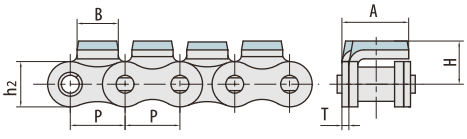

RBL chain number	p mm	B mm	H mm	h4 mm	T mm
06BF9	9.525	17.73	9.0	9.05	1.3

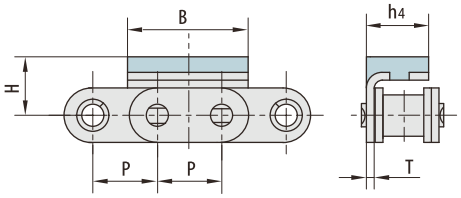

RBL chain number	p mm	A mm	B mm	H mm	T mm
12BG2F3	19.05	77	37	36	1.85
12BG2F8	19.05	101.00	37.00	36.00	1.85

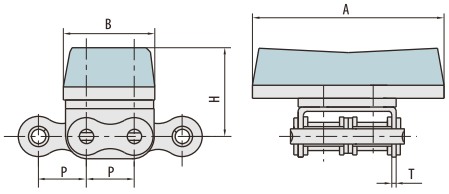

RBL chain number	p mm	A mm	B mm	H mm	H1 mm	T mm
08BG2F14	12.7	37.9	24.2	18.3	22.0	1.5

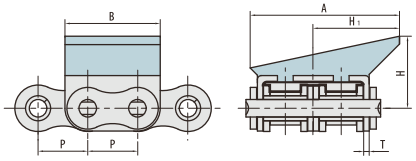

RBL chain number	p mm	A mm	B mm	H mm	H1 mm	T mm
08BG2F16	12.70	44.00	24.20	26.30	8.00	1.50
08BG2F17	12.70	39.00	24.20	21.30	8.00	1.50

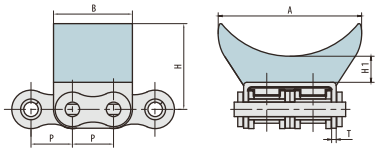

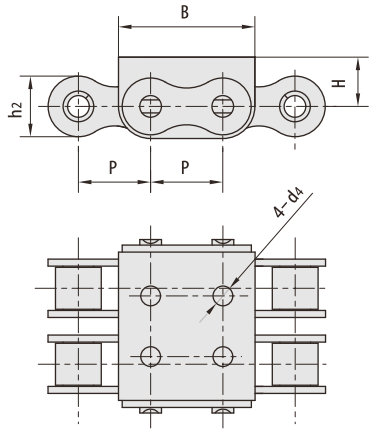

With U1 profile

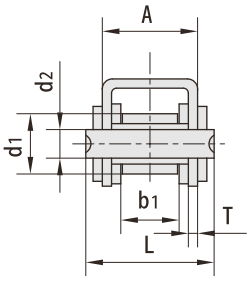

With U2 profile

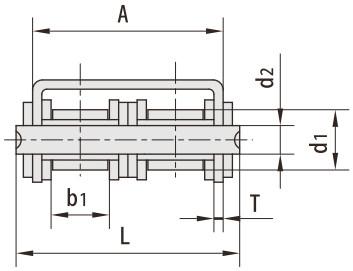

RBL chain number	Pitch P mm	Roller diameter d1 max mm	Width between b1 min mm	Pin diameter d2 max mm	Pin length L max mm	Plate & attachment dimension Lc max mm	A mm	B mm	H mm	d4 mm	T max mm	Tensile strength Q min Kn/LBS	Weight q kg/m
08BU1	12.700	8.51	7.75	4.45	20.00	11.80	14.60	24.2	8.3	-	1.60	18.0/4091	1.13
08BU2	12.700	8.51	7.75	4.45	34.30	11.80	28.40	24.2	8.3	-	1.50	32.0/7273	1.96
08BU2F9	12.700	8.51	7.75	4.45	47.90	11.80	28.40	25.5	8.3	4.0	1.50	29.0/6519	2.00
10AU1	15.875	10.16	9.40	5.08	24.50	15.09	17.50	31.0	11.3	5.0	1.60	21.8/4901	1.68
10AU1F3	15.875	10.16	9.40	5.08	24.50	15.09	17.50	31.0	11.3	-	1.60	21.84901	1.68
10BU1	15.875	10.16	9.65	5.08	23.20	14.70	16.80	30.0	11.3	5.0	1.6	19.0/4318	1.53
10BU2	15.875	10.16	9.65	5.08	39.70	14.70	33.30	30.0	11.3	5.0	1.50	44.5/10004	2.47
10BU1F7	15.875	10.16	9.65	5.08	23.20	14.70	16.80	30.0	10.3	-	1.60	22.24990	1.53
10BU1F8	15.875	10.16	9.65	5.08	23.20	14.70	16.80	30.0	11.3	-	1.60	19.0/4318	1.52
10BU2F2	15.875	10.16	9.65	5.08	39.70	14.70	33.30	30.0	11.3	-	1.50	44.5/10004	2.40
12AU2F3	19.050	11.91	12.57	5.94	52.90	18.00	44.50	37.1	13.0	-	1.85	62.3/14005	2.97
12BU1	19.050	12.07	11.68	5.72	25.70	16.00	19.60	36.0	13.0	5.0	1.85	29.0/6519	1.90
12BU2	19.050	12.07	11.68	5.72	45.30	16.00	39.10	36.0	12.0	5.0	1.85	57.8/13136	3.03
16AU1	25.400	15.88	15.75	7.92	37.20	24.00	27.50	46.0	16.0	-	2.42	56.7/12746	3.87
16BU1	25.400	15.88	17.02	8.28	39.70	21.00	29.05	49.0	15.4	6.0	1.60	58.0/13407	3.73
16BU2	25.400	15.88	17.02	8.28	71.70	21.00	60.93	49.0	16.2	-	1.60	106.0/26094	6.15
16BU2F4	25.400	15.88	17.02	8.28	71.70	21.00	60.93	49.0	16.2	8.4	1.60	106.0/26094	6.64
16BU2F8	25.400	15.88	17.02	8.28	75.50	21.00	64.73	49.0	16.5	-	3.50	106.0/23829	7.27
16BU2F10	25.400	15.88	17.02	8.28	75.20	21.00	64.10	49.0	16.2	M8	3.10	106.0/23829	7.86
20BF2	31.750	19.05	19.56	10.19	48.00	26.40	36.00	57.0	21.0	8.0	3.50	85.0/19318	6.01
20BU1	31.750	19.05	19.56	10.19	48.00	26.40	36.00	57.0	21.0	-	3.50	85.0/19318	6.00
24BU1	38.100	25.40	25.40	14.63	61.60	33.20	47.00	72.6	28.0	10.0	4.50	160.0/35969	10.88
24BU1F4	38.100	25.40	25.40	14.63	61.60	33.20	47.00	72.6	28.0	-	4.50	160.0/35969	11.40

Note: the number and position of d4 hole is as per drawing.

RBL chain number	p mm	A mm	B mm	d4 mm	H mm	T mm
08BU1F1 (a)	12.700	14.6	24.2	M 4	9.50	1.60
10BU1F1 (a)	15.875	16.8	30.0	M 5	11.30	1.60
12BU1F10	19.050	19.6	36.0	M 5	13.00	1.85
16AU1F7	25.400	27.3	49.5	M 6	16.45	2.30
16BU1F3	25.400	30.3	49.5	M 6	16.45	2.30
16BU1F4	25.400	29.8	47.8	M 5	15.00	2.00
20BU1F3	31.750	36.0	57.0	M 6	21.00	3.50
24BU1F5	38.100	47.0	72.6	M 6	28.00	4.50

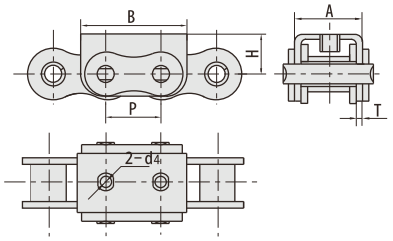

RBL chain number	p mm	A mm	B mm	C mm	d4 mm	H mm	T mm
08BU2F2	12.700	28.4	24.2	17.5	3.3	8.3	1.50
10AU2F1	15.875	36.5	29.0	17.5	3.3	12.0	2.03
10BU2F3	15.875	33.3	30.0	16.5	4.0	11.3	1.50
12BU2F7	19.050	38.9	36.0	17.5	3.3	13.2	1.85

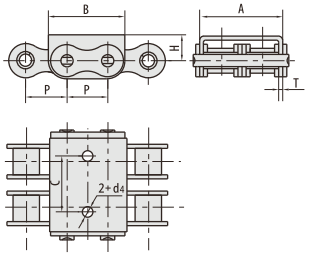

RBL chain number	p mm	A mm	B mm	C mm	d4 mm	E mm	H mm	T mm
16BU2F1	25.4	60.93	25.0	33.5	9.0	49.0	16.2	1.6
16BU2F5	25.4	64.10	25.0	-	-	46.4	17.0	3.1
16BU1F10	25.4	29.05	25.0	-	6.0	49.0	15.4	1.6

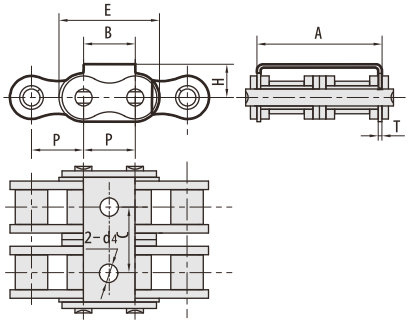

RBL chain number	p mm	A mm	B mm	d4 mm	H mm	T mm	C mm	d1 mm
16BU2F2	25.4	60.93	49.0	M6	18.2	1.6	33.5	10.0
16BU2F3	25.4	60.93	49.0	M6	16.2	1.6	33.5	10.0

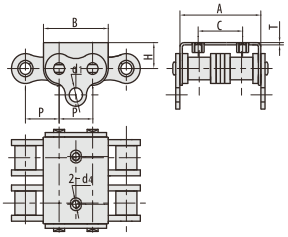

RBL chain number	p mm	B mm	H mm	H1 mm	C mm	L mm
16AU2F8	25.4	45.9	17.0	20.0	41.0	10.0

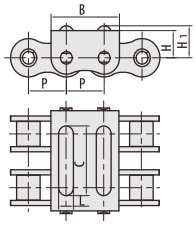

RBL chain number	p mm	A mm	B mm	d4 mm	H mm	T mm
16AU2F9	25.4	27.5	49.0	M6	16.0	2.42

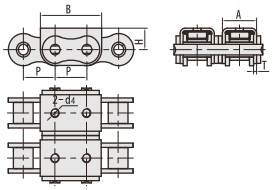

RBL chain number	p mm	A mm	B mm	C mm	d4 mm	H mm	T mm
16BU2F7	25.4	62.76	49.0	33.5	M6	19.5	2.50
16BU2F10	25.4	64.10	49.0	35.0	M8	16.2	3.10

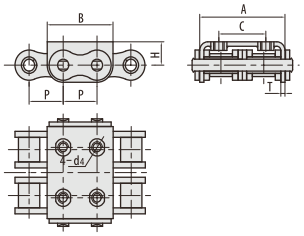

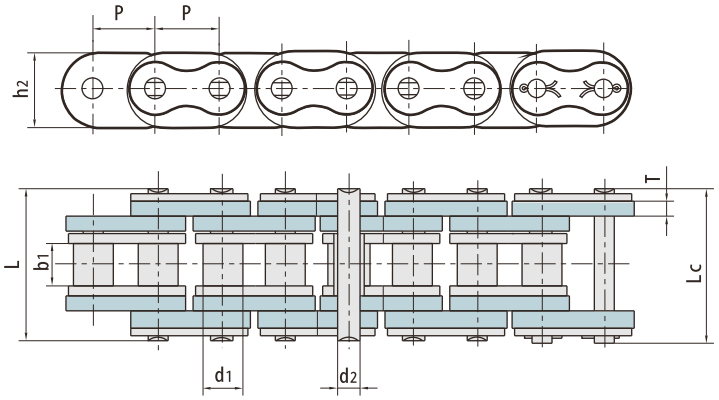

RBL chain number	Pitch P mm	Roller diameter d1 max mm	Width between b1 min mm	Pin diameter d2 max mm	Pin length L max mm	Pin length Lc max mm	Plate & attachment dimension h2 mm	Plate & attachment dimension T mm	Tensile strength Q min Kn/LBS	Weight q kg/m
16BF9	25.4	15.88	17.02	8.28	61.0	64.2	30.0	6.0	22.04949	3.7

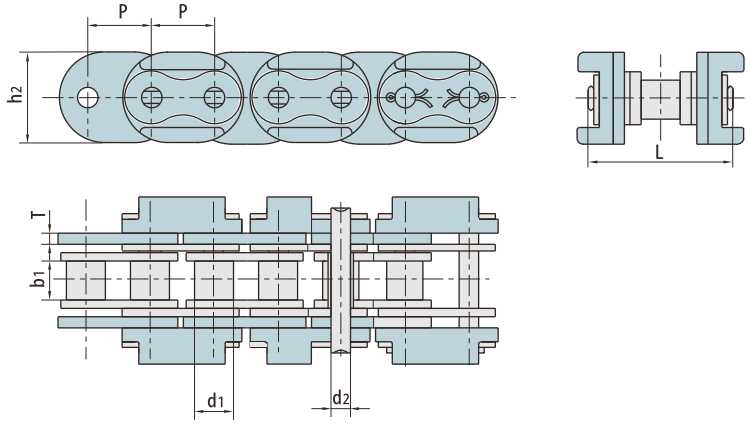

RBL chain number	Pitch P mm	Roller diameter d1 max mm	Width between b1 min mm	Pin diameter d2 max mm	Pin length L max mm	Plate & attachment dimension h2 mm	Plate & attachment dimension T mm	Tensile strength Q min Kn/LBS	Weight q kg/m
20BF6	31.75	19.05	19.56	10.19	73.7	45.0	6.0	95.0/21591	6.35

Engineering plastic inner light-duty conveyor chains

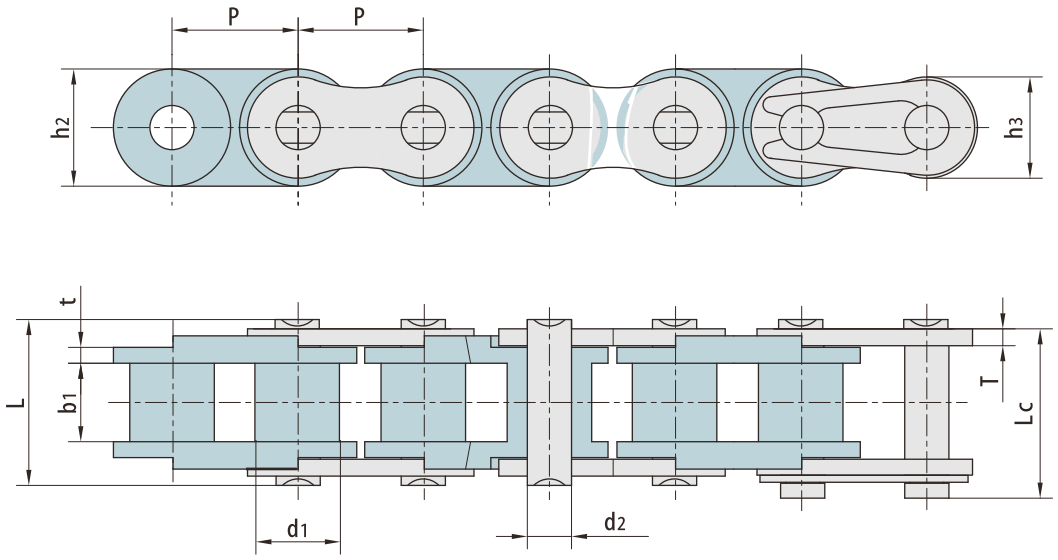

RBL chain number	Pitch	Roller diameter	Width between inner plates	Pin diameter	Pin length		plate depth		Plate thickness	Tensile strength
	P mm	d1 max mm	b1 min mm	d2 max mm	L max mm	Lc max mm	h2 max mm	h3 max mm	t/T mm	Q min kN/LBF
04CPSa	6.350	3.30	3.10	2.31	7.9	8.4	6.0	5.06	0.80	0.6/l36
06CPSa	9.525	5.08	4.68	3.58	12.4	13.2	9.0	7.80	1.30	1.1/250
08APSa	12.700	7.92	7.85	3.96	16.6	17.8	12.0	10.40	1.50	2.5/568
10APSa	15.875	10.16	9.40	5.08	20.7	22.2	15.1	13.00	2.03	3.5/795
12APSa	19.050	11.91	12.57	5.94	25.9	27.7	18.0	15.60	2.42	4.5/l023
16APSa	25.400	15.88	15.75	7.92	32.7	35.0	24.0	20.50	3.25	7.5/l686
08BPSa	12.700	8.51	7.75	4.45	16.7	18.2	11.8	10.60	1.60	2.5/568
10BPSa	15.875	10.16	9.65	5.08	19.5	20.9	14.7	13.70	1.70	2.8/629
12BPSa	19.050	12.07	11.68	5.72	22.5	24.2	16.0	15.00	1.85	4.2/1023
16BPSa	25.400	15.88	17.02	8.28	36.1	37.4	21.0	21.00	4.15/3.10	7.5/1686

Engineering plastic inner light-duty conveyor chains

D 1

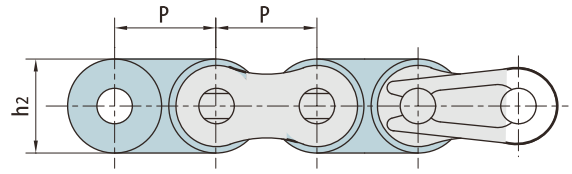

D 3

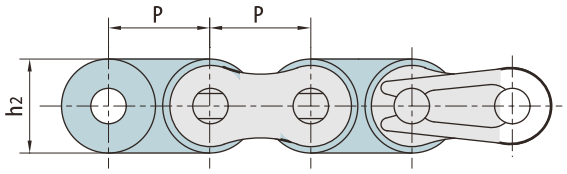

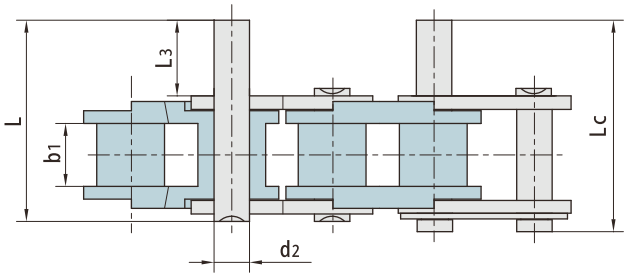

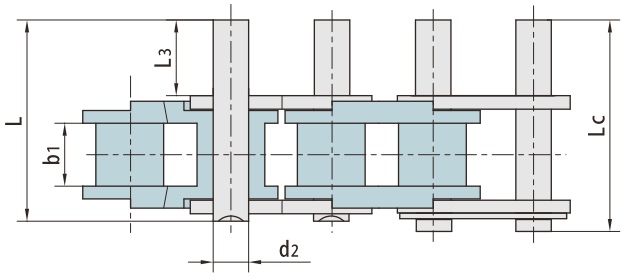

RBL chain number	p mm	b1 mm	d2 mm	h2 mm	L3 mm	L mm	Lc mm
06CPSa	9.525	4.68	3.58	9.0	9.5	20.8	21.6
08APSa	12.700	7.85	3.96	12.0	9.5	25.1	26.2
10APSa	15.875	9.40	5.08	15.1	11.9	31.3	33.1
12APSa	19.050	12.57	5.94	18.0	14.3	38.6	40.6
16APSa	25.400	15.75	7.92	24.0	19.1	50.3	53.3
08BPSa	12.700	7.75	4.45	11.8	9.5	25.1	26.6
10BPSa	15.875	9.65	5.08	14.7	11.9	30.1	31.5
12BPSa	19.050	11.68	5.72	16.0	14.3	35.4	37.1
16BPSa	25.400	17.02	8.28	21.0	19.1	53.0	54.3

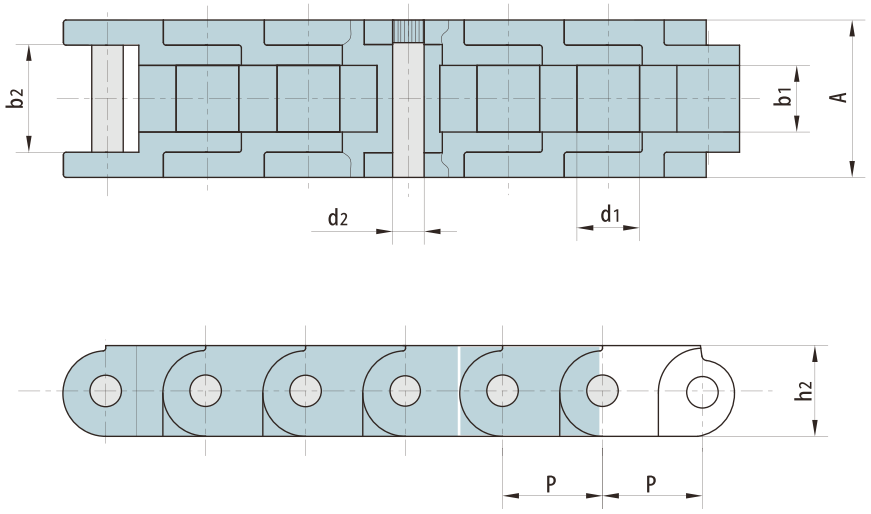

RBL chain number	p mm	b1 mm	b2 mm	d2 mm	d1 mm	A mm	h2 mm	Max load kN/LBF
PD60	19.05	12.7	20.7	6	11.94	30	17.3	0.88/198

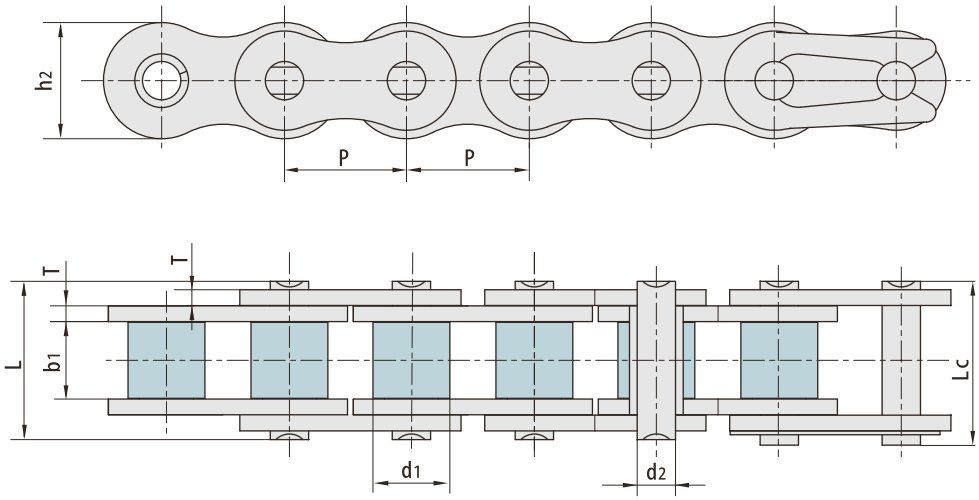

RBL chain number	Pitch	Roller diameter	Width between inner plates	Pin diameter	Pin length		inner plate depth	Plate thickness	Tensile strength	Average Tensile strength	Weight
	P mm	d1 max mm	b1 min mm	d2 max mm	L max mm	Lc max mm	h2 max mm	T mm	Q min kN/LBF	Qo kN	q kg/m
40P	12.700	7.95	7.85	3.96	16.60	17.80	12.00	1.50	14.1/3205	17.5	0.56
50P	15.875	10.16	9.40	5.08	20.70	22.20	15.09	2.03	22.2/5045	29.4	0.96
60P	19.050	11.91	12.57	5.94	25.90	27.70	18.00	2.42	31.8/7227	41.5	1.35
80P	$25.400	15.88	15.75	7.92	32.70	35.00	24.00	3.25	56.7/12886	69.4	2.26
A2050P	31.750	10.16	9.40	5.08	20.70	22.20	15.00	2.03	22.2/5045	28.1	0.61

1. Without rollers

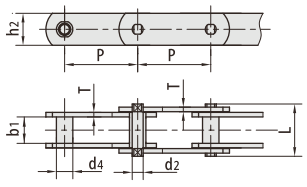

2. With S small rollers

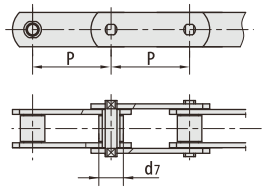

3. With P large rollers

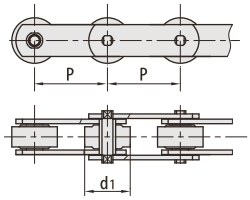

4. With F flanged rollers

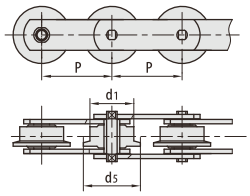

5. Welded pins with plates

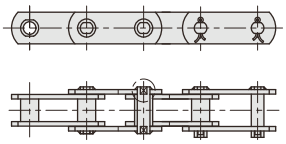



RBL chain number	Pitch P								Roller diameter			Bush diameter
	mm	mm	mm	mm	mm	mm	mm	mm	d1 max mm	d7 max mm	d5 max mm	d4 max mm
M20	*40.0	50.0	63.0	80.0	100.0	125.0	160.0		25.0	12.5	32.0	9.0
M28	*50.0	63.0	80.0	100.0	125.0	160.0	200.0		30.0	15.0	36.0	10.0
M40	63.0	80.0	100.0	125.0	160.0	200.0	250.0		36.0	18.0	42.0	12.5
M56	*63.0	80.0	100.0	125.0	160.0	200.0	250.0		42.0	21.0	50.0	15.0
M80	80.0	100.0	125.0	160.0	200.0	250.0	315.0		50.0	25.0	60.0	18.0
M112	*80.0	100.0	125.0	160.0	200.0	250.0	315.0	400.0	60.0	30.0	70.0	21.0
M160	*100.0	125.0	160.0	200.0	250.0	315.0	400.0	500.0	70.0	36.0	85.0	25.0
M224	*125.0	160.0	200.0	250.0	315.0	400.0	500.0	630.0	85.0	42.0	100.0	30.0
M315	*160.0	200.0	250.0	315.0	400.0	500.0	630.0		100.0	50.0	120.0	36.0
M450	200.0	250.0	315.0	400.0	500.0	630.0	800.0		120.0	60.0	140.0	42.0

RBL chain number	Width between inner plates b1 min mm	Pin diameter d2 max mm	Pin length L max mm	plate depth h2 max mm	Plate thickness T max mm	Tensile strength Q min kN/LBF	Average Tensile strength Qo kN
M20	16.0	6.0	35.0	19.0	2.5	20.0/4545	25.0
M28	18.0	7.0	40.0	21.0	3.0	28.0/6364	35.0
M40	20.0	8.5	45.0	26.0	3.5	40.0/9091	50.0
M56	24.0	10.0	52.0	31.0	4.0	56.0/I2727	70.0
M80	28.0	12.0	62.0	36.0	5.0	80.0/18182	100.0
M112	32.0	15.0	73.0	41.0	6.0	112.0/25454	140.0
M160	37.0	18.0	85.0	51.0	7.0	160.0/36364	200.0
M224	43.0	21.0	98.0	62.0	8.0	224.0/50909	280.0
M315	48.0	25.0	112.0	72.0	10.0	315.0/71591	393.7
M450	56.0	30.0	135.0	82.0	12.0	450.0/102272	562.5

* chain has bush and small roller only

1. Without rollers

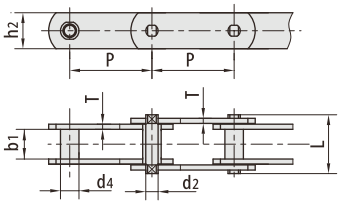

2. With S small rollers

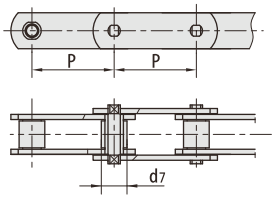

3. With P large rollers

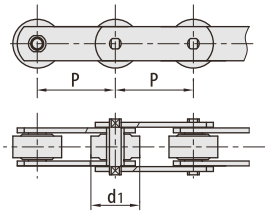

4. With F flanged rollers

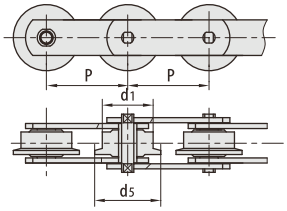

5. Welded pins with plates

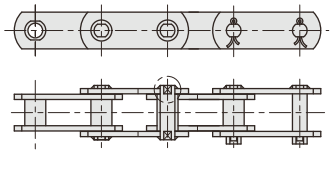



RBL chain number	pitch p							Roller diameter			Bush diameter
	mm	mm	mm	mm	mm	mm	mm	d1 max mm	d7 max mm	d5 max mm	d4 max mm
M20	40.0	50.0	63.0	80.0	100.0	125.0	160.0	25.0	12.50	30.00	9.0
M28	50.0	63.0	80.0	100.0	125.0	160.0	200.0	30.0	15.00	36.00	10.0
M40	63.0	80.0	100.0	125.0	160.0	200.0	250.0	36.0	18.00	42.00	12.5
M56	63.0	80.0	100.0	125.0	160.0	200.0	250.0	42.0	21.00	50.00	15.0
M80	80.0	100.0	125.0	160.0	200.0	250.0	315.0	50.0	25.00	60.00	18.0
M112	80.0	100.0	125.0	160.0	200.0	250.0	315.0	60.0	30.00	70.00	21.0
M160	100.0	125.0	160.0	200.0	250.0	315.0	400.0	70.0	36.00	85.00	25.0
M224	125.0	160.0	200.0	250.0	315.0	400.0	500.0	85.0	42.00	100.00	30.0
M315	160.0	200.0	250.0	315.0	400.0	500.0	630.0	100.0	50.00	120.00	36.0
M450	200.0	250.0	315.0	400.0	500.0	630.0	800.0	120.0	60.00	140.00	42.0

RBL chain number	Width between inner plates b1 min mm	Pin diameter d2 max mm	Pin length L max mm	plate depth h2 max mm	Plate thickness T max mm	Tensile strength Q min kN/LBF	Average Tensile strength Qo kN
M20	16.0	6.0	35.0	18.0	2.5	20.0/4545	25.0
M28	18.0	7.0	40.0	20.0	3.0	28.0/6364	35.0
M40	20.0	8.5	45.0	25.0	3.5	40.0/9091	50.0
M56	24.0	10.0	52.0	30.0	4.0	56.0/12727	70.0
M80	28.0	12.0	62.0	35.0	5.0	80.0/18182	100.0
M112	32.0	15.0	73.0	40.0	6.0	112.0/25454	140.0
M160	37.0	18.0	85.0	50.0	7.0	160.0/36364	200.0
M224	43.0	21.0	98.0	60.0	8.0	224.0/50909	280.0
M315	48.0	25.0	112.0	70.0	10.0	315.0/71591	393.7
M450	56.0	30.0	135.0	80.0	12.0	450.0/102272	562.5

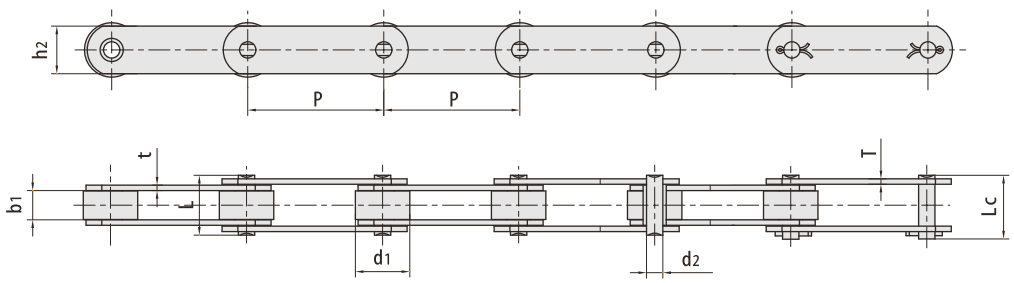

RBL chain number	Pitch	Roller diameter	Width between inner plates	Pin diameter	Pin length		inner plate depth	Plate thickness	Tensile strength	Average Tensile strength	Weight
	P mm	d1 max mm	b1 min mm	d2 max mm	L max mm	Lc max mm	h2 max mm	t/T mm	Q min kN/LBF	Qo kN	q kg/m
M18F1P50	50.0	25.00	11.50	5.72	26.0	28.2	18.0	2.5	18.04050	20.0	1.81
M20PFl50	50.0	30.00	16.00	6.00	31.0	33.5	18.0	2.5	20.04500	22.0	2.60
M22P50	50.0	25.00	11.50	8.00	28.0	30.9	20.0	3.0	22.04950	24.2	2.64
M22F1P50	50.0	25.00	12.00	10.00	29.4	32.6	20.0	3.0	22.04950	24.2	2.30
M28F4S50	50.0	15.00	17.00	7.00	33.0	36.5	20.0	3.0	28.04300	35.0	1.88
M28F5P63	63.0	30.00	18.00	7.00	42.0	45.5	25.0	5.0	40.04000	50.0	4.23
M28F8P80	80.0	25.00	16.00	7.00	33.0	36.2	20.0	3.0	28.04294	31.0	1.89
M35F2S35	35.0	14.00	14.00	7.00	31.0	34.0	18.0	3.54.5	35.0/7874	39.0	1.82
M35F2P35	35.0	22.00	14.00	7.00	31.0	34.0	18.0	3.5/2.5	35.0/7874	39.0	2.47
35F3B35	35.0	14.00	14.00	6.00	30.2	33.0	18.0	3.0	35.0/7874	39.0	1.73
M35F4C69	69.0	25.00	12.00	7.00	27.5	30.0	19.0	2.5	35.0/7874	39.0	1.60
M35F5P50.8	50.8	25.00	16.00	7.00	33.0	36.0	20.0	3.0	35.0/7874	39.0	2.48
M35F9P50	50.0	25.00	16.00	6.00	30.4	32.7	18.0	2.5	33.0/7425	36.0	2.23
M35F10P50	50.0	20.00	16.00	7.00	33.0	36.0	25.0	3.0	35.0/7874	39.0	2.53
M35F11P35	35.0	20.00	16.00	7.00	31.0	34.0	18.0	2.5	35.0/7874	39.0	2.22
M40PFl100	100.0	36.00	20.00	8.50	40.5	44.5	25.0	3.5	40.04000	44.0	3.28
M40F4P50	50.0	31.75	15.00	10.00	36.6	39.0	25.0	4.0	40.04000	44.0	4.00
M40F5S65	65.0	24.00	15.00	10.00	36.6	39.0	30.0	4.0	40.04000	44.0	4.86
M40F6P80	80.0	36.00	20.00	8.50	41.0	44.2	25.0	4.0	40.04000	44.0	3.68
M40F17P50.8	50.8	31.00	15.20	13.35	38.0	42.8	25.0	5.04.0	53.9/12127	59.2	4.45
M40F22P100	100.0	40.00	32.00	14.00	63.7	69.0	50.0	6.0	195.043838	214.5	10.30
M565Fl63	63.0	25.00	24.00	10.00	46.0	49.5	30.0	4.0	56.0/12600	61.6	2.31
M56PF180	80.0	25.00	24.00	10.00	46.0	49.5	30.0	4.0	56.0/12600	61.6	3.61
M56SFl80	80.0	50.00	24.00	10.00	46.0	49.5	30.0	4.0	56.0/12600	61.6	6.96
M56F14S63	63.0	21.00	24.00	10.00	46.0	49.6	30.0	4.0	56.0/12600	61.6	3.81
M56F14S80	80.0	21.00	24.00	10.00	46.0	49.7	30.0	4.0	56.0/12600	61.6	3.27
M56F14P100	100.0	42.00	24.00	10.00	46.0	49.5	30.0	4.0	56.0/12600	61.6	5.00
M56F21P100	100.0	42.00	24.00	12.00	54.7	59.5	30.0	6.0	56.0/12600	61.6	6.30
M56F28P100	100.0	31.00	15.00	10.00	38.2	43.0	30.0	4.0	56.0/12600	61.6	3.20

*Bush chain: d1 in the table indicates the external diameter of the bush.

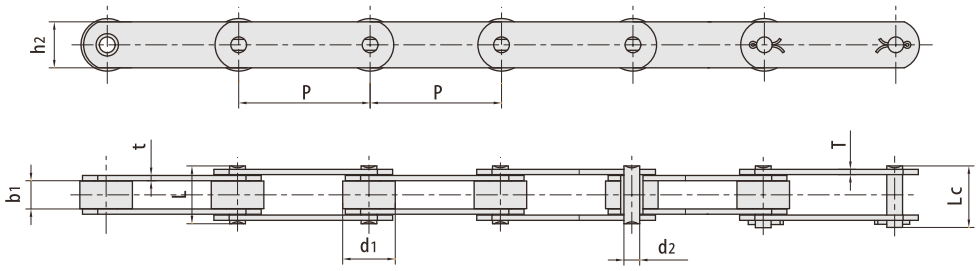

RBL chain number	Pitch	Roller diameter	Width between inner plates	Pin diameter	Pin length		inner plate depth	Plate thickness	Tensile strength	Average Tensile strength	Weight
	P mm	d1 max mm	b1 min mm	d2 max mm	L max mm	Lc max mm	h2 max mm	t/T mm	Q min kN/LBF	Qo kN	q kg/m
M75P75	75.0	40.00	22.00	12.00	44.0	47.0	35.0	4.0	75.0/l6870	75.0	5.88
M80F3P125	125.0	50.00	28.00	11.00	55.0	58.5	35.0	5.0	80.0/18000	88.0	6.72
*M80F4BFl125	125.0	25.00	28.00	12.00	55.0	58.5	35.0	5.0	80.0/l8000	88.0	4.27
M80F4A100	100.0	25.00	28.00	12.00	55.0	58.5	35.0	5.0	80.0/18000	88.0	4.63
*M80F4B100	100.0	18.00	28.00	12.00	55.0	58.5	35.0	5.0	80.0/18000	88.0	4.13
*M80F4B125	125.0	18.00	28.00	12.00	55.0	58.5	35.0	5.0	80.0/18000	88.0	3.85
M80F6P75	75.0	35.00	14.00	12.00	40.5	45.0	30.0	5.0	80.0/18000	88.0	4.80
M80F8S80	80.0	25.00	28.00	12.00	55.0	58.5	35.0	5.0	80.0/18000	88.0	5.11
*M80F8B80	80.0	18.00	28.00	12.00	55.0	58.5	35.0	5.0	80.0/18000	88.0	4.48
*M80F8B100	100.0	18.00	28.00	12.00	55.0	58.5	35.0	5.0	80.0/18000	88.0	4.14
*M80F8B125	125.0	18.00	28.00	12.00	55.0	58.5	35.0	5.0	80.0/18000	88.0	3.85
M80F9S80	80.0	25.00	28.00	12.00	54.5	59.0	35.0	5.0	80.0/18000	88.0	5.07
M80F12P100	100.0	50.00	28.00	12.00	55.0	58.5	35.0	5.0	80.0/18000	88.0	7.80
M80F30S100	100.0	25.00	28.00	12.00	55.0	58.5	40.0	5.0	80.0/18000	88.0	7.51
*M80F31B100	100.0	18.00	28.00	12.00	61.0	67.0	35.0	5.0/8.0	80.0/18000	88.0	10.40
M100P80	80.0	47.50	31.40	15.90	71.2	76.0	40.0	8.0	100.0/22727	110.0	12.36
*M112F61B80	80.0	21.00	32.00	15.00	64.5	69.0	40.0	6.0	112.0/25200	123.2	6.50
M112F2P125	125.0	55.00	50.00	16.00	87.1	91.6	40.0	7.2	112.0/25200	123.2	13.35
M224F3P160	160.0	80.00	30.00	21.00	81.0	-	60.0	8.0	224.0/50909	246.0	17.34
*M112F6B100	100.0	21.00									6.14
*M112F6B125	125.0	21.00	32.00	15.00	64.0	68.3	40.0	6.0	112.0/25200	123.2	5.46
M112F6P125	125.0	60.00									10.33
M112F7P125	125.0	30.00	32.00	15.00	64.0	68.3	40.0	6.0	112.0/25200	123.2	6.39
M112F8S100	100.0	30.00	31.00	15.00	63.5	68.0	40.0	6.0	112.0/25200	123.2	7.14
*M112F14	160.0	21.00	31.00	14.00	64.4	69.0	40.0	6.0	112.0/25200	123.2	5.03
M112F15B100	100.0	21.00	31.00	15.00	64.5	69.0	40.0	6.0	112.0/25201	123.2	5.90
M112F18S100	100.0	30.00	31.00	15.00	64.0	68.6	36.0	6.0	112.0/25202	123.2	6.20
M112F33P100	100.0	60.00	32.00	15.00	72.5	77.0	40.0	8.0	112.0/25200	123.2	14.10
*M112F49B100	100.0	21.00	32.00	15.00	73.0	77.5	40.0	6.0/l0.0	112.0/25200	123.2	8.20
*M112F18B125	125.0	21.00	31.00	15.00	-	68.6	36.0	6.0	112.0/25200	123.2	5.25
*M112F60B125	125.0	21.00	32.00	15.00	64.5	69.0	40.0	6.0	112.0/25200	123.2	5.60

*Bush chain: d1 in the table indicates the external diameter of the bush.

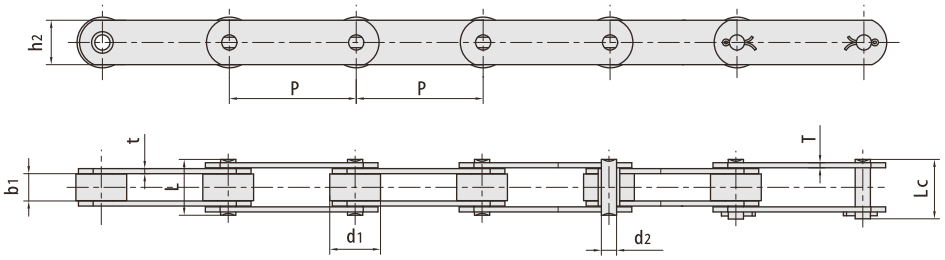

RBL chain number	Pitch	Roller diameter	Width between inner plates	Pin diameter	Pin length		inner plate depth	Plate thickness	Tensile strength	Average Tensile strength	Weight
	P mm	d1 max mm	b1 min mm	d2 max mm	L max mm	Lc max mm	h2 max mm	t/T mm	Q min kN/LBF	Qo kN	q kg/m
M1125150	150.0	30.0	32.0	15.0	-	69.0	40.0	6.0	160.0/36364	176.0	6.05
M112F21P160	160.0	40.0	25.0	15.0	57.5	62.0	40.0	6.0	112.0/25200	123.2	6.86
M112F24S100	100.0	30.0	32.0	15.0	-	73.2	36.0	6.0	112.0/25200	123.2	6.82
M112PF180	80.0	40.0	32.0	15.0	64.5	69.0	40.0	6.0	112.0/25200	123.2	10.97
112F27B160	160.0	21.0	31.0	14.0	69.4	74.0	40.0	6.0/6.0	112.0/25200	123.2	5.80
*M112F47B160	160.0	21.0	32.0	15.0	72.5	77.0	40.0	8.0	160.0/36364	176.0	7.00
M160F1P100	100.0	36.0	36.0	18.0	76.0	80.0	40.0	7.0	160.0/36364	176.0	9.42
160F14B100	100.0	25.0	37.0	18.0	77.3	83.5	50.0	8.0	160.0/36364	176.0	10.44
160F15B100	100.0	25.0	37.0	18.0	85.3	91.5	50.0	10.0	160.0/36364	176.0	12.51
*M160F41B100	100.0	25.0	37.5	18.0	73.3	79.5	50.0	7.0	160.0/36364	176.0	9.34
M160F23S160	160.0	36.0	37.0	18.0	73.3	79.5	50.0	7.0	160.0/36364	176.0	11.95
160F36B160	160.0	25.0	37.0	18.0	73.3	79.5	50.0	7.0	160.0/36364	176.0	7.86
M160F40P200	200.0	70.0	37.0	20.0	83.0	89.5	51.0	9.0	180.0/40492	198.0	14.50
*M224F30B125	125.0	30.0	42.0	21.0	-	92.5	56.0	8.0	224.0/50909	246.0	12.49
224F40B160	160.0	30.0	43.0	21.0	85.0	91.0	60.0	8.0	224.0/50909	246.0	11.20
224F52B160	160.0	30.0	43.0	21.0	93.0	99.0	60.0	10.0	224.0/50909	246.0	16.20
*M224F31B200	200.0	30.0	43.0	21.0	84.0	91.0	60.0	8.0	224.0/50909	246.0	10.05
M300F6P152.4	152.4	88.9	38.5	32.0	84.0	92.0	60.0	10.0/8.0	400.0/89990	500.0	23.10
M315F1B125	125.0	36.0	37.0	25.0	90.0	-	70.0	10.0	315.0/70862	346.0	19.15
M315S170	170.0	50.0	47.0	25.0	98.9	105.0	70.0	10.0	315.0/70862	346.5	19.83
M15F6B160	160.0	42.0	80.0	25.0	140.0	140.0	80.0	12.0	315.0/70862	346.5	27.30
M315F10S250	250.0	50.0	55.0	26.0	106.9	113.0	70.0	10.0	315.0/70862	393.7	17.60
M315F12S200	200.0	45.0	48.0	25.0	119.0	126.5	70.0	15.0	600.0/135000	648.0	24.20
M315F16S250	250.0	60.0	48.0	25.0	109.5	117.0	70.0	12.0	600.0/135001	648.0	21.60
M315F17B160	160.0	36.0	66.7	25.0	93.5	100.5	70.0	8.0	315.0/70861	346.5	15.04
M315F52S250	250.0	60.0	48.0	25.0	108.0	115.0	70.0	12.0	315.0/70862	346.5	21.30
M450F28S200	200.0	60.0	56.0	30.0	131.0	142.0	80.0	15.0	450.0/102272	562.5	36.50
*M630B250	250.0	50.0	65.0	36.0	140.0	150.0	103.0	14.0	630.0/14172	693.0	36.30

*Bush chain: d1 in the table indicates the external diameter of the bush.

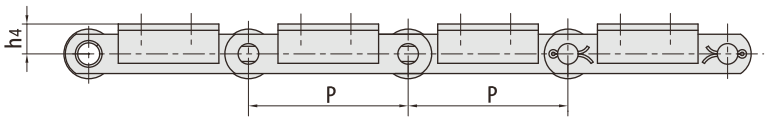

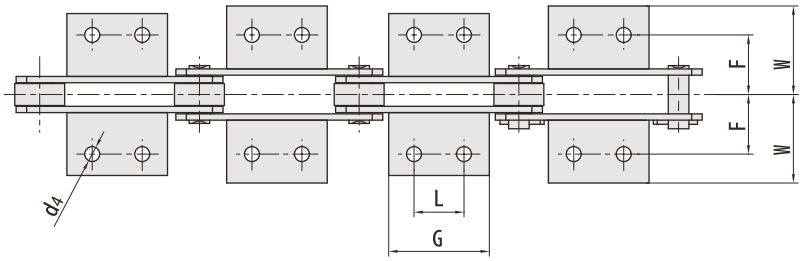

RBL chain number	P mm	L mm	G mm	d4 mm	F mm	W mm	h4 mm
M20	40.0	Δ	14.0	6.6	27.0	40.0	16.0
	50.0	Δ	14.0				
	63.0	20.0	35.0				
	80.0	35.0	50.0				
M28	50.0	Δ	20.0	9.0	32.0	47.0	20.0
	63.0	Δ	20.0				
	80.0	25.0	45.0				
	100.0	40.0	60.0				
M40	63.0	Δ	31.0	9.0	35.0	50.0	25.0
	80.0	20.0	45.0				
	100.0	40.0	60.0				
	125.0	65.0	85.0				
M56	63.0	Δ	22.0	11.0	44.0	61.0	30.0
	80.0	Δ	30.0				
	100.0	25.0	50.0				
	125.0	50.0	75.0				
	160.0	85.0	110.0				
M80	80.0	Δ	30.0	11.0	48.0	65.0	35.0
	100.0	25.0	50.0				
	125.0	50.0	75.0				
	160.0	85.0	110.0				
	200.0	125.0	150.0				

*Attachments with 1 hole.

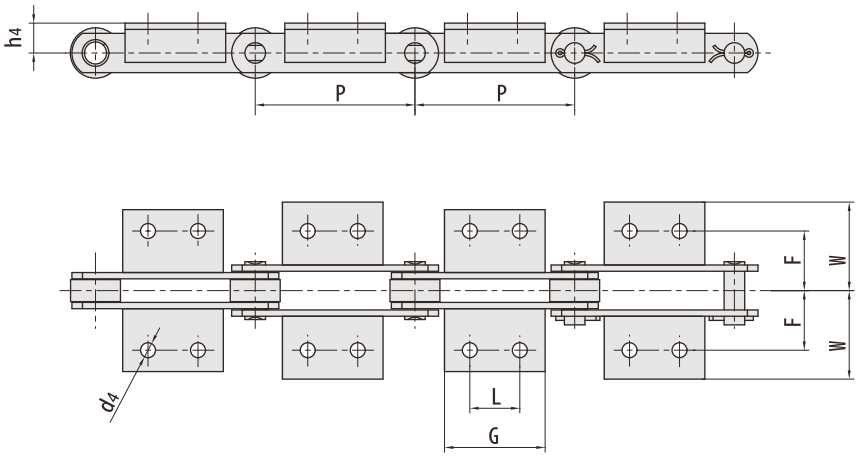

RBL chain number	P mm	L mm	G mm	d4 mm	F mm	W mm	h4 mm
M112	80.0	△	28.0	14.0	55.0	80.0	40.0
	100.0	△	40.0				
	125.0	35.0	65.0				
	160.0	65.0	95.0				
	200.0	100.0	130.0				
M160	100.0	△	30.0	14.0	62.0	85.0	45.0
	125.0	25.0	50.0				
	160.0	50.0	80.0				
	200.0	85.0	115.0				
	250.0	145.0	175.0				
M224	125.0	△	35.0	18.0	70.0	110.0	55.0
	160.0	△	60.0				
	200.0	65.0	100.0				
	250.0	125.0	160.0				
	315.0	190.0	230.0				
M315	160.0	△	35.0	18.0	80.0	115.0	65.0
	200.0	50.0	85.0				
	250.0	100.0	140.0				
	315.0	155.0	190.0				
	400.0	155.0	205.0				

*Attachments with 1 hole.

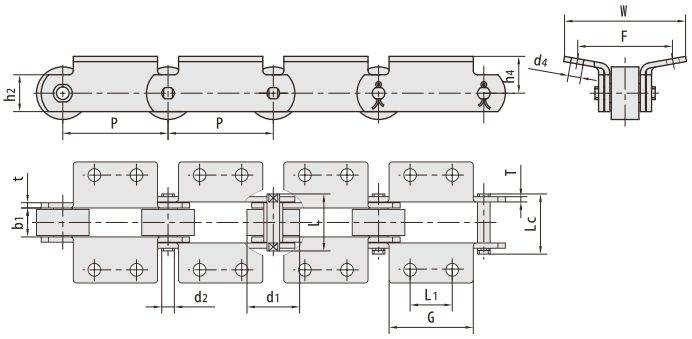

RBL chain number	L1 mm	G mm	F mm	W mm	h4 mm	d4 mm
M80K2F6P100	40.00	80.00	90.00	115.00	35.00	12.00
M112K2F4P200	120.00	180.00	110.00	142.00	46.00	14.00

RBL chain number	Pitch P mm	Roller diameter d1 max mm	Width between b1 min mm	Pin diameter d2 max mm	Pin length L max mm	Pin length Lc max mm	inner plate depth h2 max mm	Plate thickness t/T mm	Tensile strength Q min kN/LBF	Weight q kg/m
M80K2F6P100	100.00	50.00	27.00	12.00	55.0	58.5	35.00	5.00	80.0/17994	10.50
M112K2F4P200	200.00	60.00	38.50	15.00	71.7	75.6	40.00	5.00	160.0/35988	13.50

With K4 attchment

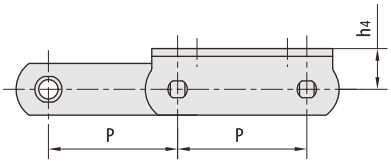

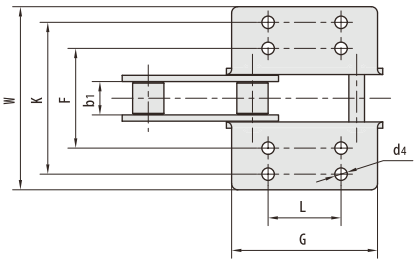

RBL chain number	p mm	b1 mm	h4 mm	F mm	K mm	W mm	L mm	G mm	d4 mm
M112K4-S-100	100.00	32.00	31.50	96.00	146.00	176.00	70.00	140.00	12.00

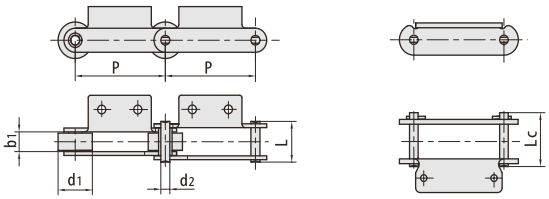

RBL chain number	Pitch	Roller diameter	Width between inner plates	Pin diameter	Pin length		Tensile strength	Average Tensile strength	Weight
	P mm	d1 max mm	b1 min mm	d2 max mm	L max mm	Lc max mm	Q min kN/LBF	Qo kN	q kg/m
M18F1A1P50	50.0	25.0	11.5	5.72	26.0	28.2	18.0/4050	20.0	2.46
M18F2A1.02P50	50.0	25.0	11.5	5.72	28.0	30.2	18.0/4050	20.0	2.18
M18F2A1F1.32P50	50.0	25.0	11.5	5.70	28.0	30.2	18.0/4050	20.0	1.85
M18F4A1.02S50	50.0	15.0	12.0	6.00	24.0	26.5	18.0/4050	20.0	1.20
M18F8K1.03P50	50.0	25.0	11.5	5.72	26.0	28.2	18.0A050	20.0	2.47
M20K1F2.02S50	50.0	12.5	16.0	6.00	31.0	33.5	20.0/4545	25.0	3.60
M20A2F1S50	50.0	12.5	16.0	6.00	31.0	33.5	20.0/4545	25.0	1.53
M28F1A2P80	80.0	29.4	18.0	7.00	35.4	38.7	28.0/6300	31.0	2.60
M28F3A2P63	63.0	30.0	17.0	7.00	37.3	40.3	35.0/7874	39.0	3.48
M28F3A2F100	100.0	30.0	17.0	7.00	37.3	40.3	35.0/7874	39.0	3.46
M32A1.02P50	50.0	31.0	15.0	10.00	33.0	35.5	32.0/7200	35.2	4.09
M32A1F1P50	50.0	31.0	15.0	10.00	33.0	35.5	32.0/7200	35.2	3.96
M32A1F2.02PF150	50.0	36.0	14.8	10.00	32.6	35.5	35.0/7874	39.0	4.40
M35F4A1.01C69	69.0	25.0	12.0	7.00	27.5	30.0	35.0/7874	39.0	2.26
M40FA1.02P50	50.0	31.0	15.0	10.00	36.6	39.0	75.0/16872	82.5	4.52
M40FK2F1P50	50.0	31.0	15.0	10.00	36.6	39.0	40.0/8992	44.0	4.94
M40FA2P50	50.0	31.0	15.0	10.00	36.6	39.0	40.0/8992	44.0	4.54
M40FA1F1.02P50	50.0	31.0	15.0	10.00	36.6	39.0	40.0/8992	44.0	4.31
M40FA2F1.08P50	50.0	31.0	15.0	10.00	36.6	39.0	40.0/8992	44.0	4.08
M40F17A2P50.8	50.8	31.0	15.2	13.40	38.0	42.8	53.9/12127	59.2	4.90
M40F31A2.02P50.8	50.8	31.8	15.0	14.00	37.0	40.5	40.0/8992	44.0	4.60
M40F17K1.10P50.8	50.8	31.0	15.2	13.35	38.0	42.8	53.9/12127	59.2	4.60
M40F5A2565	65.0	24.0	15.0	12.00	38.0	41.0	40.0/8992	44.0	4.74
M40F10F76.2	76.2	31.5	15.0	14.00	38.0	42.0	40.0/8992	44.0	4.16
M40A2F2F80	80.0	36.0	20.0	8.50	40.5	45.0	40.0/8992	44.0	4.98
M40F1P125	125.0	36.0	38.0	14.27	75.6	-	40.0/8992	44.0	10.18
M56F1P100	100.0	38.0	20.5	10.00	42.3	46.1	56.0/12727	61.0	4.63
M56F2P100	100.0	42.0	22.5	10.00	44.6	48.5	56.0/12727	61.0	5.67
M56F2F100	100.0	42.0	22.5	10.00	44.6	48.5	56.0/12727	61.0	5.88
M56F3P100	100.0	38.0	20.5	10.00	42.3	46.1	56.0/12727	61.0	4.72
M56F3F.06100	100.0	38.0	20.5	10.00	42.3	46.1	56.0/12727	61.0	4.70
M56F8P100	100.0	38.0	17.0	10.00	38.8	42.6	56.0/12727	61.0	3.79
M56F9F1100	100.0	38.0	20.5	10.00	46.3	50.1	88.2/19845	97.0	5.80
M56F23F100	100.0	42.0	24.0	10.00	44.6	49.5	56.0/12727	61.0	5.52
M56F38A2P100	100.0	36.0	15.2	10.00	37.0	40.8	56.0/12727	61.0	3.64
M56F6A2.02PF1100	100.0	38.0	17.0	10.00	38.8	42.6	56.0/12727	61.0	4.10
M56A2P125	125.0	42.0	24.0	10.00	46.0	49.5	56.0/12727	61.0	5.24
M56F26A2.02F125	125.0	42.0	24.0	10.00	46.0	49.5	56.0/12727	61.0	4.82
M75P100	100.0	38.0	18.9	9.53	40.4	44.7	75.0/17045	83.0	4.85

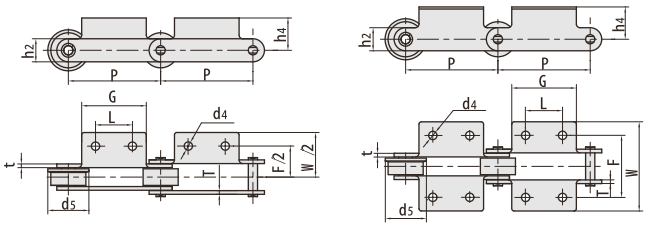

RBL chain number	p mm	L mm	G mm	F mm	W mm	h4 mm	h2 mm	d4 mm	t/T mm	d5 mm
M18f1A1P50	50.0	Δ	46.0	44.0	72.0	24.0	18.0	6.5	2.5	-
M18F2A1.02P50	50.0	Δ	41.0	48.0	68.0	25.0	15.0	6.5	3.00	-
M18F2A1F1.32P50	50.0	Δ	42.0	44.6	64.6	22.5	15.0	6.0	3.00	-
M18F4A1.02S50	50.0	Δ	30.0	50.0	83.0	20.0	15.0	8.0	2.03	-
M18F8K 1.03P50	50.0	Δ	46.0	44.0	66.6	24.0	18	8.5	2.50	-
M20K 1F2.02S50	50.0	Δ	20.0	54.0	75.0	16.0	18.0	6.6	2.50	-
M20A2F1S50	50.0	20.0	35.0	52.0	80.0	13.0	18.0	8.1	2.50	-
M28F1A2P80	80.0	25.0	45.8	66.0	91.6	11.8	20.5	8.8	3.25	-
M28F3A2P63	63.0	20.0	50.0	64.0	92.0	20.0	20.0	9.0	4.00	-
M28F3A2F100	100.0	40.0	76.0	64.0	100.0	20.0	20.0	9.0	4.00	40.0
M32A1.02P50	50.0	Δ	60.0	62.0	97.0	35.0	23.0	10.0	3.00	-
M32A1F1P50	50.0	Δ	30.0	62.0	92.0	28.0	23.0	10.0	3.00	-
M32A1F2.02PF150	50.0	Δ	60.0	62.0	97.0	16.5	23.0	10.0	3.00	-
M35F4A1.01C 69	69.0	Δ	60.0	50.0	74.0	25.5	19.0	7.0	2.50	-
M40FA1.02P50	50.0	Δ	60.0	70.0	98.0	17.5	25.0	10.0	4.00	-
M40FK2F1P50	50.0	30.0	60.0	67.5	100.0	17.0	25.0	9.0	4.00	-
M40FA2P50	50.0	30.0	45.0	93.0	136.0	14.5	25.0	6.5	4.00	-
M40FA1F1.02P50	50.0	Δ	35.0	54.0	104.0	20.5	25.0	10.5	4.00	-
M40FA2F1.08P50	50.0	25.0	45.0	90.0	122.0	22.0	25.0	8.5	4.00	-
M40F17A2P50.8	50.8	30.0	55.0	66.0	92.0	18.0	25.0	10.2	5.00/4.00	-
M40F31A2.02P50.8	50.8	19.0	40.0	64.0	100.0	19.0	26.3	8.0	4.00	-
M40F17K 1.10P50.8	50.8	Δ	55.0	66.0	92.0	18.0	25.0	10.2	5.00A.00	-
M40F5A2S65	65.0	25.0	45.0	90.0	122.0	24.5	30.0	8.5	4.00	-
M40F10F76.2	76.2	22.2	38.3	76.2	106.5	19.0	26.0	9.4	4.00	40.0
M40A2F2F80	80.0	20.0	50.0	70.0	112.0	35.0	25.0	9.0	3.50	45.0
M40F1P125	125.0	50.0	90.0	100.0	140.0	36.0	50.0	13.0	6.00	-
M56F1P100	100.0	40.0	70.0	67.5	96.6	35.0	25.0	9.0	4.00	-
M56F2P100	100.0	29.7	50.0	124.0	148.0	21.5	32.0	7.0	4.00	-
M56F2F100	100.0	29.7	50.0	124.0	148.0	21.5	32.0	7.0	4.00	50.0
M56F3P100	100.0	50.0	70.0	71.0	101.0	35.0	25.0	9.0	4.00	-
M56F3F.06100	100.0	50.0	70.0	71.0	101.0	35.0	25.0	9.0	4.00	44.5
M56F8P100	100.0	Δ	70.0	63.8	95.0	25.0	25.0	8.2	4.00	-
M56F9F1100	100.0	40.0	70.0	68.0	96.6	25.0	32.0	9.0	5.00	45.0
M56F23F100	100.0	40.0	70.0	71.4	100.6	35.0	25.0	9.0	4.00	50.0
M56F38A2P100	100.0	40.0	60.0	70.0	100.0	20.0	25.0	9.0	4.00	
M56F6A2.02PF1100	100.0	40.0	70.0	71.5	92.0	55.0	25.0	6.5	4.00	-
M56A2P125	125.0	50.0	75.0	88.0	128.0	30.0	30.0	11.0	4.00	-
M56F26A2.02F125	125.0	50.0	75.0	88.0	128.0	30.0	30.0	9.0	4.00	50.0
M75P100	100.0	40.0	70.0	64.0	112.0	24.9	26.0	9.0	4.00	-

*Attachments with 1 hole.

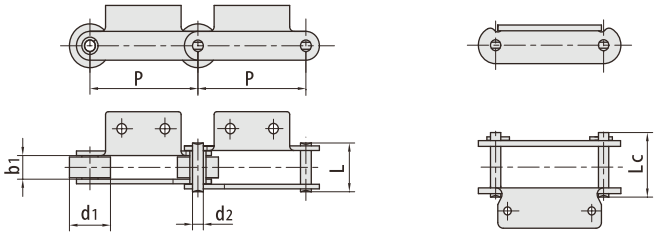

RBL chain number	Pitch	Roller diameter	Width between inner plates	Pin diameter	Pin length		Tensile strength	Average Tensile strength	Weight
	P mm	d1 max mm	b1 min mm	d2 max mm	L max mm	Lc max mm	Q min kN/LBF	Qo kN	q kg/m
M75P100F1	100.0	38.0	18.9	9.53	38.4	42.7	75.0/17045	83.0	4.01
M75P100F3	100.0	28.5	23.9	11.10	46.3	50.3	75.0/17045	83.0	4.53
M75F4P100	100.0	38.0	18.9	9.53	40.4	44.7	75.0/17045	83.0	4.62
M75PF1100	100.0	19.1	18.9	9.53	40.4	44.7	75.0/17045	75.0	3.43
M80K1F1P100	100.0	50.0	28.0	12.00	55.0	58.5	80.0/18000	88.0	9.10
80K2F1B100	100.0	18.0	28.0	12.00	55.0	58.5	80.0/18000	88.0	5.94
80F5K1B100	100.0	18.0	28.0	12.00	55.0	58.5	80.0/18000	88.0	5.45
M80A2F1F160	160.0	50.0	29.0	12.00	65.0	-	80.0/18000	88.0	7.45
M80F43K2P200	200.0	50.0	28.0	12.00	55.0	59.0	80.0/18000	88.0	7.90
M112F5K2P100	100.0	36.0	37.0	16.00	69.0	74.0	112.0725200	123.2	8.28
M112A2F18.04P100	100.0	60.0	31.0	15.00	64.0	73.0	112.0/25200	123.2	11.80
112K2F2B100	100.0	21.0	32.0	15.00	64.5	69.0	112.0/25200	123.2	7.53
M112F38A 2.04P100	100.0	60.0	32.0	15.00	64.5	69.0	112.0/25200	123.2	12.74
M112F16K1P125	125.0	60.0	32.0	15.00	68.5	73.0	112.0/25200	123.2	13.00
M112K2F1S125	125.0	30.0	32.0	16.00	64.5	69.0	112.0/25200	123.2	7.35
M112F9A2F180	180.0	50.0	32.0	15.00	64.5	69.0	160.0/35993	176.0	10.30
M112F3F200	200.0	60.0	37.0	16.00	69.0	74.0	112.0/25200	123.2	11.00
M112A2F21F315	315.0	60.0	32.0	15.00	65.0	70.0	112.0/25200	123.2	8.50
M160F1K2P100	100.0	36.0	36.0	18.00	76.0	80.0	160.0/35993	176.0	10.80
160F1K2.03B100	100.0	18.0	36.0	18.00	76.0	80.0	160.0/35993	176.0	9.73
M160F12K2S100	100.0	36.0	38.0	14.00	76.0	-	100.0/22496	110.0	9.33
160F2B100	100.0	25.0	37.0	18.00	73.3	83.0	222.0/49940	244.2	11.36
M160F25K2.04B100	100.0	25.0	37.0	18.00	73.3	79.5	160.0/36364	176.0	10.83
160F41K2B100	100.0	36.0	37.0	18.00	73.3	79.5	160.0/35993	176.0	14.75
160F55K2B100	100.0	25.0	37.0	18.00	-	86.0	160.0/35993	176.0	15.04
M160F3K1 FlP101.6	101.6	66.7	26.0	26.90	58.0	78.5	156.0/35093	171.6	17.37
M160A2F1.02P152.4	152.4	66.7	25.4	26.90	58.0	68.0	160.0/35993	176.0	12.55
M160A2F7F200	200.0	70.0	37.0	18.00	85.0	-	181.8/40905	200.0	15.20
M160A2F8F200	200.0	70.0	37.0	18.00	85.0	-	181.8/40905	200.0	15.23
M160K2F2S200	200.0	36.0	36.0	18.00	76.0	80.0	160.0/36364	176.0	11.40
M160A2F8F200	200.0	70.0	37.0	18.00	85.0	-	181.8/40905	200.0	15.20
M224F6A2P160	160.0	85.0	42.0	21.00	87.5	92.5	224.0/50909	246.5	27.56
M224F29A2F200	200.0	85.0	43.0	21.00	85.0	91.0	224.0/50909	246.0	21.60
M224F1K2P200	200.0	85.0	42.0	21.00	95.0	-	224.0/50909	246.0	21.20
M224F42K2S200	200.0	42.0	44.0	21.00	-	99.0	224.0/50909	246.0	17.20
M315F22A2F400	400.0	100.0	56.0	25.00	109.8	115.3	315.0/70815	346.5	26.60
M315K2F1P250	250.0	50.0	47.0	25.00	98.9	105.0	315.0/70815	346.5	20.60
M450F26A2F400	400.0	100.0	56.0	30.00	111.0	118.0	315.0/70815	346.5	27.60

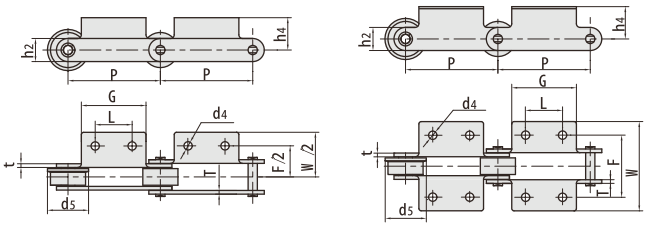

RBL chain number	p mm	L mm	G mm	F mm	W mm	h4 mm	h2 mm	d4 mm	t/T mm	d5 mm
M75P100F1	100.0	40.0	70.0	64.0	112.0	24.4	26.0	9.0	3.50	-
M75P100F3	100.0	50.0	70.0	75.7	96.7	35.0	26.0	9.7	4.00	-
M75F4P100	100.0	40.0	70.0	90.0	112.4	24.9	26.0	8.5	4.00	-
M75PFl100	100.0	40.0	70.0	64.0	112.0	24.9	26.0	9.0	4.00	-
M80K1FFP100	100.0	△	30.0	96.0	138.0	35.0	35.0	11.0	5.00	-
M80K2F IB100	100.0	70.0	100.0	96.0	130.0	35.0	35.0	11.0	5.00	-
M80F5K1B100	100.0	△	60.0	100.0	156.0	23.2	35.0	13.0X17.0	5.00	-
M80A2F1F160	160.0	60.0	95.0	94.0	124.0	27.5	35.0	9.0	5.00	60.0
M80F43K2P200	200.0	80.0	120.0	96.0	130.0	35.0	35.0	11.0	5.00	-
M112F5K2P100	100.0	35.0	65.0	98.5	140.0	40.0	40.0	14.0	6.00	-
M112A2F18.04P100	100.0	30.0	60.0	100.0	130.0	33.0	36.0	9.0	6.00	-
M112K2F2B100	100.0	30.0	60.0	100.0	130.0	30.0	40.0	9.0	6.00	-
M112F38A 2.04P100	100.0	35.0	70.0	110.0	160.0	40.0	40.0	14.0	6.00	-
M112F16K1P125	125.0	△	72.0	120.0	184.0	39.0	40.0	13.0	7.00	-
M1EK2F1S125	125.0	80.0	110.0	85.8	115.8	35.0	40.0	13.0	6.00	-
MH2F9A2F180	180.0	100.0	130.0	110.0	160.0	40.0	40.0	14.0	6.00	60.0
MH2F3F200	200.0	90.0	120.0	102.0	137.5	40.0	45.0	11.0	6.00	75.0
M112A2F21F315	315.0	160.0	200.0	110.0	160.0	40.0	40.0	14.0	6.00	70.0
M160F1K2P100	100.0	40.0	80.0	124.0	183.0	35.0	40.0	14.0	7.00	
M160F1 K2.03B100	100.0	40.0	80.0	124.0	283.0	35.0	40.0	14.0	7.00	
M160F12K2S100	100.0	30.0	70.0	100.0	120.0	35.0	40.0	13.0	5.60	
M160F2B100	100.0	△	110.0	125.0	155.0	45.0	50.0	17.0	7.00	
M160F25K 2.04B100	100.0	40.0	80.0	124.0	180.0	45.0	50.0	14.0	7.00	
M160F41K2B100	100.0	40.0	80.0	124.0	180.0	45.0	55.0	14.0	7.00	
M160F55K2B100	100.0	40.0	80.0	124.0	200.0	43.0	50.0	14.0	8.00	
M160F3K1F1P101.6	101.6	△	56.0	175.0	204.0	38.0	51.0	11.0	7.1/5.1	
M160A2F1.02P152.4	152.4	38.0	64.0	120.0	154.0	30.0	50.0	10.5	7.1/5.1	
M160A2F7F200	200.0	85.0	115.0	124.0	170.0	45.0	51.0	14.0	7.00	85.0
M160A2F8F200	200.0	80.0	115.0	124.0	170.0	45.0	51.0	12.0	7.00	85.0
M160K2F2S200	200.0	100.0	180.0	103.0	133.0	45.0	51.0	9.0	7.00	-
M160A2F8F200	200.0	80.0	115.0	124.0	170.0	45.0	51.0	12.0	7.00	85.0
M224F6A2P160	160.0	80.0	125.0	136.0	182.0	62.0	72.0	17.0	8.00	-
M224F29A2F200	200.0	50.0	100.0	170.0	200.0	45.0	60.0	13.0	8.00	100.0
M224F1K2P200	200.0	80.0	120.0	128.0	168.0	40.0	50.0	14.0	9.00	-
M224F42K2S200	200.0	60.0	100.0	142.0	180.0	54.0	62.0	15.0	8.00	-
M315F22A2F400	400.0	200.0	250.0	160.0	207.6	70.0	70.0	18.0	10.00	120.0
M315K2F1P250	250.0	60.0	100.0	127.0	168.0	57.0	82.0	14.0	10.00	-
M450F26A2F400	400.0	200.0	250.0	160.0	207.6	70.0	75.0	18.0	10.00	119.0

*Attachments with 1 hole.

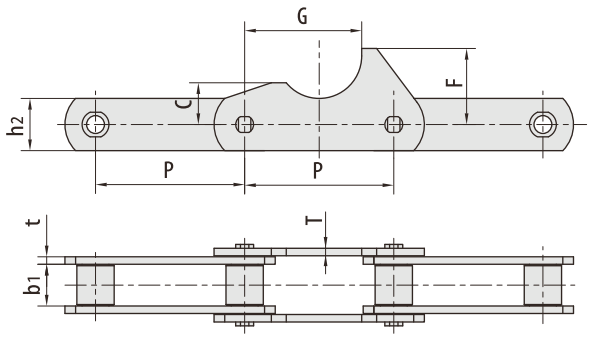

RBL chain number	p mm	b1 mm	h2 mm	t/T mm	C mm	F mm	G mm
M80F29s100	100.00	28.00	35.00	5.00	28.00	51.00	78.50

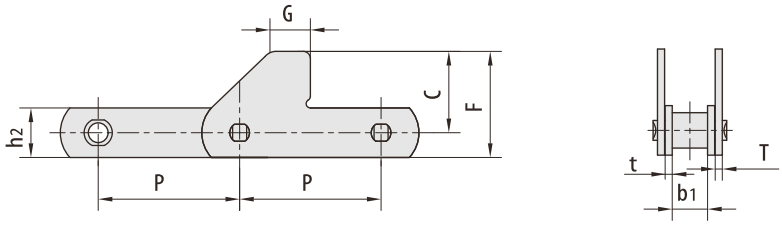

RBL chain number	p mm	b1 mm	h2 mm	t/T mm	C mm	F mm	G mm
M80F41P100	100.00	28.00	35.00	5.00	40.00	75.00	29.00

*with SD Attachments.

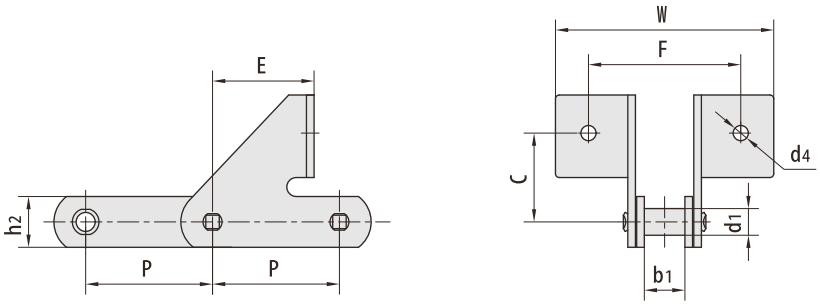

RBL chain number	p mm	d1 mm	b1 mm	h2 mm	C mm	E mm	F mm	W mm	d4 mm
M112F52SDB100	100.00	21.00	32.00	40.00	70.00	80.00	120.00	172.00	12.00

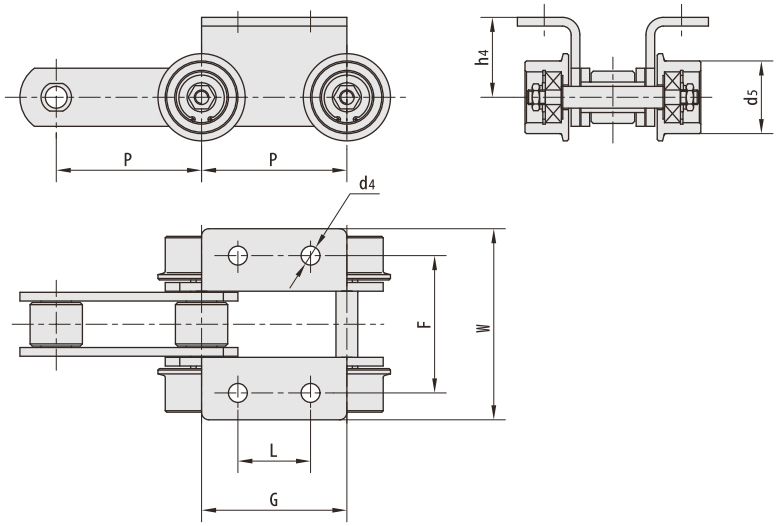

RBL chain number	P mm	L mm	G mm	F mm	W mm	h4 mm	d4 mm	d5 mm
M112F34P100	100.00	50.00	100.00	95.00	130.00	55.00	13.00	50.00

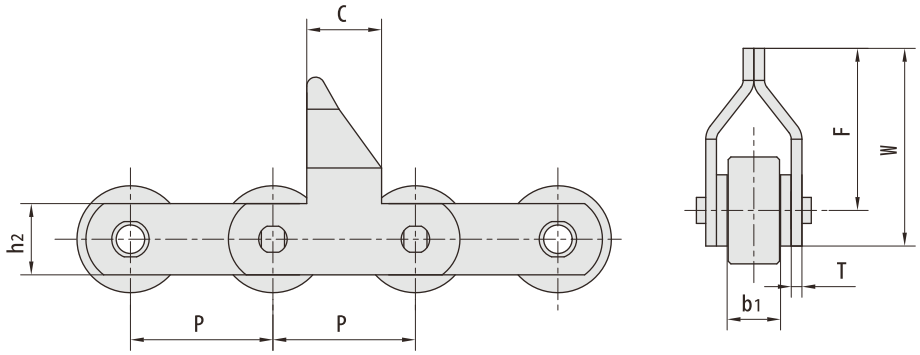

RBL chain number	P mm	b1 mm	h2 mm	T mm	C mm	F mm	W mm
M112F39P80	80.00	32.00	40.00	6.00	42.00	91.00	111.00

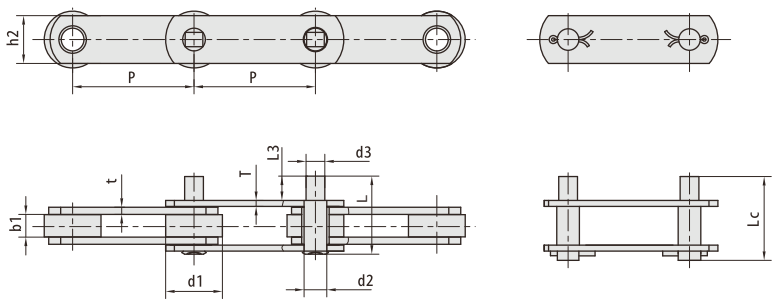

RBL chain number	Pitch	Roller diameter	Width between inner plates	Pin diameter	Extended Pin dimension		Pin length		Inner plate depth	Plate thickness
	P mm	d1 max mm	b1 min mm	d2 max	d3 max mm	L3 mm	L max mm	Lc max mm	h2 max mm	t/T max mm
M18F7D3P75	75.00	25.00	11.50	5.72	12.00	30.0	56.6	58.9	20.0	3.0
M20D 1F1.02P80	80.00	25.00	16.00	6.00	6.00	25.5	54.7	57.2	18.0	2.5
M75D3P100	100.00	38.00	18.95	9.53	11.00	38.0	76.2	80.5	26.0	4.0
M20D 1F2.02P80	80.00	25.00	16.00	6.00	6.00	27.8	57.0	59.5	18.0	2.5
M35F1P35	35.00	20.00	16.00	7.00	10.00	30.0	59.0	61.9	18.0	2.5
M35F7D1P35	35.00	20.00	16.00	8.00	10.00	25.0	56.0	-	18.0	3.0
M100F11P101.6D 3	101.60	47.50	19.00	19.00	15.70	20.0	66.3	71.5	40.0	6.0/5.0
M100P 152.4D 3	152.40	47.50	19.00	19.00	18.25	84.8	127.5	132.7	40.0	5.0/4.0
M100P203.2D3	203.20	47.50	19.00	19.00	18.25	84.8	127.5	132.7	40.0	5.0/4.0
M160F58D 1.04P125	125.00	70.00	34.00	18.00	18.00	71.6	104.0	-	52.0	8.0

RBL chain number	Tensile strength Q min kN/LBF	Average Tensile strength Qo min kN	Weight q kg/m
M18F7D3P75	18.0/4050	20.00	2.14
M20D 1F1.02P80	20.0/4545	25.00	1.65
M75D 3P100	75.0/16870	82.50	3.61
M20D 1 F2.02P80	20.0/4545	22.00	1.65
M35F1P35	35.0/7874	39.00	2.47
M35F7D1P35	35.0/7874	39.00	2.77
M100F11P101.6D3	150.0/33722	165.00	7.60
M100P152.4D 3	100.0/22496	110.00	6.36
M100P203.2D3	100.0/22496	110.00	5.49
M160F58D1.04P125	160.0/36364	176.00	17.70

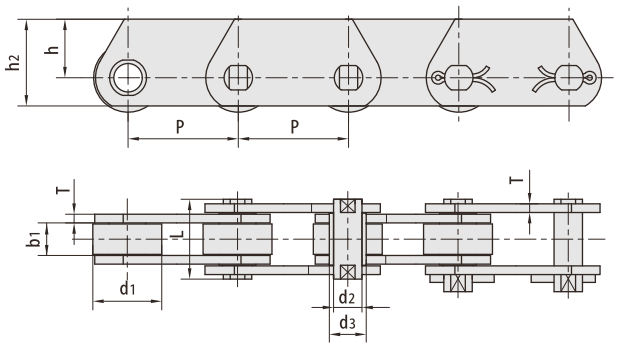

RBL chain number	Pitch P mm					Roller diameter d1 max mm	Pin diameter d2 max mm	Bush diameter d3 max mm	Plate thickness T max mm
MT20	40.0	50.0	63.0	80.0	100.0	25.0	6.0	9.0	2.5
MT28	50.0	63.0	80.0	100.0	125.0	30.0	7.0	10.0	3.0
MT40	63.0	80.0	100.0	125.0	160.0	36.0	8.5	12.5	3.5
MT56	63.0	80.0	100.0	125.0	160.0	42.0	10.0	15.0	4.0
MT80	80.0	100.0	125.0	160.0	200.0	50.0	12.0	18.0	5.0
MT112	80.0	100.0	125.0	160.0	200.0	60.0	15.0	21.0	6.0
MT160	100.0	125.0	160.0	200.0	250.0	70.0	18.0	25.0	7.0
MT224	125.0	160.0	200.0	250.0	315.0	85.0	21.0	30.0	8.0
MT315	160.0	200.0	250.0	315.0	400.0	100.0	25.0	36.0	10.0
MT450	200.0	250.0	315.0	400.0	500.0	120.0	30.0	42.0	12.0

RBL chain number	Width between inner plates b1 min mm	Pin length L max mm	Plate depth h2 max mm	Plate depth H max mm	Tensile strength Q min kN/LBF	Tensile strength *Q min kN/LBF
MT20	16.0	35.0	25.0	16.0	20.0/4545	32.0/7270
MT28	18.0	40.0	30.0	20.0	28.0/6364	42.0/9545
MT40	20.0	45.0	35.0	22.5	40.0/9091	60.0/13635
MT56	24.0	52.0	45.0	30.0	56.0/12727	85.0/19318
MT80	28.0	62.0	50.0	32.5	80.0/18182	125.0/28408
MT112	32.0	73.0	60.0	40.0	112.0/25454	175.0/39768
MT160	37.0	85.0	70.0	45.0	160.0/36364	260.0/59090
MT224	43.0	98.0	90.0	60.0	224.0/50909	340.0/77272
MT315	48.0	112.0	100.0	65.0	315.0/71591	520.0/118180
MT450	56.0	135.0	120.0	80.0	450.0/102272	700.0/159089

*The Q denotes the tensile strength after hardened

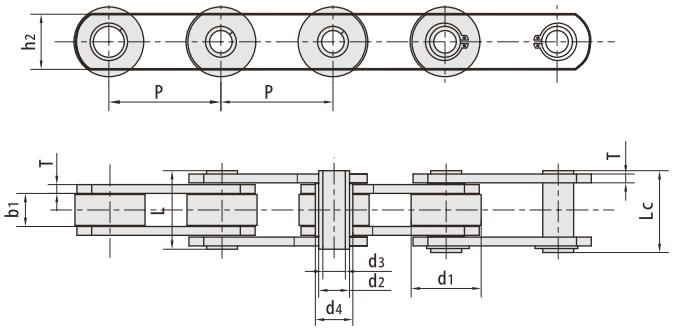

1. Without rollers 2. With S small rollers 3. With P large rollers 4. With F flanged rollers

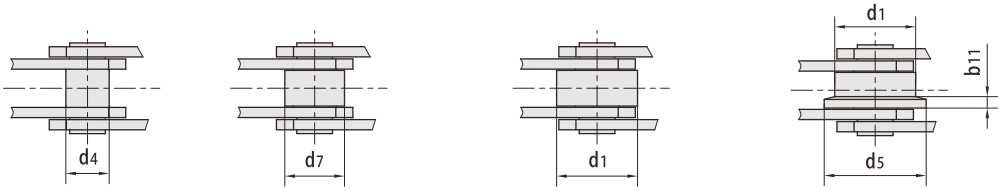

RBL chain number	Pitch P mm						Roller diameter d1 max mm	d7 max mm	d5 max mm	b11 mm	Bush diameter d3 max mm	Plate depth h2 max mm
MC28	63.0	80.0	100.0	125.0	160.0		36.0	25.0	45.0	4.5	17.5	25.0
MC56	80.0	100.0	125.0	160.0	200.0	250.0	50.0	30.0	60.0	5.0	21.0	35.0
MC112	100.0	125.0	160.0	200.0	250.0	315.0	70.0	42.0	85.0	7.0	29.0	50.0
MC224	160.0	200.0	250.0	315.0	400.0	500.0	100.0	60.0	120.0	10.0	41.0	70.0

RBL chain number	Width between inner plates b1 min mm	Pin diameter d2 max mm	Pin diameter d3 min mm	Pin length L min mm	Pin length Lc max mm	Plate thickness T max mm	Tensile strength Q min kN/LBF	Tensile strength *Q min kN/LBF
MC28	20.0	13.0	8.2	36.0	38.5	3.5	28.076364	40.0/9091
MC56	24.0	15.5	10.2	45.0	47.5	4.0	56.0/12727	90.0/20454
MC112	32.0	22.0	14.3	62.5	64.3	6.0	112.0/25454	180.0/40908
MC224	43.0	31.0	20.3	83.0	85.5	8.0	224.0/50909	350.0/79544

*The Q denotes the tensile strength after hardened

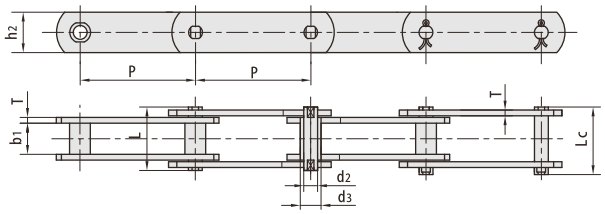

1. Without rollers 2. With S small rollers 3. With P large rollers 4. With F flanged rollers

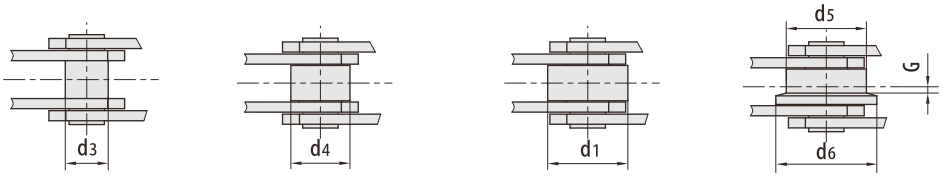

RBL chain number	Pitch P mm							Roller diameter d1 max mm	d4 max mm	d5 max mm	d6 max mm	G mm	Bush diameter d3 max mm
FV40	50.0	63.0	80.0	100.0	125.0	-	-	32.0	20.0	40.0	50.0	4.0	15.0
FV63	50.0	63.0	80.0	100.0	125.0	160.0	-	40.0	26.0	50.0	63.0	5.0	18.0
FV90	63.0	80.0	100.0	125.0	160.0	200.0	250.0	48.0	30.0	63.0	78.0	6.5	20.0
FV112	80.0	100.0	125.0	160.0	200.0	250.0	-	55.0	32.0	72.0	90.0	7.5	22.0
FV140	63.0	100.0	125.0	160.0	200.0	250.0	-	60.0	36.0	80.0	100.0	9.0	26.0
FV180	100.0	125.0	160.0	200.0	250.0	315.0	-	70.0	42.0	100.0	125.0	13.0	30.0
FV250	125.0	160.0	200.0	250.0	315.0	400.0	-	80.0	50.0	125.0	155.0	15.0	36.0
FV315	160.0	200.0	250.0	315.0	400.0	-	-	90.0	60.0	140.0	175.0	18.0	42.0

RBL chain number	Width between inner plates b1 min mm	Pin diameter d2 max mm	Pin length L min mm	Pin length Lc max mm	plate depth h2 mm	Plate thickness T max mm	Tensile strength Q min kN/LBF	Tensile strength *Q min kN/LBF
FV40	18.0	10.0	36.0	39.0	25.0	3.0	40.0/9091	47.0/10681
FV63	22.0	12.0	45.0	48.5	30.0	4.0	63.0/14317	75.0/17045
FV90	25.0	14.0	53.0	56.5	35.0	5.0	90.0/20453	115.0/26136
FV112	30.0	16.0	62.0	66.0	40.0	6.0	112.0/25452	170.0/38636
FV140	35.0	18.0	67.0	71.5	45.0	6.0	140.0/31815	180.0/40908
FV180	45.0	20.0	86.0	92.0	50.0	8.0	180.0/40908	250.0/56817
FV250	55.0	26.0	97.0	103.5	60.0	8.0	250.0/56817	300.0/68181
FV315	65.0	30.0	113.0	126.5	70.0	10.0	315.0/71591	480.0/109089

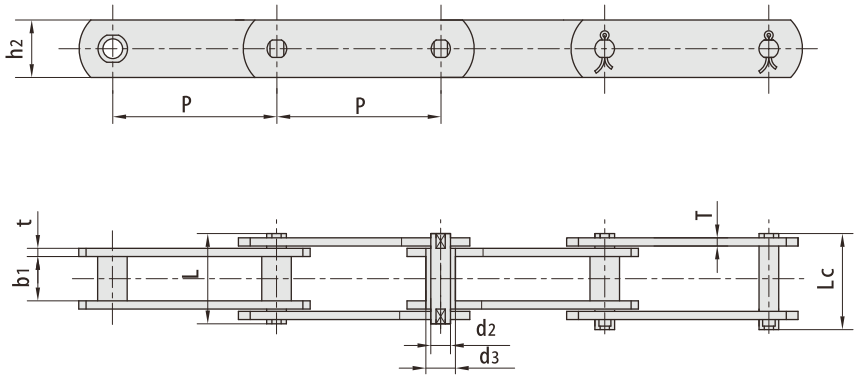

1. Without rollers

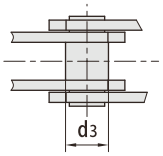

2. With S small rollers

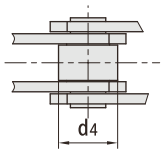

3. With P large rollers

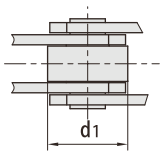

4. With F flanged rollers

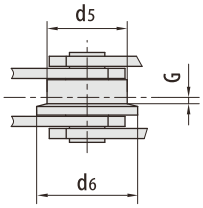

RBL chain number	Pitch	Roller diameter						Pin diameter	Pin length		plate depth	Plate thickness	Tensile strength	Weight
	P mm	d1 max mm	d3 max mm	d4 max mm	d5 max mm	d6 max mm	G mm	d2 max mm	L max mm	Lc max mm	h2 max mm	t/T max mm	Q Kn/lbf	q kg/m
FV40F3P63	63.0	32.0	-	-	-	-	-	10.0	38.1	41.5	45.0	4.0	80.0/17985	2.13
FV63F11P100	100.0	40.0	-	-	-	-	-	14.0	37.0	-	30.0	4.0	60.0/13488	3.89
FV63F12P125	125.0	40.0	-	-	-	-	-	10.0	44.5	48.0	30.0	4.0	63.0/14162	3.84
FV90B50	50.0	-	20.0	-	-	-	-	14.0	52.0	56.4	35.0	5.0	90.0/20453	6.10
FV90F9B100	100.0	-	20.0	-	-	-	-	14.0	60.2	64.6	35.0	6.0/8.0	90.0/20453	6.00
FV90F10B100	100.0	-	20.0	-	-	-	-	14.0	60.2	64.6	40.0	6.0/6.0	90.0/20453	6.83
FV112S63	63.0	-	-	32.0	-	-	-	16.0	63.0	67.5	40.0	6.0	112.0/25454	8.80
FV140B80	80.0	-	26.0	-	-	-	-	18.0	67.0	72.5	45.0	6.0	140.0/31473	8.55
FV140P Fl125	125.0	65.0	-	-	-	-	-	18.0	67.0	71.5	45.0	6.0	140.0/31473	12.76
FV140F27F125	125.0		-	-	80.0	93.5	9.5	18.0	68.4	73.0	45.0	6.4	140.0/31473	17.00
FV180B150	150.0	-	30.0	-	-	-	-	20.0	85.5	92.0	50.0	8.0	180.0/40492	8.24

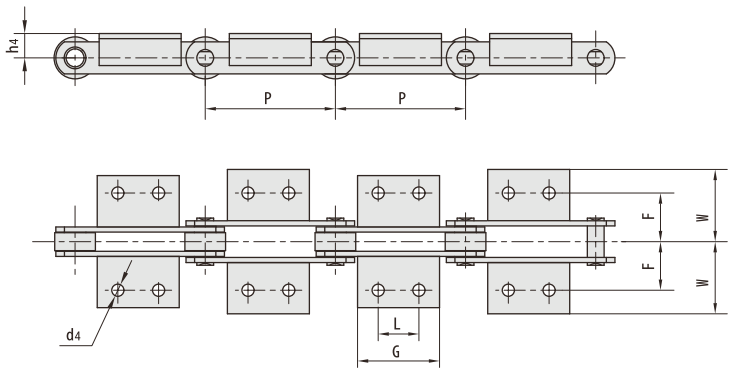

RBL chain number	P mm	L mm	G mm	d4 mm	F mm	W mm	h4 mm
FV40	50.0	△	45.0	6.5	25.0	40.5	20.0
	63.0	△	31.0				
	80.0	25.0	45.0				
	100.0	30.0	50.0				
	125.0	30.0	60.0				
FV63	63.0	△	40.0	8.4	34.0	50.0	30.0
	80.0	25.0	45.0				
	100.0	30.0	50.0				
	125.0	40.0	60.0				
	160.0	50.0	70.0				
FV90	63.0	△	30.0	8.4	40.0	64.0	35.0
	80.0	25.0	45.0				
	100.0	30.0	50.0				
	125.0	40.0	60.0				
	160.0	50.0	70.0				
	200.0	60.0	80.0				
	250.0	65.0	85.0				
FV112	100.0	30.0	50.0	11.0	50.0	70.0	40.0
	125.0	40.0	65.0				
	160.0	50.0	75.0				
	200.0	65.0	90.0				
	250.0	80.0	105.0				

*Attachments with 1 hole.

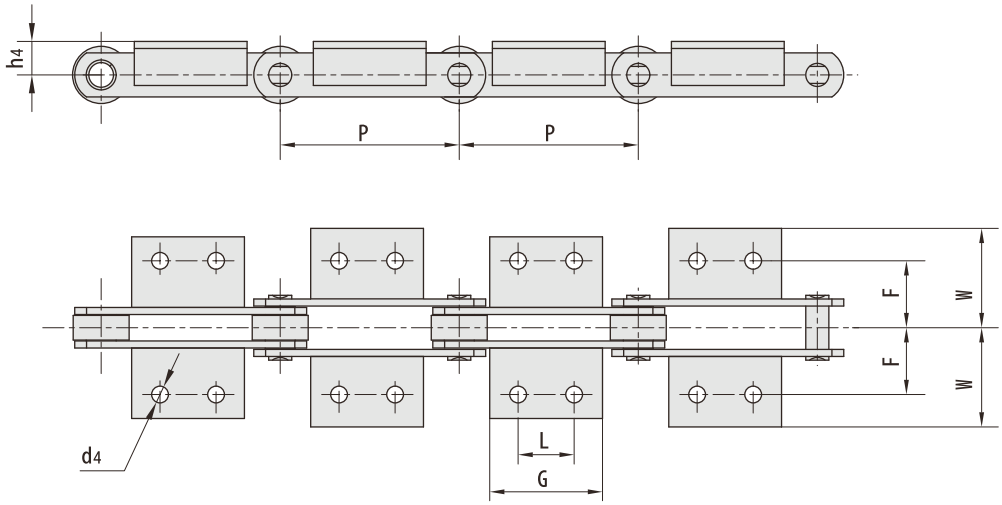

RBL chain number	P mm	L mm	G mm	d4 mm	F mm	W mm	h4 mm
FV140	100.0	30.0	55.0	11.0	50.0	81.0	45.0
	125.0	40.0	65.0				
	160.0	50.0	75.0				
	200.0	65.0	90.0				
	250.0	80.0	105.0				
FV180	125.0	35.0	63.0	13.0	64.0	91.0	45.0
	160.0	50.0	80.0				
	200.0	65.0	95.0				
	250.0	80.0	110.0				
	315.0	100.0	130.0				
FV250	160.0	50.0	80.0	14.0	69.0	106.0	55.0
	200.0	65.0	95.0				
	250.0	80.0	110.0				
	315.0	100.0	130.0				
	400.0	100.0	130.0				
FV315	160.0	△	50.0	14.0	85.0	130.0	60.0
	200.0	65.0	95.0				
	250.0	80.0	110.0				
	315.0	100.0	130.0				
	400.0	100.0	130.0				

*Attachments with 1 hole.

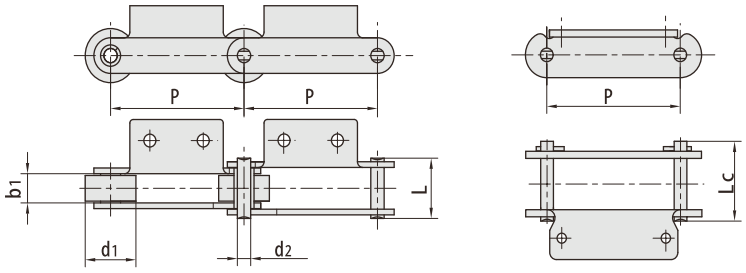

RBL chain number	Pitch	Roller diameter	Width between inner plates	Pin diameter	Pin length		Tensile strength	Average Tensile strength	Weight
	P mm	d1 max mm	b1 min mm	d2 max mm	L max mm	Lc max mm	Q min kN/LBF	Qo kN	q kg/m
FV40A2.02P40	40.00	32.00	18.00	10.00	36.0	40.0	40.0/8992	44.0	4.98
FV63A2F4S100	100.00	26.00	22.00	12.00	46.0	50.0	63.0/14172	69.3	3.95
FV90A2F1P85	85.00	50.00	25.00	14.00	52.0	56.5	90.0,20250	100.0	10.15
FV90A2F1P100	100.00	50.00	25.00	14.00	52.0	56.5	90.0/20250	100.0	8.74
FV112F1A1P100	100.00	55.00	30.00	16.00	71.0	76.5	180.0/40492	200.0	14.30
FV112F1A1P80	80.00	55.00	30.00	16.00	71.0	76.5	180.0/40493	200.0	16.60
FV112F14A2P125	125.00	55.00	30.00	16.00	63.0	67.5	112.0/25454	123.2	10.0
FV180F21A2P160	160.00	80.00	45.00	20.00		90.0	180.0/40492	200.0	20.4
FV250K2F8P250	250.00	80.00	55.00	26.00		107.5	250.0/56817	275.0	22.6

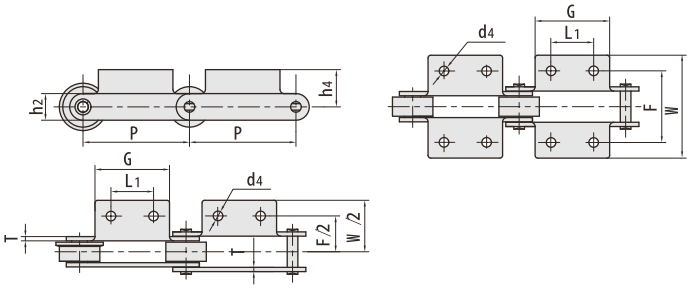

RBL chain number	P mm	L1 mm	G mm	F mm	W mm	h4 mm	h2 mm	d4 mm	T mm
FV40A2.02P40	40.00	17.00	30.00	60.0	90.0	20.0	25.0	6.4	3.00
FV63A2F4S100	100.00	30.00	50.00	86.0	106.0	20.0	30.0	10.0	4.00
FV90A2F1P85	85.00	40.00	60.00	80.0	109.2	40.0	35.0	9.5	5.00
FV90A2F1P100	100.00	40.00	60.00	80.0	109.2	40.0	35.0	9.5	5.00
FV112F1A1P100	100.00	△	50.00	120.0	164.0	50.0	40.0	15.0	8.00
FV112F1A1P80	80.00	△	50.00	120.0	164.0	50.0	40.0	15.0	8.00
FV112F14A2P125	125.00	40.00	65.00	100.0	130.0	40.0	40.0	11.0	6.00
FV180F21A2P160	160.00	50.00	80.00	140.0	180.0	40.0	50.0	14.0	8.00
FV250K2F8P250	250.00	80.00	120.00	140.0	191.0	50.0	60.0	14.0	8.00

*Attachments with 1 hole.

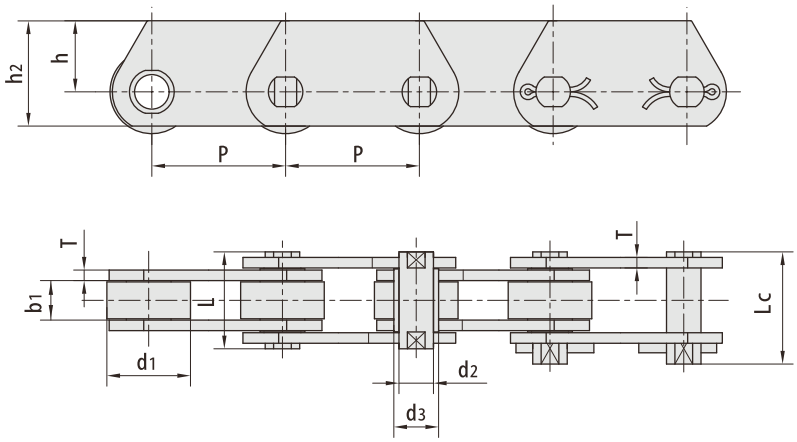

RBL chain number	Pitch P mm							Roller diameter d1 max mm	Pin diameter d2 max mm	Bush diameter d3 max mm	Plate thickness T max mm
FVT40	40.0	50.0	63.0	80.0	100.0	125.0	-	32.0	10.0	15.0	3.0
FVT63	63.0	80.0	100.0	125.0	160.0	-	-	40.0	12.0	18.0	4.0
FVT90	63.0	80.0	100.0	125.0	160.0	200.0	250.0	48.0	14.0	20.0	5.0
FVT112	100.0	125.0	160.0	200.0	250.0	-	-	55.0	16.0	22.0	6.0
FVT140	100.0	125.0	160.0	200.0	250.0	-	-	60.0	18.0	25.0	6.0
FVT180	125.0	160.0	200.0	250.0	315.0	-	-	70.0	20.0	30.0	8.0
FVT250	160.0	200.0	250.0	315.0	-	-	-	80.0	26.0	36.0	8.0
FVT315	160.0	200.0	250.0	315.0	400.0	-	-	90.0	30.0	42.0	10.0

RBL chain number	Width between inner plates b1 min mm	Pin length		plate depth		Tensile strength	
		L min mm	Lc max mm	h2 max mm	h max mm	Q min kN/LBF	*Q min kN/LBF
FVT40	18.0	36.0	39.0	35.0	22.5	40.0/9091	47.0/10681
FVT63	22.0	45.0	48.5	40.0	25.0	63.0/14317	75.0/17045
FVT90	25.0	53.0	56.5	45.0	27.5	90.0,20453	115.0/26136
FVT112	30.0	62.0	66.0	50.0	30.0	112.0/25452	170.0^8636
FVT140	35.0	67.0	71.5	60.0	37.5	140.0/31815	180.0/40908
FVT180	45.0	86.0	92.0	70.0	45.0	180.0/40908	250.0/56817
FVT250	55.0	97.0	103.5	80.0	50.0	250.0/56817	300.0/68181
FVT315	65.0	113.0	126.5	90.0	55.0	315.0/71591	480.0/109089

*The Q denotes the tensile strength after hardened

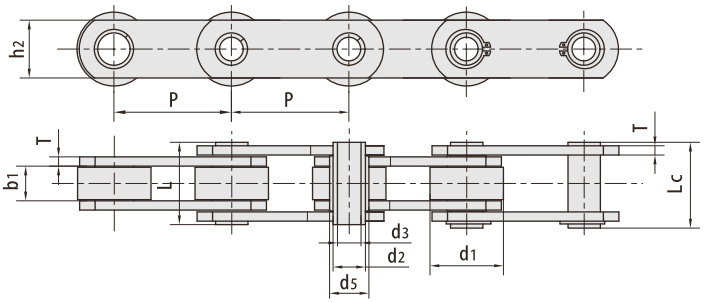

1. Without rollers

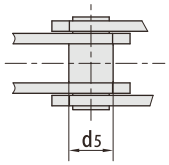

2. With S small rollers

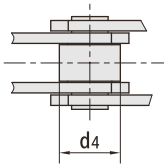

3. With P large rollers

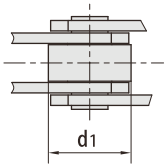

4. With F flanged rollers

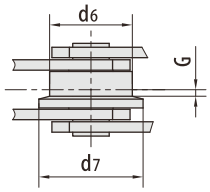

RBL chain number	Pitch P mm							Roller dimension d1 max mm	d4 max mm	d6 max mm	d7 max mm	G mm
FVC63	63.0	80.0	100.0	125.0	160.0	-	-	40.0	26.0	50.0	63.0	5.0
FVC90	63.0	80.0	100.0	125.0	160.0	200.0	250.0	48.0	30.0	63.0	78.0	6.5
FVC112	100.0	125.0	160.0	200.0	250.0	-	-	55.0	32.0	72.0	90.0	7.5
FVC140	100.0	125.0	160.0	200.0	250.0	-	-	60.0	36.0	80.0	100.0	9.0
FVC180	125.0	160.0	200.0	250.0	315.0	-	-	70.0	42.0	100.0	125.0	13.0
FVC250	160.0	200.0	250.0	315.0	400.0	-	-	80.0	50.0	125.0	155.0	15.0
FVC315	160.0	200.0	250.0	315.0	400.0	-	-	90.0	60.0	140.0	175.0	18.0

RBL chain number	Width between inner plates b1 min mm	Pin diameter d2 max mm	Pin diameter d3 max mm	Bush diameter d5 max mm	Pin length L max mm	Pin length Lc max mm	Plate thickness T max mm	plate depth h2 max mm	Tensile strength Q min kN/LBF
FVC63	22.0	12.0	8.0	18.0	45.0	50.5	4.0	30.0	46.0/I0454
FVC90	25.0	14.0	10.0	20.0	53.0	56.5	5.0	35.0	73.0/16590
FVC112	30.0	16.0	11.0	22.0	62.0	63.0	6.0	40.0	90.0/20454
FVC140	35.0	18.0	12.0	26.0	67.0	68.5	6.0	45.0	110.0/25000
FVC180	45.0	20.0	14.0	30.0	86.0	88.0	8.0	50.0	145.0/32954
FVC250	55.0	26.0	18.0	36.0	97.0	103.5	8.0	60.0	215.0/48863
FVC315	65.0	30.0	20.0	42.0	117.0	121.5	10.0	70.0	295.0/67044

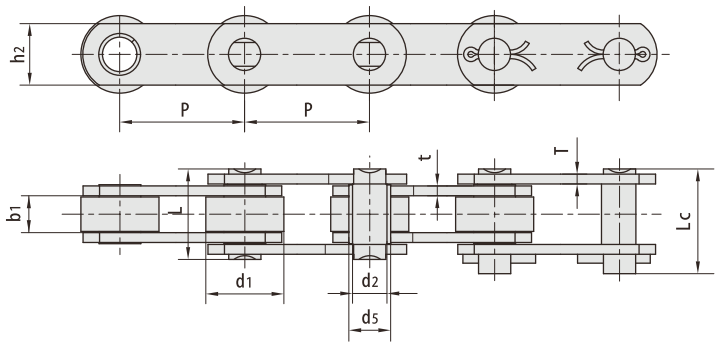

1. Without rollers

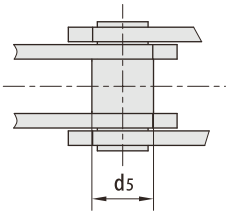

3. With P large rollers

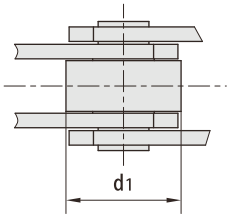

4. With F flanged rollers

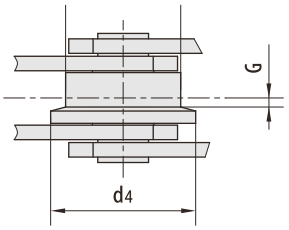

RBL chain number	Pitch P mm							Roller dimension d1 max mm	Roller dimension d4 max mm	Roller dimension G mm	Bush diameter d5 max mm
Z40	50.8	63.5	76.2	88.9	101.6	127.0	152.4	31.75	40.0	2.5	17.0
Z100	76.2	88.9	101.6	127.0	152.4	177.8	203.2	47.50	60.0	3.5	23.0
Z160	101.6	127.0	152.4	177.8	203.2	228.6	254.0	66.70	82.0	3.5	33.0
Z300	152.4	177.8	203.2	254.0	304.8	-	-	88.90	114.0	8.5	38.0

RBL chain number	Width between inner plates b1 min mm	Pin diameter d2 max mm	plate depth h2 max mm	Pin length L max mm	Pin length Lc max mm	Plate thickness t/T mm	Tensile strength Q min kN/LBF	Tensile strength *Q min kN/LBF
Z40	15.0	14.0	25.0	37.0	40.5	4.0	40.0/9091	50.0/11362
Z100	19.0	19.0	40.0	45.0	50.5	5.0/4.0	100.0/22725	130.0/29540
Z160	26.0	26.9	50.0	58.0	63.5	7.0/5.0	156.0/35451	200.0/45454
Z300	38.0	32.0	60.0	84.0	94.0	10.0/8.0	300.0/68175	380.0/86362

*The Q denotes the tensile strength after hardened

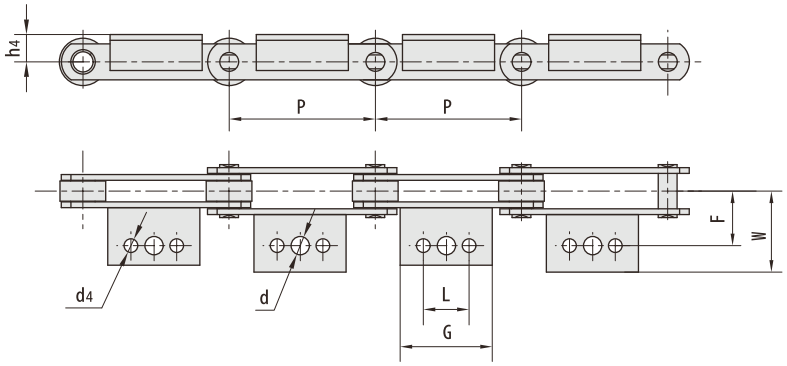

RBL chain number		P mm	L mm	G mm	d mm	d4 mm	F mm	W mm	h4 mm
Z40	△	50.8	-	45.0	10.7	9.3	38.1	64.5	19.0
	△ ✲	63.5	22.2	43.0				56.0	
	△ ✲	76.2						68.0	
	▲	88.9	31.8	50.0				56.0	
	▲	101.6		64.0				55.0	
	▲	127.0	57.2	84.0				56.0	
	▲	152.4							
Z100	△	76.2	-	30.0	14.0	10.5	44.5	65.0	32.0
	△	88.9							
	▲	101.6	31.8	64.0					
	△ ✲	127.0	57.2	84.0					
	▲	152.4		114.5					
	△ ✲	177.8	80.0	110.0					
	△ ✲	203.2							
Z160	△	101.6	-	35.0	15.5	12.3	54.0	77.0	38.0
	△ ✲	127.0	31.7	56.0					
	△ ✲	152.4	57.2	84.0					
	△ ✲	177.8							
	△ ✲	203.2	100.0	130.0					
	△ ✲	228.6		150.0					
	△ ✲	254.0	135.0	170.0					
Z300	△	152.4	38.1	70.0	17.0	14.0	73.0	100.0	51.0
	△	177.8							
	△ ✲	203.2	76.2	100.0					
	△ ✲	254.0	90.0	152.4					
	△ ✲	304.8	190.0	225.0					

*Attachments with 1 hole *Attachments with 2 holes *Attachments with 3 holes

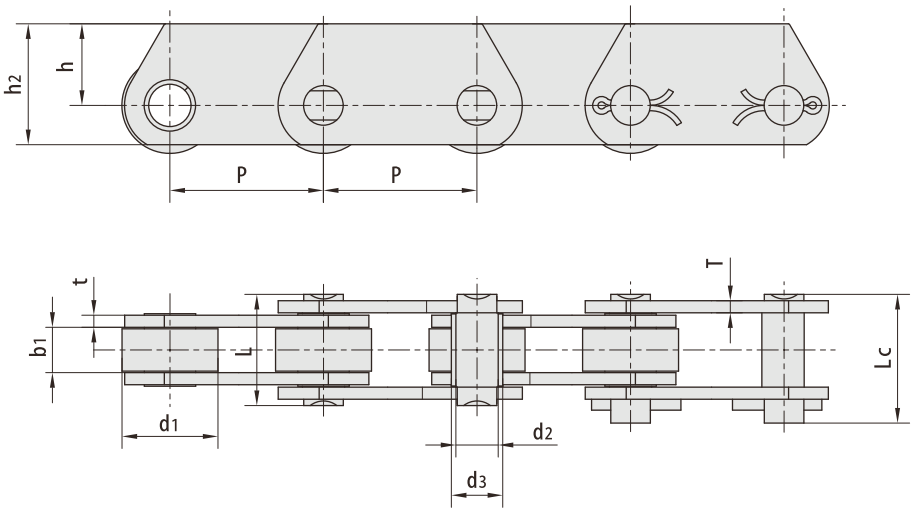

RBL chain number	Pitch P mm							Roller diameter d1 max mm	Pin diameter d4 max mm	Bush diameter d3 max mm
ZE40	50.8	63.5	76.2	88.9	101.6	127.0	152.4	31.75	14.0	17.0
ZE100	76.2	88.9	101.6	127.0	152.4	177.8	203.2	47.50	19.0	23.0
ZE160	101.6	127.0	152.4	177.8	203.2	228.6	254.0	66.70	26.9	33.0
ZE 300	152.4	177.8	203.2	254.0	304.8	-	-	88.90	32.0	38.0

RBL chain number	Width between inner plates b1 min mm	Pin length		plate depth		Plate thickness	Tensile strength	
		L max mm	Lc max mm	h2 max mm	h max mm	t/T mm	Q min kN/LBF	*Q min kN/LBF
ZE40	15.0	37.0	40.5	40.0	27.0	4.0	40.0/9091	60.0/13636
ZE100	19.0	45.0	50.5	50.0	30.0	5.0/4.0	100.0/22725	160.0/36360
ZE160	26.0	58.0	63.5	70.0	45.0	7.0/5.0	160.0/36360	200.0/45454
ZE 300	38.0	84.0	94.0	90.0	60.0	10.0/8.0	300.0/68175	380.0/86362

*The Q denotes the tensile strength after hardened

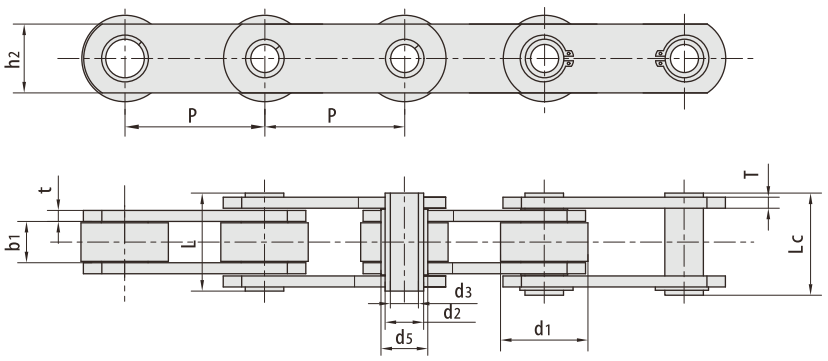

1. Without rollers

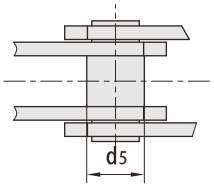

3. With P large rollers

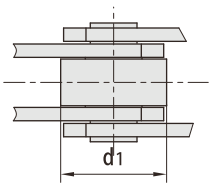

4. With F flanged rollers

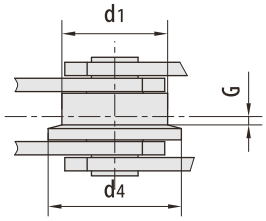

RBL chain number	Pitch P mm							Roller diameter d1 max mm	Roller diameter d4 max mm	Roller diameter G mm	Bush diameter d5 max mm	plate depth h2 max mm
ZC 21	38.1	50.8	63.5	76.2	-	-	-	25.40	-	-	11.0	18.0
ZC40	50.8	63.5	76.2	88.9	101.6	127.0	152.4	31.75	40.0	2.5	17.0	25.0
ZC 60	76.2	88.9	101.6	127.0	152.4	177.8	203.2	47.50	60.0	3.5	23.0	40.0
ZC150	101.6	127.0	152.4	177.8	203.2	228.6	254.0	66.70	82.0	4.0	33.0	50.0
ZC300	152.4	177.8	203.2	254.0	304.8	-	-	88.90	114.0	8.5	38.0	60.0

RBL chain number	Width between inner plates b1 min mm	Pin diameter d2 max mm	Pin diameter d3 min mm	Pin length L max mm	Pin length Lc max mm	Plate thickness t/T mm	Tensile strength Q min kN/LBF	Tensile strength *Q min kN/LBF
ZC21	12.7	9.0	6.5	26.0	27.5	2.5	21.04772	27.1/6159
ZC40	15.0	14.0	10.2	36.4	37.7	4.0	40.0/9091	50.0/11362
ZC60	19.0	19.0	13.2	45.0	46.5	5.0/4.0	60.0/13636	120.0/27270
ZC150	26.0	26.9	20.2	58.0	60.5	7.0/5.0	150.0/34087	190.0/43177
ZC300	38.0	32.0	22.5	83.0	85.0	10.04.0	300.0/68175	380.0/66362

*The Q denotes the tensile strength after hardened

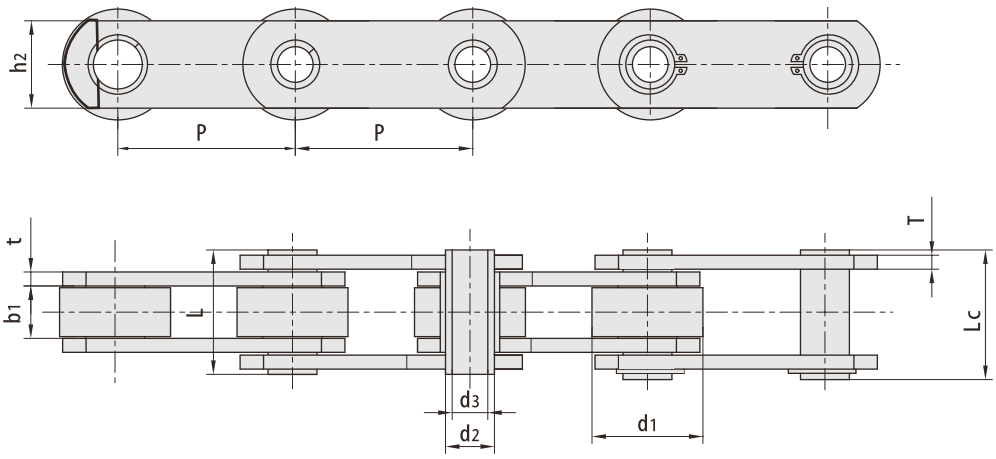

RBL chain number	Pitch	Roller diameter	Width between inner plates	Pin diameter		Pin length		inner plate depth	Plate thickness	Tensile strength	Average Tensile strength	Weight
	P mm	d1 max mm	b1 min mm	d2 max mm	d3 min mm	L max mm	Lc max mm	h2 max mm	t/T mm	Q min kN/LBF	Qo kN	q kg/m
MC18F1P40	40.00	22.00	9.00	9.00	6.20	23.00	24.50	18.0	2.5	21.0/4721	23.1	1.57
MC21F1P76.2	76.20	25.40	12.70	9.00	6.60	26.00	27.50	19.0	2.5	21.0/1721	23.1	1.50
MC28F1P80	80.00	36.00	20.00	12.00	8.50	36.80	38.00	25.0	3.0	42.0/9442	46.0	3.24
*MC28F2B63	63.00	17.50	20.00	13.00	8.20	38.80	40.00	25.0	3.5	28.0/6275	31.0	2.35
MC35F1P35	35.00	20.00	25.00	9.00	6.00	29.00	31.00	20.0	2.5	27.0/6070	30.0	2.08
MC35F2P50	50.00	31.00	15.00	14.00	10.20	35.00	37.00	25.0	4.0	40.0/8992	44.0	3.46
MC37F1P35	35.00	20.00	16.00	14.00	10.40	30.00	31.70	26.0	2.5	37.0/8318	40.0	2.10
MC40PF1100	100.00	35.00	23.40	14.00	10.20	36.00	37.50	25.0	4.0	40.0/8992	44.0	2.79
MC40F9P50	50.00	35.00	17.00	14.00	10.20	37.00	38.50	30.0	4.0	49.0/11015	55.0	5.10
MC40F11P50.8	50.80	38.10	15.50	14.28	10.20	37.00	38.50	27.0	4.0	40.0/8992	44.0	5.00
MC40F21P50.8	50.80	38.10	15.50	14.28	9.70	37.00	-	27.0	4.0	50.0/11241	55.0	5.17
MC40F28P50.8	50.80	38.10	15.80	14.28	9.70	37.00	49.50	27.0	4.0	60.0/13489	66.0	5.10
MC40F29P50.8	50.80	38.10	14.50	13.00	10.05	37.70	39.00	28.0	4.8/4.0	40.0,8992	44.0	4.89
*MC40F24B60	60.00	18.00	22.00	14.00	10.00	43.40	44.50	27.0	4.0	50.0/11240	55.0	3.90
*MC40F12-B75	75.00	20.00	22.00	14.00	10.20	41.00	42.10	30.0	3.0	40.0/8992	44.0	2.48
MC56F1S80	80.00	30.00	24.00	16.00	10.20	45.50	47.00	35.0	4.0	56.0/12600	62.0	4.64
MC56F1P80	80.00	50.00	24.00	16.00	10.20	45.50	47.00	35.0	4.0	56.0/12600	62.0	7.39
MC56F5P80	80.00	50.00	24.00	15.50	10.20	53.50	55.00	35.0	6.0	67.5/15174	75.0	8.50
MC56P85	85.00	50.00	24.00	15.50	10.20	45.50	47.00	35.0	4.0	56.0/12600	62.0	6.91
MC56F2P100	100.00	50.00	23.00	16.00	10.20	45.50	47.00	35.0	4.0	56.0/12600	62.0	6.27

*Bush chain: d1 in the table indicates the external diameter of the bush.

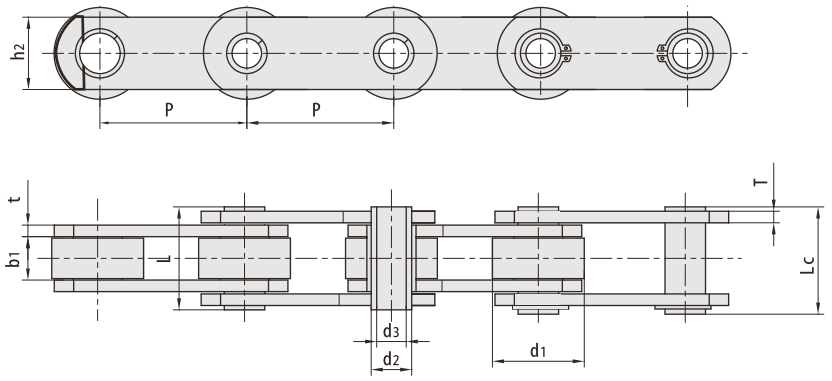

RBL chain number	Pitch	Roller diameter	Width between inner plates	Pin diameter		Pin length		inner plate depth	Plate thickness	Tensile strength	Average Tensile strength	Weight
	P mm	d1 max mm	b1 min mm	d2 max mm	d3 min mm	L max mm	Lc max mm	h2 max mm	t/T mm	Q min kN/LBF	Qo kN	q kg/m
MC56F6P100	100.00	50.00	24.00	15.50	10.20	50.00	51.30	35.0	5.0	56.0/12600	62.0	6.80
MC60F7P152.4	152.40	47.50	19.00	19.00	12.50	45.00	46.50	40.0	5.0/4.0	120.0/27000	132.0	4.97
MC60F7P203.2	203.20	47.50	19.00	19.00	12.50	45.00	46.50	40.0	5.0 A0	120.0/27000	132.0	4.43
MC60F10P127	127.00	47.50	19.00	19.00	13.20	42.00	44.00	40.0	5.0/4.0	60.0/13489	66.0	5.34
MC60F12P88.9	88.90	47.50	19.00	19.00	13.90	45.00	46.50	40.0	5.0/4.0	60.0/13489	66.0	6.38
MC60F14P101.6	101.60	50.00	33.10	19.00	13.20	66.50	68.00	40.0	6.4	100.0/22480	110.0	9.74
MC60F15B101.6	101.60	24.00	19.00	19.00	13.20	45.00	46.50	40.0	5.0/4.0	60.0/13489	66.0	4.19
MC112F1P100	100.00	70.00	32.00	22.00	16.30	67.00	68.50	50.0	6.0	112.0/25195	123.2	14.91
MC220B152.4	152.40	33.00	26.00	27.50	19.43	60.00	61.40	55.0	7.5/5.5	220.0/49484	242.0	7.80
MC150F2P110	110.00	66.70	25.40	26.90	20.20	58.00	60.50	51.0	7.1/5.1	106.7/24003	118.0	13.50
MC300F1F254	254.00	95.00	38.00	46.00	36.00	95.00	97.00	75.0	13.0/8.0	392.0/88126	431.2	22.50
MC300F2F203.2	203.20	88.90	38.00	32.00	19.60	83.00	85.00	60.0	10.0/8.0	300.0/67479	330.0	20.30
*FVC63F1B40	40.00	18.00	22.00	12.00	8.20	47.50	49.00	35.0	5.0	46.0/10348	51.0	5.34
*FVC63F2B50	50.00	17.00	22.00	12.00	8.20	41.00	42.00	25.0	3.0	30.0/6750	33.0	2.24
FVC63F3P63	63.00	40.00	22.00	11.70	8.10	44.00	46.00	30.0	4.0	46.0/10348	51.0	5.83
FVC63F15P63	63.00	40.00	21.50	12.00	8.30	42.00	44.00	30.0	4.0	46.0/10348	51.0	5.85
FVC90F1P63	63.00	42.00	25.00	14.00	10.20	52.00	53.50	35.0	5.0	73.0/16422	80.0	5.33
FVC90F6F125	125.00	63.00	25.00	18.50	14.30	52.00	53.50	35.0	5.0	73.0/16422	80.0	8.20
FVC112F2P100	100.00	95.00	30.00	17.00	11.20	60.20	61.50	40.0	6.0	130.0/29225	143.0	9.69
*FVC140F1B80	80.00	26.00	35.00	18.00	12.50	65.00	67.00	46.0	6.0	110.0/24745	120.0	7.80
FVC140F7F160	160.00	60.00	35.00	18.00	12.00	67.00	69.30	45.0	6.0	110.0/24745	120.0	6.40
FVC140F6P109	109.00	50.00	28.00	18.00	12.00	56.00	57.50	40.0	5.0	60.0/13489	66.0	8.00

*Bush chain: d1 in the table indicates the external diameter of the bush.

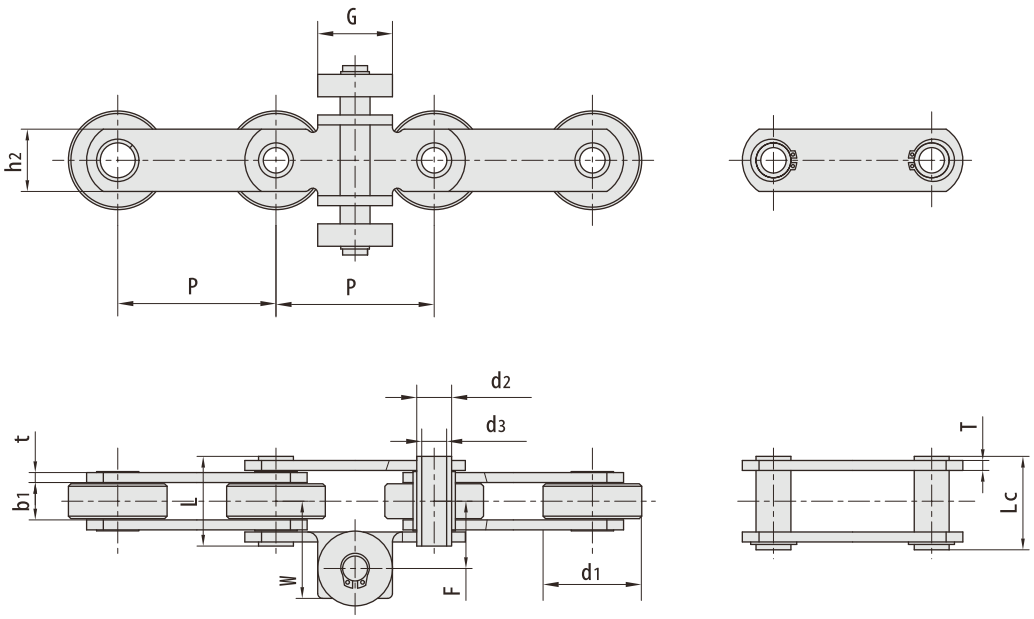

RBL chain number	Pitch	Roller diameter	Width between inner plates	Pin diameter		Pin length		inner plate depth	Plate thickness
	P	d1 max	b1 min	d2 max	d3 min	L max	Lc max	h2 max	t/T max
	mm	mm	mm	mm	mm	mm	mm	mm	mm
MC40F25-P-63.5	63.50	39.60	15.00	14.00	10.00	36.0	37.5	25.00	4.00

RBL chain number	Attachment dimension			Tensile strength	Weight
	F	W	G	Q. min	q
	mm	mm	mm	kN/LBF	kg/m
MC40F25-P-63.5	30.00	42.00	30.00	40.0/8992	4.83

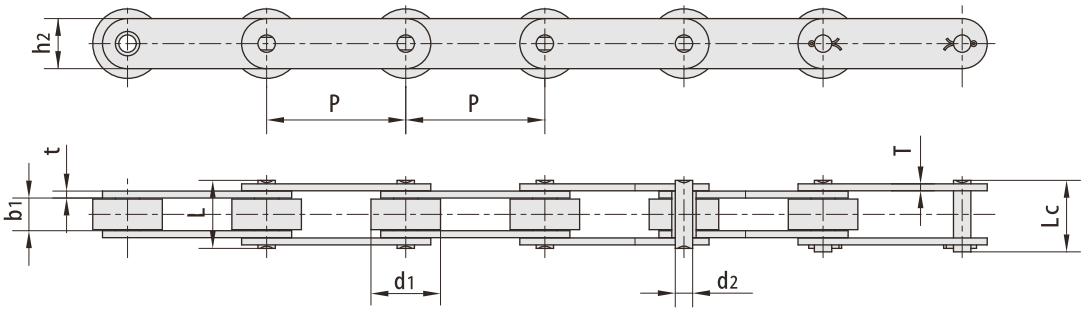

RBL chain number	Pitch	Roller diameter	Width between inner plates	Pin diameter	Pin length		inner plate depth	Plate thickness	Tensile strength	Average Tensile strength	Weight
	P mm	d1 max mm	b1 min mm	d2 max mm	L max mm	Lc max mm	h2 max mm	t/T max mm	Q min kN/LBF	Qo kN	q kg/m
P12.7F15	12.700	8.51	7.30	4.45	16.80	19.20	7.00	1.60	6.0/1349	6.60	0.53
P 15.875	15.875	12.70	11.00	3.66	18.70	19.90	8.00	0.60	3.0/674	3.30	0.80
*P19.05	19.050	12.07	12.50	7.50	31.60	33.60	20.00	4.15/3.25	50.0/11240	55.0	2.56
P19.05F1	19.050	11.91	9.90	5.72	26.00	28.60	17.00	3.00	30.0/6744	33.0	1.84
P19.05F2	19.050	14.25	13.00	7.80	33.20	36.20	19.40	4.00/3.70	40.0/8992	44.0	2.92
P19.05F5	19.050	14.20	12.70	7.10	29.50	31.70	19.00	3.25	30.0/6744	33.0	2.47
P19.05F6	19.050	14.24	12.72	7.80	31.50	31.50	18.80	4.00/3.10	58.8/13218	64.7	2.67
P20F1	20.000	12.00	16.00	6.00	32.10	34.50	18.00	3.00	35.5/7986	39.1	2.11
P22	22.000	14.00	14.00	8.00	37.00	40.00	40.00	5.00/4.00	40.0/8992	44.0	4.10
P22.23F1	22.230	14.00	12.20	6.00	27.50	29.50	17.78	2.80	30.0/6744	33.0	1.80
P25F4	25.000	15.00	18.00	7.00	34.50	37.50	21.00	3.00	45.0/10116	49.5	2.55
P25F5	25.000	15.88	17.02	8.28	36.10	-	21.00	4.15/3.10	60.0/13488	69.0	2.84
P25F7	25.000	11.91	13.00	5.94	26.80	29.20	20.50	2.42	30.0/6744	33.0	1.85
P25.4F5	25.400	14.00	12.70	7.50	30.00	33.00	22.50	3.50/3.00	50.0/11240	55.0	2.47
P25.4F8	25.400	12.70	12.70	7.00	28.50	30.50	20.80	3.00	45.0/10116	49.5	1.89
P25.4F9	25.400	14.00	12.70	7.00	28.50	30.50	19.70	3.00	45.0/10116	49.5	1.88
P25.4F10	25.400	12.00	11.00	5.72	25.80	27.50	17.00	2.60	22.4/5035	25.0	1.66
P26	26.000	15.88	16.15	7.92	33.50	36.80	22.00	3.25	50.0/11240	55.0	2.87
P30	30.000	15.88	17.02	8.28	35.60	38.70	20.00	3.50/3.00	60.0/13488	66.0	2.35
P30F1	30.000	15.88	9.70	8.28	24.80	65.50	22.00	3.10/2.50	45.0/10116	49.5	1.87
P30F7	30.000	15.88	20.00	8.28	39.00	42.50	21.50	4.00/3.25	40.0/8992	44.0	2.72
P30F10	30.000	16.00	20.10	8.28	39.00	42.70	21.20	4.00/3.40	60.0/13488	69.0	2.72
P31.75F12	31.750	19.05	13.00	7.92	29.60	33.40	18.00	3.00	33.8/7598	37.0	2.20
P35F4	35.000	18.00	18.00	8.28	35.40	38.30	24.00	3.00	60.0/13488	66.0	2.51
P35F7	35.000	22.00	22.00	11.00	45.00	50.30	31.00	4.50	84.0/18883	92.4	4.82
P38.1F11	38.100	25.40	21.50	12.00	40.00	43.90	35.00	3.00	70.0/15736	77.0	5.18
P38.1F17	38.100	25.40	23.00	12.00	41.50	46.00	35.00	3.00	70.0/15736	77.0	5.25
P38.1F19	38.100	25.40	22.00	12.00	40.00	43.90	35.00	3.00	70.0/15736	77.0	5.18
P40F9	40.000	18.00	22.00	12.00	47.80	52.50	35.00	5.00	120.0/26977	132.0	5.90
P41F1	41.000	19.05	26.90	10.19	44.10	48.50	27.00	3.00	50.0/11240	55.0	2.87
P41.3F4	41.300	16.00	12.00	9.00	26.30	29.80	22.00	2.00	45.0/10116	49.5	1.72
P41.3F6	41.300	16.00	10.00	9.00	27.00	30.00	21.00	3.00	40.0/8992	44.0	1.80

*Bush chain: d1 in the table indicates the external diameter of the bush.

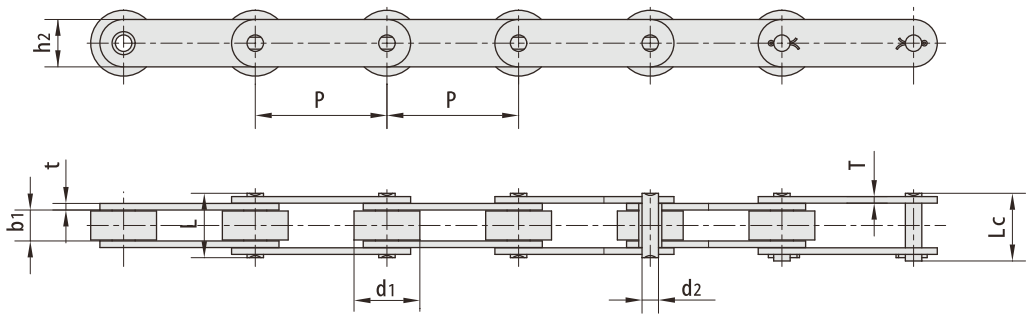

RBL chain number	Pitch	Roller diameter	Width between inner plates	Pin diameter	Pin length		inner plate depth	Plate thickness	Tensile strength	Average Tensile strength	Weight
	P mm	d1 max mm	b1 min mm	d2 max mm	L max mm	Lc max mm	h2 max mm	t/T max mm	Q min kN/LBF	Qo kN	q kg/m
P41.3F11	41.30	16.00	10.00	9.00	26.00	29.50	21.00	3.00	40.0/8992	44.0	1.79
P41.3F12	41.30	16.00	7.80	9.00	21.00	24.00	21.00	2.03	26.7/6002	29.4	1.29
P41.3F13	41.30	16.00	16.00	9.00	33.00	36.50	21.00	3.00	40.0/8992	44.0	2.00
P41.3F17	41.30	16.00	16.00	9.00	33.00	36.50	30.00	3.00	40.0/8992	44.0	2.84
P41.4F2	41.40	15.88	20.40	9.00	38.00	41.50	26.00	3.00	50.0/11240	55.0	2.29
*P41.5F2	41.50	19.00	20.10	9.00	47.90	-	20.00	5.00	55.0/12364	60.5	3.33
P42	42.01	22.23	25.40	11.10	-	55.25	28.50	4.80	100.0/22496	110.0	5.36
P42F1	42.01	22.23	25.40	11.10	50.30	54.30	28.50	4.80	90.0/20232	99.0	5.26
P42F9	42.01	22.35	25.40	11.10	-	57.90	28.50	4.80	90.0/20232	100.0	5.78
P42F10	42.01	22.23	25.40	11.10	-	55.25	28.50	4.80	99.0/22256	110.0	5.50
P44F1	44.00	25.30	25.00	15.90	86.00	88.00	38.00	10.00	250.0/56202	275.0	8.77
P 44.45	44.45	22.23	12.57	5.94	25.90	27.70	18.00	2.42	31.8/7148	35.0	1.73
P 44.45 F1	44.45	22.23	24.70	11.10	62.00	65.50	32.00	6.70	110.0/24728	121.0	7.30
P44.45F18	44.45	25.40	45.22	12.70	74.40	77.40	39.70	5.60	172.4/38756	189.6	9.06
P 44.6 Fl	44.60	25.40	25.22	12.70	54.40	59.00	41.00	5.60	169.0/37991	185.9	7.70
P45F4	45.00	19.05	19.56	9.53	41.20	45.50	30.00	4.00	75.0/16860	82.5	3.93
P49.8	49.80	28.58	31.55	14.27	64.80	69.60	47.80	6.40	222.4/49997	244.6	10.39
P50	50.00	25.40	25.40	14.63	54.30	57.80	40.00	5.00	100/22480	110.0	7.50
P50F1	50.00	29.21	30.99	17.81	-	66.00	42.20	7.00	210.0/47726	231.0	9.68
P50F2	50.00	31.00	14.50	13.20	33.30	37.00	25.00	3.10	44.0/9891	48.4	3.47
P50F7	50.00	24.00	20.00	12.00	51.20	55.50	30.00	6.00	49.0/11023	54.0	5.65
P50F11	50.00	19.05	19.56	10.19	41.30	45.00	28.00	4.50/4.00	95.5/21371	104.5	3.60
P50F14	50.00	24.00	20.00	12.00	43.00	47.50	30.00	4.00	65.0/14612	71.5	5.08
P50F15	50.00	28.58	31.55	14.27	64.80	69.60	47.80	6.40	222.4/49997	244.6	10.38
P50F3	50.00	31.00	15.00	9.53	35.40	38.65	25.00	4.00	83.0/18659	91.3	4.12
P50F21	50.00	25.40	25.40	14.63	54.00	58.00	40.00	5.00	120.0/26977	132.0	7.35
P50F26	50.00	25.00	15.75	7.92	32.70	36.50	22.00	3.30	56.7/12746	62.0	2.50

*Bush chain: d1 in the table indicates the external diameter of the bush.

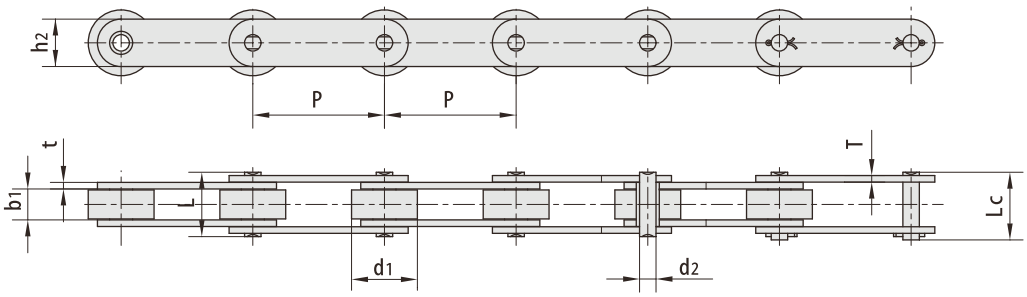

RBL chain number	Pitch	Roller diameter	Width between inner plates	Pin diameter	Pin length		inner plate depth	Plate thickness	Tensile strength	Average Tensile strength	Weight
	P mm	d1 max mm	b1 min mm	d2 max mm	L max mm	Lc max mm	h2 max mm	t/T max mm	Q min kN/LBF	Qo kN	q kg/m
P50F31	50.00	30.00	15.00	12.00	40.30	44.50	30.00	4.50	36.0/8093	39.6	4.89
*P50F36	50.00	19.95	25.00	13.92	52.80	57.00	40.00	5.00	99.0/22255	108.9	6.45
P50F49	50.00	25.40	25.40	14.63	53.40	57.80	50.00	5.00	100.0/22480	110.0	12.60
*P50F58	50.00	20.00	25.40	14.63	54.00	58.00	40.00	5.00	120.0/26976	132.0	6.40
P50.8F1	50.80	30.00	10.00	11.70	30.20	34.50	26.04	4.00	85.0/19108	93.5	3.60
P50.8F12	50.80	30.00	10.00	11.60	28.00	-	26.20	3.50/3.00	70.0/l5736	77.0	2.82
P50.8F16	50.80	35.00	12.00	14.50	40.00	45.50	30.00	5.00	70.0/15736	77.0	5.36
P50.8F31	50.80	31.75	12.70	9.53	31.00	33.50	25.40	3.30	60.0/13488	66.0	3.35
*P50.8F38-B	50.80	25.40	36.50	15.90	80.00	-	44.45	8.00	190.0/42712	209.0	4.14
*P50.8F42	50.80	15.80	17.60	10.00	40.00	44.00	26.00	4.00	60.0/13488	66.0	2.96
P50.8F50	50.80	25.40	25.40	14.00	57.60	63.40	40.00	6.40	200.0/44960	220.0	8.10
P50.8F56	50.80	30.00	10.00	11.60	30.00	34.20	26.20	4.50/3.00	83.0/18658	91.3	3.07
*P50.8F59-B	50.80	18.40	25.40	14.00	58.20	64.70	40.00	6.40	195.0/43836	214.5	7.50
P54F2	54.00	19.05	19.56	10.19	41.30	45.00	26.40	4.50/3.50	95.0/21356	104.5	3.15
P58	58.34	18.00	22.23	9.90	47.60	-	25.00	5.00	80.0/17984	88.0	3.86
P58F1	58.34	18.00	22.23	9.90	51.60	-	30.00	6.00	84.0/18883	92.4	5.16
P60F4	60.00	16.87	19.81	7.19	35.00	38.00	19.30	2.80	39.1/8790	43.0	1.61
P63F20	63.00	11.91	12.57	5.94	28.20	31.00	20.00	3.00	31.1/6991	34.2	2.43
P63.5	63.50	19.05	18.90	9.53	44.60	47.20	28.60	5.00	86.7/19704	95.4	3.77
P63.5F7	63.50	25.00	24.00	10.00	47.00	50.70	35.00	4.00	90.0/20232	99.0	4.35
P63.5F12	63.50	31.80	15.25	14.00	38.00	39.50	26.00	4.00	45.0/10116	49.5	4.03
P63.5F22	63.50	31.80	15.25	14.00	38.00	42.50	26.00	4.00	45.0/10116	49.5	4.03
P63.5F36	63.50	19.05	19.56	10.19	36.50	37.70	27.00	3.00	56.7/12746	62.4	2.60
P66.27F1	66.27	22.22	28.57	11.11	64.30	68.30	28.57	6.35	55.0/12364	60.5	5.19
P66.27F5	66.27	22.35	28.70	11.10	54.60	58.60	28.50	4.80	100.0/22480	110.0	4.23
P66.27F9	66.27	22.35	28.20	11.10	61.20	65.50	28.70	6.40	75.6/16995	83.2	5.50
P69F1	69.85	615.88	17.02	8.28	36.70	39.70	20.60	4.00/3.25	60.8/13668	66.9	1.50
*P69F3	69.85	15.88	17.00	8.28	35.20	38.50	20.60	4.00/3.26	60.8/13669	66.9	1.50
P69.8SF1	69.85	31.75	25.40	14.27	66.40	73.50	34.93	7.90	170.0/38243	187.0	8.76
P75F8-G-2	75.00	31.80	16.10	8.00	40.00	40.00	22.00	3.20	60.8/13668	66.9	2.43
P75F35	75.00	16.00	16.10	8.00	33.30	36.00	22.00	3.20	60.00/l3488	66.0	1.75
P75F53	75.00	15.50	18.00	7.92	35.40	39.10	22.00	3.25	29.40/6609	32.3	1.73

*Bush chain: d1 in the table indicates the external diameter of the bush.

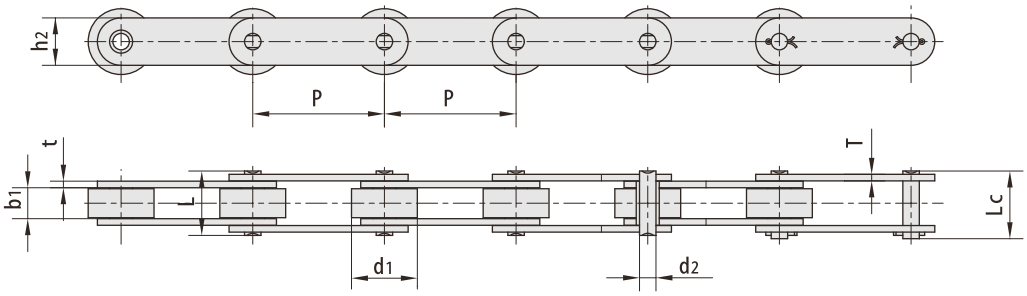

RBL chain number	Pitch	Roller diameter	Width between inner plates	Pin diameter	Pin length		inner plate depth	Plate thickness	Tensile strength	Average Tensile strength	Weight
	P mm	d1 max mm	b1 min mm	d2 max mm	L max mm	Lc max mm	h2 max mm	t/T max mm	Q min kN/LBF	Qo kN	q kg/m
P75F58-S-75	75.00	15.50	18.00	7.92	35.40	39.10	22.00	3.25	29.4/6609	32.3	1.73
P76.2F2	76.20	50.00	26.00	24.00	69.60	74.70	59.50	8.00	350.0/79544	385.0	19.00
P76.2F10	76.20	11.91	11.00	5.94	28.00	30.40	18.50	3.25	31.8/7148	35.0	1.30
P76.2F14	76.20	38.10	25.40	11.10	50.90	55.00	28.60	4.80	85.0/19108	94.0	5.80
P76.2F25	76.20	43.18	49.28	23.90	130.00	130.00	60.45	14.20	697.0/156691	766.7	32.30
P76.2F35	76.20	12.07	13.00	8.10	24.50	26.50	18.00	1.85	29.0/6519	31.9	0.77
P76.2F38	76.20	40.00	25.40	14.70	57.50	62.00	36.00	6.00	116.0/26077	127.0	8.00
P76.2F71	76.20	28.70	31.75	14.20	66.20	72.00	38.10	6.40	180.00Al 200	198.0	7.80
P78.11F11	78.11	31.75	31.75	15.88	86.50	86.50	38.10	9.53	161.6/36329	177.8	11.34
P80F1	80.00	42.00	24.00	15.00	55.00	60.00	60.00	6.00	250.0/56202	275.0	11.90
P80F5	80.00	28.00	34.00	16.00	68.00	72.00	45.00	5.00/8.00	190.0/43181	209.0	8.80
P80F6	80.00	30.00	32.00	15.00	58.60	62.60	60.00	5.00	98.0/22272	108.0	9.75
P80F10	80.00	42.00	22.00	15.00	53.00	58.00	60.00	6.00	250.0/56202	275.0	11.40
P80F37	80.00	26.00	25.00	14.00	59.30	59.30	35.00	6.00/5.00	155.0/34845	170.5	5.72
P80F35	80.00	42.00	23.00	16.00	56.00	61.50	60.00	6.00	160.0/35969	176.0	11.50
P95F3	95.00	30.00	32.00	14.00	-	67.50	41.00	6.00	112.0/25178	123.2	7.20
PI 00H	100.00	20.00	28.00	14.00	-	62.00	40.00	5.00	103.0/23170	113.3	4.99
P100F7	100.00	29.00	30.00	14.50	-	71.00	38.10	6.00	95.0/21356	104.5	6.72
P100F25	100.00	25.40	31.50	14.00	62.60	77.50	38.10	6.00	95.0/21356	104.5	6.17
P100F52	100.00	38.00	18.00	9.53	47.00	49.30	32.00	5.00	86.7/19504	95.3	4.67
P100F53	100.00	52.00	21.00	14.00	46.00	51.00	40.00	5.00/4.00	110.0/24728	121.0	7.45
P100F56	100.00	35.00	13.50	10.00	-	46.00	30.00	5.00	70.0/15736	77.0	3.98
P100F77	100.00	38.00	17.50	11.30	48.00	48.00	32.00	4.50	65.0/14612	71.5	4.42
P100F84	100.00	38.00	22.00	9.50	57.50	57.50	35.00	6.00	70.0/15736	77.0	6.27
P100F92	100.00	60.00	38.00	20.00	81.00	94.00	47.00	8.00	220.0/49457	242.0	16.90
P100F111	100.00	29.00	30.00	14.50	71.00	71.00	38.10	6.00	95.0/21356	104.5	6.75
P100F114	100.00	40.00	23.00	12.00	-	56.00	32.00	6.00	100.0/22480	115.0	5.96
P100F122	100.00	38.00	17.50	11.30	41.80	45.90	32.00	4.50	65.0/14612	71.5	4.33
P100F125	100.00	22.20	22.00	11.30	54.50	58.00	32.00	6.00	110.0/24728	121.0	4.45
P100F161-S	100.00	30.00	31.60	15.90	-	80.00	38.10	8.00	130.0/29225	143.0	8.50
P100F166	100.00	25.00	30.00	14.50	-	71.00	38.10	6.00	95.0/21356	105.0	6.36
P100F196	100.00	38.00	18.00	10.00	-	51.50	29.00	5.60	100.0/22480	110.0	4.80

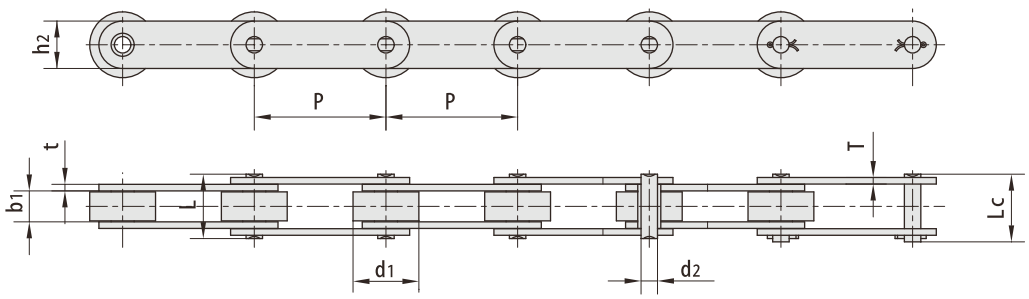

RBL chain number	Pitch P mm	Roller diameter d1 max mm	Width between inner plates b1 min mm	Pin diameter d2 max mm	Pin length L max mm	Pin length Lc max mm	inner plate depth h2 max mm	Plate thickness t/T max mm	Tensile strength Q min kN/LBF	Average Tensile strength Qo kN	Weight q kg/m
P100F223	100.00	29.00	30.00	14.50	-	71.00	38.10	6.00	225.0/50580	247.5	9.46
P100F248	100.00	50.00	24.00	15.00	-	52.00	35.00	4.00	100.0/22480	110.0	6.40
P100F250	100.00	15.88	19.00	7.92	37.40	40.00	26.00	3.20	30.0/6744	33.0	1.86
PI 00F268	100.00	22.20	22.00	11.30	-	51.00	32.00	4.50	65.0/14612	71.5	3.60
P100F279	100.00	50.00	33.00	14.00	-	70.00	62.00	6.00	112.0/25177	123.2	14.33
P100F355	100.00	15.88	16.00	8.30	35.00	48.00	22.00	3.25	32.0/7194	35.2	3.00
P100F360	100.00	20.00	25.00	14.00	60.60	65.80	35.00	6.00	120.0/26976	132.0	5.58
P101.6F4	101.60	66.70	25.40	26.90	59.20	80.00	51.00	7.10/5.10	134.0/30454	147.4	15.70
P101.6F18	101.60	31.75	15.00	10.00	37.00	41.00	25.00	4.00	40.0/8992	44.0	2.79
P101.6F19	101.60	28.58	25.40	14.27	60.00	64.60	38.10	6.40	160.0/35968	176.0	6.60
P101.6F24	101.60	47.60	22.20	11.11	47.80	52.20	32.00	4.50	75.0/16872	82.5	5.80
P101.6F46	101.60	50.80	29.40	17.50	72.00	77.00	44.50	7.90	177.9/40013	197.4	12.56
P101.6F51	101.60	44.45	28.70	11.10	54.50	60.80	28.70	4.80	53.7/12080	59.0	6.17
P101.6F69	101.60	38.10	23.80	12.70	-	65.10	33.00	6.40	100.0/22480	110.8	6.50
P101.6F71	101.60	38.10	25.40	11.10	51.10	55.20	28.70	4.80	552.5/11810	57.8	4.95
P 101.6F73	101.60	47.60	19.10	19.00	53.60	58.00	38.10	6.00	66.7/15000	73.4	7.52
P 101.6F80-S	101.60	30.00	31.60	15.90	-	80.00	38.10	8.00	130.0/29225	150.0	7.20
P 101.6F106	101.60	57.15	55.80	30.16	-	136.00	86.00	14.00	1100.0/247289	1255.0	46.00
P101.6F157	101.60	44.45	33.27	15.88	-	82.60	38.10	7.90	113.2/25447	124.5	10.70
P101.6F160-F	101.60	70.00	42.00	20.00	86.50	95.00	50.00	9.00	240.0/53952	264.0	23.50
P101.6F166	101.60	28.50	30.90	14.50	-	70.00	38.00	6.50	150.0/33700	165.0	6.70
P101.6F167	101.60	31.75	37.50	15.90	-	84.00	38.00	8.00	195.0/44000	214.5	8.90
P101.6F184	101.60	31.80	31.60	15.90	-	81.00	38.10	8.00	130.0/29224	143.0	7.10
P103.2F3	103.20	44.45	49.00	27.94	-	132.00	60.00	14.30	700.0/157366	770.0	27.88
P103.2F6	103.20	44.45	52.00	25.00	116.70	120.35	60.00	14.5/12.0	650.0/146120	715.0	30.30
P 103.45	103.45	45.21	32.51	23.88	99.00	109.00	63.50	12.70	500.0/112480	535.0	25.00
P 103.89	103.89	66.68	57.15	33.32	-	148.00	88.90	15.88	500.0/112480	550.0	55.83
P120.9F3	120.90	44.30	49.20	25.00	-	131.00	58.10	14.5/13.2	700.0/157360	770.0	24.42
P125F1	125.00	50.00	55.00	26.00	-	110.00	60.00	8.00	300.0/68181	330.0	13.53
P125F2H	125.00	32.00	18.50	8.00	-	43.00	20.00	4.00	60.0/13488	66.0	2.65
P127F1	127.00	76.20	76.20	38.10	-	186.50	101.60	19.30	1690.0/380178	1860.0	73.85
P127F9	127.00	66.70	26.00	26.90	60.50	87.00	50.00	7.0/5.0	156.0/35069	171.6	10.00

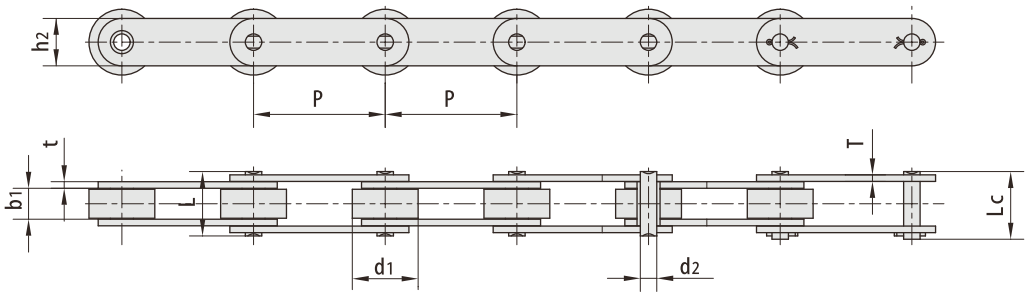

RBL chain number	Pitch	Roller diameter	Width between inner plates	Pin diameter	Pin length		inner plate depth	Plate thickness	Tensile strength	Average Tensile strength	Weight
	P mm	d1 max mm	b1 min mm	d2 max mm	L max mm	Lc max mm	h2 max mm	t/T max mm	Q min kN/LBF	Qo kN	q kg/m
P127F10	127.00	76.20	86.20	38.10	-	185.50	101.60	19.05	1690.0/379912	1868.0	73.48
P127F13	127.00	63.50	64.70	35.00	-	169.50	88.90	19.05	860.0/193328	946.0	55.80
*P135F6	135.00	28.00	38.00	17.90	-	98.00	50.00	9.50	350.0/78680	385.0	12.08
P150F10	150.00	29.00	30.00	14.00	-	71.00	40.00	6.00	180.0/40492	198.0	5.71
P150F15	150.00	46.00	70.00	18.00	-	133.00	54.00	10.00	200.0/44961	220.0	17.25
P150F43	150.00	22.20	22.00	11.10	-	57.40	31.80	6.00	100.0/22480	115.0	4.10
P150F44	150.00	46.00	60.00	26.00	-	127.00	60.00	10.00	360.0/80931	415.0	18.45
P150F51	150.00	75.00	42.00	25.40	-	107.00	64.00	10.00	310.0/69688	341.0	24.60
P150F76	150.00	22.20	25.00	11.10	-	55.80	31.80	4.80	100.0/22480	115.0	3.43
P150F79	150.00	46.00	70.00	26.00	-	133.00	60.00	10.00	360.0/80931	414.0	19.00
P150F93	150.00	29.00	30.00	14.00	-	71.00	40.00	6.00	180.0/40464	198.0	5.69
*P150F98	150.00	46.00	70.00	30.00	-	153.00	80.00	12.00	600.0/134880	660.0	28.45
RF10150-S	150.00	29.00	30.00	14.50	-	69.00	38.10	6.30	102.5/23295	112.7	6.00
P 150.5	150.50	38.12	40.81	16.02	83.50	88.00	44.23	8.50	250.0/56817	275.0	10.00
P152F5	152.40	66.70	25.40	26.90	59.20	80.00	50.00	7.10/5.10	134.0/30454	147.4	12.10
P152F10	152.40	57.20	37.10	15.90	76.80	87.00	44.50	7.90	190.0/43181	209.0	11.29
P152F28	152.40	88.90	38.00	31.80	82.00	89.00	61.00	8.90/7.60	200.0/44961	220.0	23.30
P152F35	152.40	88.90	38.00	23.00	82.00	87.05	61.00	8.90/7.60	266.7/60000	293.4	22.65
P152F37	152.40	66.70	25.40	26.92	64.00	83.50	50.80	7.80/6.50	120.0/27000	132.0	12.22
P152F39	152.40	47.60	19.00	19.00	53.60	58.00	38.10	6.30	120.0/27000	132.0	6.26
P152F42	152.40	63.50	34.90	19.00	-	93.00	50.80	9.50	152.0/34194	168.9	15.80
P152F49	152.40	63.50	34.00	15.60	-	82.00	65.00	8.00	160.0/35993	176.0	16.30
P152F67	152.40	88.90	101.00	47.63	-	228.70	114.30	22.00	1350.0/303696	1445.0	101.30
P152F100	152.40	69.90	38.80	19.00	-	95.50	50.80	9.50	152.0/34194	168.9	17.76
P152F136	152.40	36.00	37.00	18.00	-	79.50	50.00	8.00	280.0/62946	308.0	10.00
P152F173	152.40	88.90	80.90	45.00	-	205.00	127.00	22.00	1810.0/406888	1991.0	105.00
*P152F210	152.40	32.00	26.00	24.00	62.40	72.00	51.00	7.00	180.0/40464	198.0	9.10
P152F52-BRSS	152.40	50.80	28.50	11.10	-	66.60	31.80	6.40	70.0/15736	80.0	6.70
*P154F1	154.00	44.50	85.60	28.60	-	150.00	80.00	12.50	500.0/112480	550.0	31.00
P155F1	155.00	55.00	35.00	20.00	74.00	81.30	48.00	8.00	180.0/40464	198.0	11.82
P160F15	160.00	64.00	37.00	15.00	-	100.40	45.00	8.50	160.0/35993	176.0	13.10
P160F16	160.00	69.85	38.10	27.00	-	101.00	50.80	9.00/8.00	267.0/60064	296.4	16.60

*Bush chain: d1 in the table indicates the external diameter of the bush.

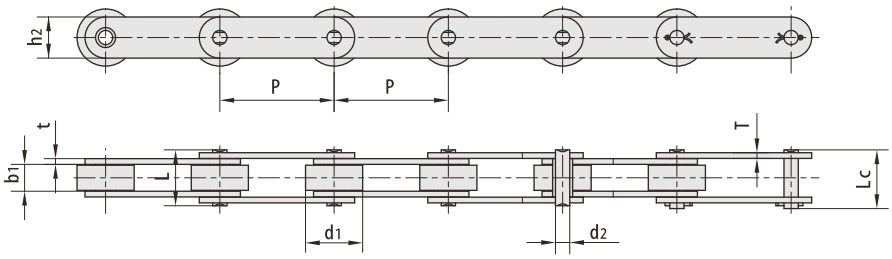

RBL chain number	Pitch	Roller diameter	Width between inner	Pin diameter	Pin length		inner plate depth	Plate thickness	Tensile strength	Average Tensile strength	Weight
	P mm	d1 max mm	b1 min mm	d2 max mm	L max mm	Lc max mm	h2 max mm	t/T max mm	Q min kN/LBF	Qo kN	q kg/m
P160F27	160.00	69.85	38.10	17.53	-	81.00	50.80	6.30	244.0/54890	268.4	13.68
P160F48	160.00	30.00	39.00	15.90	-	88.00	50.00	8.00	200.0/44962	220.0	9.72
P160F85	160.00	25.00	35.30	12.70	68.40	73.00	40.00	6.40	169.0/37993	185.9	5.76
P177.8F6	177.80	88.90	81.00	44.45	-	218.50	127.00	25.00	1710.0/384408	1881.0	105.50
P200F10	200.00	100.00	47.00	25.00	-	103.50	72.00	10.00	308.7/69445	339.6	28.30
P200F15	200.00	40.10	51.40	19.10	-	109.50	50.80	9.50	213.0/47916	236.4	12.58
P200F58	200.00	44.00	44.00	19.10	-	91.50	50.80	7.00	200.044961	230.0	9.82
P200F86	200.00	80.00	41.00	30.00	-	129.00	60.00	16.00	300.0/67443	330.0	28.53
P203.2F18	203.20	66.70	26.00	26.90	60.50	65.50	50.00	7.00/5.00	156.0/35069	171.6	10.00
P203.2F20	203.20	66.70	25.40	27.00	63.50	92.00	50.00	8.00/6.00	156.0/35069	171.6	13.00
P228.6F9	228.60	107.95	77.70	31.75	-	173.60	88.90	16.00	598.0/134526	657.0	56.70
P250F36	250.00	100.00	57.20	22.23	-	117.00	63.50	9.50	314.0/70637	348.5	25.70
P250F39	250.00	44.00	44.00	19.00	-	92.00	50.00	7.00	200.0/44961	242.0	8.92
P250F79	250.00	57.20	66.70	25.40	-	146.00	76.20	12.70	619.0/139151	681.0	24.74
P250F85	250.00	64.80	37.00	16.00	-	84.50	45.00	8.00	160.0/35968	176.0	10.12

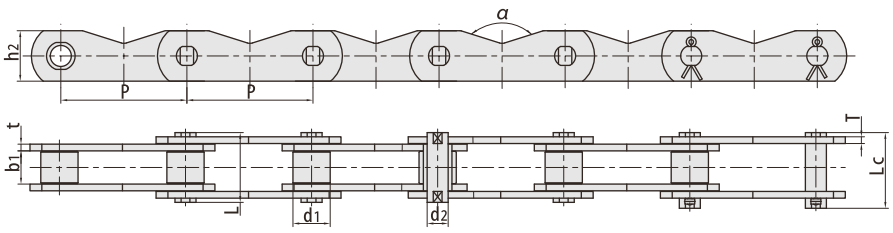

RBL chain number	Pitch	Roller diameter	Width between inner plates	Pin diameter	Pin length		Plate dimension			Tensile strength	Average Tensile strength	Weight
	P mm	d1 max mm	b1 min mm	d2 max mm	L max mm	Lc max mm	h2 max mm	t/T max mm	a	Q min kN/LBF	Qo kN	q kg/m
P31.75F11	31.75	19.05	9.40	5.08	20.70	23.30	19.00	2.00	-	21.80/4900	25.00	1.55
P76.2F60	76.20	40.00	25.40	12.00	52.70	55.80	43.00	5.6Z4.8	142.92°	161.00/39413	177.10	7.90
P150F100	150.00	48.00	39.50	25.00	83.80	91.00	60.00	8.00	145.00°	400.00/89920	440.00	13.90
P160F73	160.00	70.00	38.00	20.00	75.00	86.00	70.00	7.20	-	150.00/33723	165.00	17.20

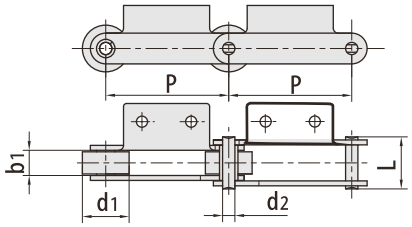

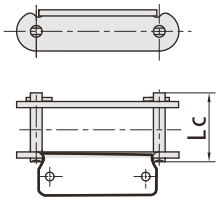

RBL chain number	Pitch	Roller diameter	Width between inner plates	Pin diameter	Pin length		Tensile strength	Average Tensile strength	Weight
	P mm	d1 max mm	b1 min mm	d2 max mm	L max mm	Lc max mm	Q min kN/LBF	Qo kN	q kg/m
P13.7K1	13.700	8.51	7.75	4.450	16.70	19.30	17.8/4000	20.00	0.79
P14.85K1	14.850	10.16	9.40	5.080	20.70	23.30	20.0/4496	22.00	1.34
P16.7F1K 1	16.700	10.16	9.40	5.080	20.70	23.30	21.8/4900	24.00	1.50
*P28	28.575	11.68	16.00	7.870	-	32.40	50.0/11240	55.00	2.66
*P28F1	28.575	11.68	16.13	7.870	-	32.40	50.0/11240	55.00	2.60
P36.67A2	36.670	11.91	12.57	5.940	25.90	28.30	31.8/7149	34.98	1.26
P38F10K1	38.000	15.88	13.00	8.280	32.50	35.50	55.0/12364	60.50	2.60
P38F11KI	38.000	15.88	13.00	8.280	30.50	33.50	45.0/10116	49.50	2.30
P38F13K1	38.000	15.88	13.00	8.280	32.50	35.50	55.0/I2364	60.50	2.60
P38.1F2	38.100	22.50	13.00	8.000	29.50	33.30	40.0/8992	44.00	2.42
P38.1F25A1	38.100	18.00	15.00	8.280	36.10	39.10	68.0/I5287	75.00	3.00
P38.1F25A2	38.100	23.80	15.00	8.280	36.10	39.10	68.0/15286	74.80	3.38
P38.1F31	38.100	15.88	15.75	7.920	36.20	38.90	55.0/I2364	60.50	3.46
P38.1F32	38.100	15.88	15.75	7.920	36.20	38.90	55.0/I2364	60.50	3.38
P39.75A1	39.750	17.25	22.00	7.800	40.50	44.30	47.0/I0566	51.70	3.10
P39.75A2F2	39.750	22.23	13.00	5.940	29.20	31.00	32.0/7194	35.20	2.23
P40F12A2	40.000	22.23	13.00	5.940	29.20	31.00	32.0/7194	35.20	2.23
P41.3F9A2	41.300	22.00	11.00	9.000	28.60	31.60	40.0/8992	44.00	2.30
P41.3F14A2	41.275	22.22	12.70	5.940	29.20	31.60	30.0/6744	33.00	2.22
P42F2	42.000	11.00	13.00	6.000	30.00	32.50	50.0/11240	55.00	1.85
P42F13A1	42.010	22.23	25.40	9.530	48.50	-	55.0/I2364	60.50	4.60
P42.5	42.500	15.88	15.75	7.920	32.70	36.50	56.7/I2746	62.00	3.40
P44F3A2	44.000	15.88	17.02	8.280	36.10	39.10	60.0/13488	66.00	2.32
P 44.45 F 5	44.450	25.40	16.51	7.920	36.20	38.90	35.0/7874	38.50	3.85
P44.45F7A1	44.450	28.58	15.00	9.530	34.50	38.70	45.0/10116	49.50	3.80
P44.45F12K2	44.450	25.40	25.40	12.700	54.40	59.00	170.0/38216	187.00	7.84
P44.45F15K2	44.450	25.40	25.40	12.700	60.00	-	170.0/38216	187.00	8.34
P46	46.000	16.00	16.00	8.000	36.00	39.00	55.0/12364	60.50	3.23
P49F2A1	49.000	31.00	23.00	9.800	36.60	42.00	40.0/8992	44.00	5.51
P50F3A1	50.000	31.00	15.00	9.530	35.40	38.65	83.0/18659	91.30	4.77
P50F16	50.000	24.90	10.07	7.800	26.60	28.80	30.0/7418	36.30	2.22
P50F27A1	50.000	31.00	15.00	9.800	36.60	42.00	40.0/8992	44.00	5.30
P50F42A1	50.000	29.00	15.00	9.800	36.60	42.00	40.0/8992	44.00	4.03
P50F53A2	50.000	31.00	15.50	10.000	37.10	40.00	40.0/8992	44.00	4.00

*Bush chain: d1 in the table indicates the external diameter of the bush.

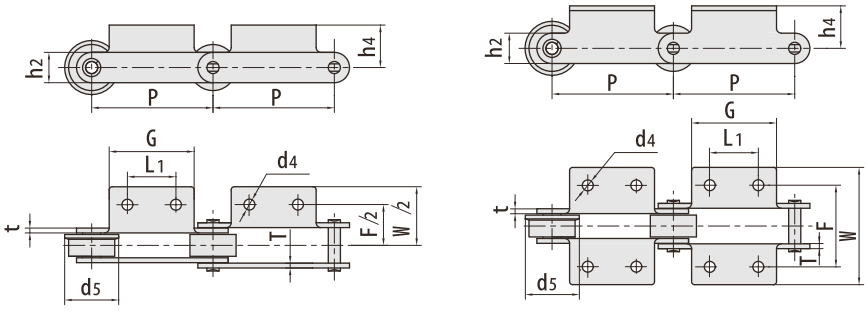

RBL chain number	P mm	L1 mm	G mm	F mm	W mm	h4 mm	h2 mm	d4 mm	t/t mm	d5 mm
P13.7K1	13.700	△	9.50	29.00	38.70	7.10	11.80	4.50	1.60	-
P 14.85K1	14.850	△	14.85	30.00	38.00	10.00	14.50	3.50	2.03	-
P 16.7F1K 1	16.700	△	12.70	31.80	44.60	10.30	14.60	5.20	2.03	-
P28	28.575	28.58	51.00	46.74	61.20	13.70	22.23	8.75	3.10	-
P28F1	28.575	28.58	50.80	46.80	61.86	12.70	22.23	9.02	3.10	-
P36.67A2	36.670	14.30	28.60	42.90	67.80	14.70	18.00	5.50	2.42	-
P38F10K1	38.000	△	30.00	49.00	79.00	16.50	21.00	8.40	3.50	-
P38F11K1	38.000	△	30.00	47.00	77.00	16.50	21.00	8.40	3.00	-
P38F13K1	38.000	△	30.00	49.00	79.00	16.50	16.50	7.00	3.50	-
P38.1F2	38.100	△	28.00	56.00	76.00	17.20	19.00	9.00	3.00	-
P38.1F25A1	38.100	△	28.00	51.00	71.00	15.00	21.00	8.40	4.00	-
P38.1F25A2	38.100	50.00	70.00	48.00	68.00	15.00	21.00	7.00	4.00	-
P 38.1 F 31	38.100	△	61.10	54.20	81.60	14.70	23.00	8.20	4.00	-
P 38.1 F 32	38.100	△	61.10	61.00	81.60	14.70	23.00	10.20	4.00	-
P39.75A1	39.750	△	61.00	62.10	94.10	16.50	21.25	11X8	3.50	-
P39.75A2F2	39.750	14.30	28.60	42.40	57.20	14.70	17.00	5.20	3.10	-
P40F12A2	40.000	14.30	28.60	42.90	57.20	14.70	17.00	5.20	3.10	-
P41.3F9A2	41.300	12.00	24.00	36.20	48.20	17.00	21.00	5.50	3.00	-
P41.3F14A2	41.275	14.30	28.60	42.90	61.20	14.70	17.50	5.20	3.25	-
P42F2	42.000	△	35.00	40.00	76.00	12.80	17.00	6.00	3.00	-
P42F13A1	42.010	△	31.75	60.00	84.20	18.00	28.58	8.26X16	3.25	-
P42.5	42.500	19.00	38.00	53.50	70.00	19.50	22.00	7.00	3.25	-
P44F3A2	44.000	26.00	44.00	50.80	68.00	19.10	21.00	6.60	4.15/3.10	-
P44.45F5	44.450	△	34.93	57.16	74.46	19.05	19.05	8.00	3.80	-
P 44.45 F7A1	44.450	△	22.00	66.00	84.80	12.80	25.60	7.00	3.00	-
P44.45F12K2	44.450	42.00	82.00	69.00	97.30	25.00	36.80	10.80	6.00/5.00	-
P44.45F15K2	44.450	42.00	82.00	69.00	97.30	25.00	36.80	10.80	6.00/5.00	-
P46	46.000	△	38.00	54.00	82.80	18.00	22.00	6.00	4.00	-
P49F2A1	49.000	△	45.00	62.00	86.00	35.00	25.00	10.00	4.00	-
P50F3A1	50.000	△	60.00	63.00	98.00	19.10	25.00	10.00	4.00	-
P50F16	50.000	△	41.30	45.00	61.40	36.00	20.00	6.50	3.00	-
P50F27A1	50.000	△	45.00	62.00	86.00	35.00	25.00	10.00	4.00	-
P50F42A1	50.000	△	29.00	55.00	72.00	12.50	25.00	7.00	4.00	-
P50F53A2	50.000	20.00	40.00	58.40	74.40	21.00	25.00	8.20	4.00	-

*Attachments with 1 hole

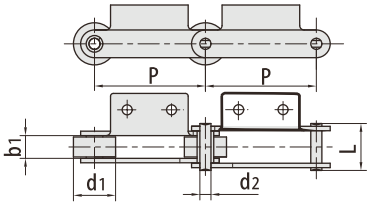

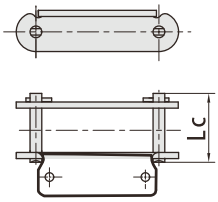

RBL chain number	Pitch	Roller diameter	Width between inner plates	Pin diameter	Pin length		Tensile strength	Average Tensile strength	Weight
	P mm	d1 max mm	b1 min mm	d2 max mm	L max mm	Lc max mm	Q min kN/LBF	Qo kN	q kg/m
P50.8F22A1-F	50.80	32.00	15.00	11.700	39.00	43.00	50.0/11240	55.00	6.13
P50.8F35A1	50.80	25.00	12.57	5.940	25.90	29.00	31.8/7150	35.00	2.20
P50.8F40	50.80	28.60	30.60	10.190	57.00	62.00	70.0/15736	77.00	7.55
P50.8F65K1	50.80	16.00	17.00	8.000	37.60	40.70	56.7/12746	62.37	3.90
P58F2A2	58.00	15.88	17.02	8.280	36.10	39.10	60.0/13488	66.00	2.46
P60A2F16	60.00	15.88	17.02	8.280	36.10	39.10	60.0/13488	66.00	2.48
P62.5A3F1	62.50	48.00	25.00	14.000	53.40	57.50	90.0/20232	99.00	10.60
P63F30K1	63.00	42.00	24.00	10.000	46.00	49.50	85.0/19108	93.50	7.67
P68.25F1	68.25	30.00	15.00	14.000	40.30	44.70	70.0/15736	77.00	4.19
P69F4A1	69.00	30.00	12.50	9.530	30.00	34.00	45.0/10116	50.00	3.18
P69F5A1	69.00	25.00	11.50	5.720	28.00	30.20	18.0/4046	19.80	2.38
P70F29	70.00	40.00	19.00	10.000	37.10	41.00	57.0/12814	62.70	4.84
P75F6	75.00	16.00	16.00	8.000	-	41.00	32.0/7200	35.20	2.44
P75F8A2	75.00	31.80	16.00	8.000	-	41.00	32.0/7200	35.20	3.52
P75F8A2-F	75.00	30.00	16.00	8.000	-	41.00	32.0/7200	35.20	3.80
P75F20A1	75.00	40.00	22.00	12.000	47.0	52.00	90.0/20232	99.00	6.81
P75F23	75.00	28.00	24.40	11.100	-	61.50	140.0/31473	154.00	4.49
P75F27A2	75.00	45.00	22.00	11.000	-	51.40	62.3/14005	68.00	7.43
P75F34A1	75.00	40.00	22.00	12.000	47.00	52.00	90.0/20232	99.00	6.71
P75F34A2	75.00	40.00	22.00	12.000	47.00	52.00	75.0/16860	82.50	6.86
P75F38K2	75.00	22.20	22.00	11.300	-	53.50	62.7/14095	69.00	4.70
P75F56A1	75.00	38.00	22.00	12.000	47.00	52.00	90.0/20232	99.00	6.04
P75F57A2	75.00	15.75	16.00	8.000	-	41.00	32.0/7194	35.20	1.82
P75F63A2	75.00	40.00	21.50	12.000	45.70	49.00	100.0/22480	110.00	6.20
*P76F1K1	76.00	32.00	35.00	16.000	-	77.00	240.0/53954	265.00	12.10
P76.2F1	76.20	31.75	15.00	14.200	-	44.20	60.0/13488	66.00	4.45
P76.2F41K1	76.20	38.10	25.40	11.100	-	57.50	80.0/17984	88.00	7.40
P76.2F42K1	76.20	38.10	25.40	11.100	-	60.70	120.0/26977	132.00	7.94
P76.2F14A3	76.20	38.10	25.40	11.100	-	56.50	85.0/19108	93.50	6.10
P76.2F43	76.20	31.74	15.88	7.940	33.10	36.20	54.5/12252	59.95	3.28
P76.2F69A2	76.20	40.00	32.00	12.500	57.90	62.30	100.0/22480	110.00	9.21
P78F2K2	78.00	32.00	37.00	15.000	-	83.20	210.0/47208	231.00	10.90
P78F3K2	78.00	32.00	37.00	18.000	-	94.00	350.0/78680	385.00	15.90
P78.1F5K2	78.10	31.75	38.10	16.460	-	95.00	250.0/56200	275.00	14.50

*Bush chain: d1 in the table indicates the external diameter of the bush.

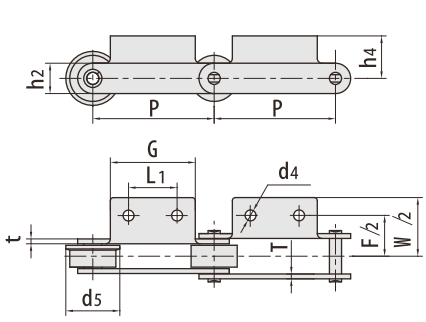

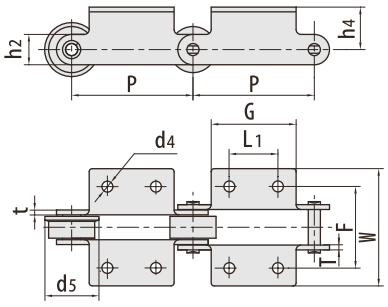

RBL chain number	P mm	L1 mm	G mm	F mm	W mm	h4 mm	h2 mm	d4 mm	t/t mm	d5 mm
P50.8F22A1-F	50.80	△	45.00	75.00	110.40	20.00	26.40	9.00	4.50	40.00
P50.8F35A1	50.80	△	48.00	46.00	68.00	26.00	18.00	8.00	2.50	
P50.8F40	50.80	-	40.00	-	90.00	22.50	30.00	-	4.50	
P50.8F65K1	50.80	△	30.00	55.60	84.00	16.00	25.00	8.70	4.00	
P58F2A2	58.00	26.00	44.00	66.80	84.00	19.10	21.00	6.60	4.15/3.10	
P60A2F16	60.00	26.00	44.00	66.80	84.00	19.10	21.00	6.60	4.15/3.10	
P62.5A3F1	62.50	40.00	65.00	90.00	130.00	26.00	35.00	11.00	5.00	
P63F30K1	63.00	△	22.00	88.00	112.00	30.00	31.00	10.00	4.00	
P68.25F1	68.25	40.00	70.00	54.00	84.00	21.50	27.00	8.40	4.50	
P69F4A1	69.00	△	60.00	60.00	80.00	27.00	25.00	9.00	3.00	
P69F5A1	69.00	△	66.00	48.00	68.00	27.00	15.00	6.50	3.00	
P70F29	70.00	△	34.00	60.00	87.00	15.00	30.00	10.30	3.00	
P75F6	75.00	30.00	55.00	60.00	92.00	20.00	22.00	10.00	3.00	
P75F8A2	75.00	30.00	55.00	60.00	92.00	20.00	22.00	10.00	3.20	
P75F8A2-F	75.00	30.00	55.00	60.00	92.00	20.00	22.00	10.00	3.20	38.00
P75F20A1	75.00	△	55.00	64.00	92.00	25.00	32.00	M 8	4.50	50.00
P75F23	75.00	40.00	60.00	88.00	118.00	37.00	30.00	9.00	6.00	-
P75F27A2	75.00	35.00	60.00	70.00	110.90	22.00	32.00	10.00	4.50/4.00	-
P75F34A1	75.00	△	55.00	70.00	90.00	25.00	32.00	M 8	4.50	50.00
P75F34A2	75.00	30.00	56.00	62.40	102.40	22.00	32.00	M 5	4.50	50.00
P75F38K2	75.00	30.00	55.00	70.00	94.00	22.00	32.00	10.00	4.50	-
P75F56A1	75.00	△	45.00	69.00	99.00	25.00	32.00	9.00	4.50	45.00
P75F57A2	75.00	30.00	55.00	66.00	98.00	19.58	22.00	10.00	3.20	-
P75F63A2	75.00	25.00	55.50	71.20	94.00	22.00	32.00	M 8	4.00	-
P76F1K1	76.00	△	50.00	109.20	149.20	35.00	50.00	11.00	6.00	-
P76.2F1	76.20	31.00	58.00	75.40	107.00	21.25	29.00	10.50	4.50	-
P76.2F41K1	76.20	△	51.00	75.00	100.00	39.55	30.20	8.60	4.80	-
P76.2F42K1	76.20	△	50.80	74.60	101.60	20.60	28.60	8.70	4.80/6.40	-
P76.2F14A3	76.20	28.60	50.80	76.20	104.60	19.10	28.60	6.40	4.80	-
P76.2F43	76.20	25.40	56.00	70.00	98.00	18.00	25.40	8.50	3.15	-
P76.2F69A2	76.20	43.00	67.40	98.20	117.00	22.70	32.80	8.80	5.00	50.00
P78F2K2	78.00	30.00	65.00	120.00	150.00	32.00	38.10	13.00	8.00	-
P78F3K2	78.00	30.00	65.00	120.00	150.00	34.00	46.00	13.00	10.00	-
P78.1F5K2	78.10	46.00	72.00	89.40	128.00	35.00	39.60	12.00	9.70	-

*Attachments with 1 hole

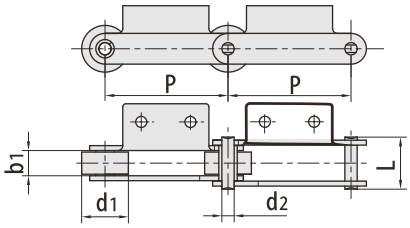

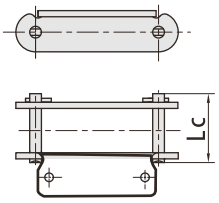

RBL chain number	Pitch	Roller diameter	Width between inner plates	Pin diameter	Pin length		Tensile strength	Average Tensile strength	Weight
	P mm	d1 max mm	b1 min mm	d2 max mm	L max mm	Lc max mm	Q min kN/LBF	Qo kN	q kg/m
P78.11F8	78.11	31.80	37.10	15.000	-	83.50	100.0/22480	110.00	12.05
P78.11F9	78.11	31.75	38.10	15.875	-	90.00	90.0/20232	99.00	11.28
P80F4	80.00	30.00	15.00	13.900	42.50	46.50	86.0/19333	95.00	3.97
P80F4-P	80.00	45.00	15.00	13.900	42.50	46.50	86.0/19333	94.60	5.67
P80F63A2	80.00	30.00	20.00	11.000	47.90	52.00	86.0/19333	94.60	5.30
P85A2F1	85.00	44.45	16.00	10.000	-	56.60	90.0/20232	100.00	6.80
P90F5A2	90.00	31.80	16.10	8.000	-	41.00	32.0/7193	35.00	2.86
P90F8A2-GK	90.00	45.00	37.00	12.700	69.10	74.00	140.0/31472	154.00	11.90
P95F1A2	95.00	30.00	23.00	10.000	45.50	49.50	60.0/13488	66.00	3.79
P97.5F1	97.50	50.00	24.00	15.000	-	52.00	100.0/22480	110.00	6.51
P100A2-F1	100.00	50.00	29.90	14.000	-	61.00	150.0/33721	165.00	9.20
P100F1	100.00	42.00	23.00	9.530	52.00	54.30	86.7/19704	95.00	6.06
P100F2	100.00	36.00	18.00	9.530	47.00	49.30	86.7/19704	95.00	4.60
P100F2A2	100.00	42.00	18.00	9.530	47.00	49.30	86.7/19490	95.37	5.33
P100F3	100.00	29.00	30.00	14.500	-	71.00	95.0/21356	105.00	9.46
P100F4	100.00	40.00	22.00	11.300	-	53.50	65.0/14612	72.00	5.13
P100F5	100.00	22.20	22.00	11.300	-	53.50	65.0/14612	72.00	3.90
P100F12	100.00	45.00	37.00	12.000	64.00	67.00	150.0/33721	165.00	10.30
P100F15	100.00	38.00	25.80	10.700	-	57.00	45.0/10116	50.00	5.25
P100F16A2-F	100.00	31.80	16.10	8.000	34.80	35.50	55.0/12364	60.50	2.68
P100F33	100.00	40.00	27.00	11.300	-	64.80	100.0/22480	110.00	6.80
P100F41A2	100.00	45.00	25.40	12.700	-	63.80	80.0/17984	88.00	8.26
P100F50	100.00	36.00	29.00	15.000	70.00	76.00	200.0/44992	220.00	13.93
P100F75	100.00	26.00	22.00	10.700	-	55.00	45.0/10116	50.00	4.75
P100F82A1	100.00	31.80	16.10	8.000	-	41.00	32.0/7193	35.20	3.07
P100F93	100.00	40.00	22.00	11.300	-	59.50	86.0/19333	94.60	8.07
P100F94K1	100.00	47.60	26.00	27.000	61.00	70.00	160.0/35993	176.00	12.90
P100F95A2	100.00	32.00	14.00	11.100	32.50	36.00	60.0/13488	66.00	3.11
P100F99K2	100.00	40.00	22.00	11.100	48.40	53.40	65.0/14612	71.50	5.54
P100F104	100.00	40.00	22.00	11.300	-	60.70	146.0/32822	160.60	7.33
P100F108K2	100.00	40.00	22.00	11.300	-	53.50	65.0/14612	71.50	5.80
P100F109A2	100.00	45.00	21.00	14.000	48.00	53.00	50.0/11240	55.00	6.94

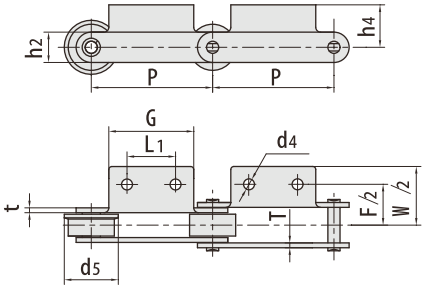

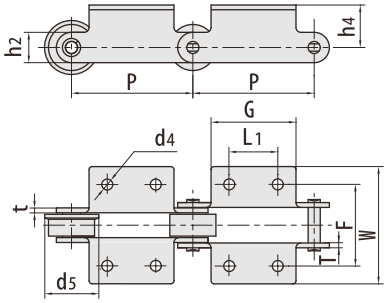

RBL chain number	P mm	L1 mm	G mm	F mm	W mm	h4 mm	h2 mm	d4 mm	t/t mm	d5 mm
P78.11F8	78.11	30.00	65.00	120.00	150.00	35.00	38.10	12.00	7.90	-
P78.11F9	78.11	38.10	116.60	104.60	133.30	31.75	38.10	14.30	7.90	-
P80F4	80.00	40.00	70.20	57.40	87.40	22.95	27.10	8.50	5.60/4.15	-
P80F4-P	80.00	40.00	70.20	57.40	87.40	22.95	27.10	8.50	5.60/4.15	-
P80F63A2	80.00	40.00	70.20	62.40	92.40	22.95	27.10	8.50	5.60/4.15	40.00
P85A2F1	85.00	30.00	50.40	95.00	125.00	22.50	35.00	9.00	4.80	-
P90F5A2	90.00	40.00	65.00	60.00	92.00	20.00	22.00	10.00	3.20	42.00
P90F8A2-GK	90.00	40.00	75.00	96.00	118.00	44.50	38.00	11.00	6.00	-
P95F1A2	95.00	40.00	65.00	66.40	96.40	22.50	25.00	8.50	4.00	40.00
P97.5F1	97.50	-	50.00	-	130.00	35.00	35.00	-	4.00	-
P100A2-F1	100.00	40.00	65.00	98.00	128.00	35.00	40.00	10.00	4.00	65.00
P100F1	100.00	78.00	96.00	73.00	103.00	17.50	32.00	7.00	5.00	-
P100F2	100.00	40.00	70.00	68.00	98.00	17.50	32.00	9.00	5.00	-
P100F2A2	100.00	40.00	70.00	68.00	98.00	17.50	32.00	9.00	5.00	-
P100F3	100.00	40.00	70.00	100.00	128.00	28.00	38.10	12.00	6.00	-
P100F4	100.00	40.00	65.00	70.00	94.00	22.00	32.00	10.00	4.50	-
P100F5	100.00	40.00	65.00	70.00	94.00	22.00	32.00	10.00	4.50	-
P100F12	100.00	60.00	90.00	98.00	128.00	34.00	40.00	11.50	5.00	64.00
P100F15	100.00	29.85	65.00	75.00	115.60	20.00	28.00	9.00	4.80	-
P100F16A2-F	100.00	40.00	65.00	60.00	92.00	20.00	22.00	10.00	3.20	42.00
P100F33	100.00	40.00	65.00	78.30	102.30	24.30	32.00	10.00	6.00	50.00
P100F41A2	100.00	40.00	70.00	80.00	126.00	25.00	31.80	12.00	6.30	60.00
P100F50	100.00	40.00	70.00	156.00	196.00	43.00	60.00	9.00	8.00	-
P100F75	100.00	29.85	65.00	68.00	112.00	20.00	28.00	12X9	4.80	-
P100F82A1	100.00	△	65.00	60.00	92.00	20.00	22.00	10.00	3.20	42.00
P100F93	100.00	40.00	70.00	100.00	124.00	30.00	32.00	100.00	6.00	-
P100F94K1	100.00	△	35.00	85.00	116.00	38.50	55.00	13.00	7.00/5.00	-
P100F95A2	100.00	30.00	51.00	76.00	104.00	18.00	30.00	9.00	3.00	-
P100F99K2	100.00	40.00	65.00	70.00	104.00	22.00	32.00	9.50	4.80	-
P100F104	100.00	40.00	65.00	70.00	104.00	23.60	32.00	10.00	6.30	-
P100F108K2	100.00	40.00	65.00	70.00	94.00	35.00	32.00	10.00	4.50	-
P100F109A2	100.00	40.00	60.00	110.00	130.00	17.50	35.00	6.40	5.00	-

*Attachments with 1 hole

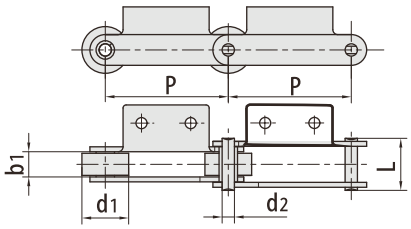

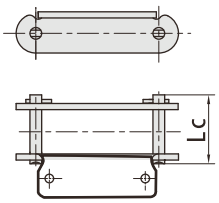

RBL chain number	Pitch	Roller diameter	Width between inner plates	Pin diameter	Pin length		Tensile strength	Average Tensile strength	Weight
	P mm	d1 max mm	b1 min mm	d2 max mm	L max mm	Lc max mm	Q min kN/LBF	Qo kN	q kg/m
*P100F128K2	100.00	32.00	45.00	16.000	-	95.00	240/53954	276.00	13.50
P100F143	100.00	40.00	24.00	11.300	-	53.50	65.0/14612	72.00	5.73
P100F148A2-F	100.00	38.00	20.50	9.530	43.60	47.90	38.0/8540	43.00	3.93
P100F101A2	100.00	22.20	24.00	11.100	57.50	62.70	70.0/I5736	77.00	5.50
P100F175A2	100.00	49.00	30.00	14.500	-	71.00	112.0/25178	123.20	-
P100F226K2	100.00	31.00	14.50	10.000	37.50	41.50	80.0/I7984	88.00	3.00
P100F233A2	100.00	30.00	32.00	14.000	-	72.50	190.0/42712	209.00	7.65
P100F237A3	100.00	40.00	33.00	10.000	56.00	61.00	85.0/19108	93.50	6.68
P100F241K2	100.00	25.00	31.00	12.000	-	65.00	80.0/I7984	88.00	7.52
P100F251K2	100.00	29.00	30.00	14.500	-	71.00	79.0/I7759	86.90	7.30
P100F264A2	100.00	40.00	27.00	11.300	-	64.50	65.0/14612	71.50	7.12
P100F277A2	100.00	45.00	21.00	21.000	-	60.00	120.0/26976	132.00	7.32
P100F281A1	100.00	40.00	24.00	12.000	47.80	54.80	75.0/16860	82.50	6.40
RF10100K2	100.00	50.80	30.00	14.500	-	69.00	102.7/23087	113.00	12.60
P100F148A2-F	100.00	44.50	20.50	9.530	43.60	47.90	38.0/8542	41.80	3.93
P100F331A2	100.00	28.58	20.50	10.000	42.30	46.10	56.0/I2589	61.60	4.10
P100F356A2-F	100.00	50.00	37.00	14.000	61.80	66.00	105.0/23604	115.50	10.20
*P101.6F1	101.60	25.00	55.00	16.000	-	110.00	60.0/I3488	66.00	11.90
P101.6F2A2F1	101.60	47.60	18.20	19.100	-	53.50	97.8/22000	107.58	7.16
P101.6F9	101.60	31.75	15.00	14.200	-	44.20	66.7/15159	73.00	8.40
*P101.6F17K2	101.60	25.40	55.60	15.880	-	115.00	180.0/40492	198.00	12.40
*P101.6F17K2F1	101.60	25.40	55.60	15.880	-	115.00	180.0/40464	198.00	11.92
P101.6F18A1	101.60	31.75	15.00	10.000	37.00	41.00	56.0/12589	61.00	3.63
*P101.6F18A2	101.60	31.75	15.00	10.000	37.00	41.00	40.0/6992	44.00	3.66
P101.6F21	101.60	38.10	53.80	15.875	-	112.20	180.0/40492	198.00	14.90
P101.6F25	101.60	36.50	50.80	19.050	-	112.00	200.0/44992	220.00	18.10
P101.6F30A2	101.60	38.00	22.00	10.000	-	52.80	100.0/22480	110.00	5.19
P101.6F35	101.60	66.70	25.00	25.400	61.00	66.00	160.0/35993	176.00	15.73
P101.6F36	101.60	57.15	33.40	15.880	-	92.00	180.0/40492	198.00	14.33
P101.6F39	101.60	57.15	33.30	16.000	82.00	89.00	127.0/28550	140.00	17.70
P101.6F39K1F1	101.60	57.15	33.30	16.000	82.00	89.00	127.0/28550	140.00	16.60
P101.6F40A2	101.60	38.10	21.00	10.000	-	52.00	50.0/11240	55.00	4.69
P101.6F41K1	101.60	44.50	27.00	11.300	-	67.00	78.0/I7546	86.00	10.20
P101.6F43A2	101.60	50.00	16.00	16.000	49.00	53.50	145.0/32620	160.00	7.95

*Bush chain: d1 in the table indicates the external diameter of the bush.

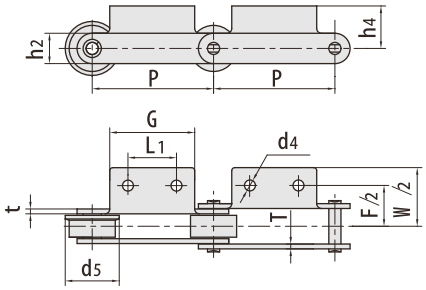

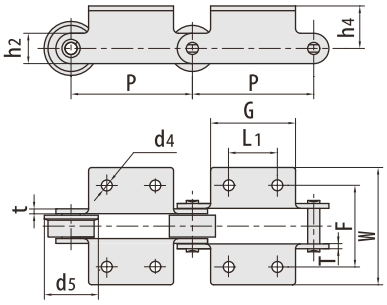

RBL chain number	P mm	L1 mm	G mm	F mm	W mm	h4 mm	h2 mm	d4 mm	t/t mm	d5 mm
P100F128K2	100.00	30.00	61.00	123.20	163.50	35.00	50.00	13.00	8.00	-
P100F143	100.00	40.00	65.00	70.00	100.00	35.00	32.00	11.00	4.00	50.00
P100F148A2-F	100.00	50.00	70.00	72.00	104.00	37.00	21.00	9.00	4.00	44.50
P100F101A2	100.00	41.00	65.00	86.00	134.00	24.50	33.00	9.00	6.00	
P100F175A2	100.00	40.00	70.00	100.00	128.00	28.00	38.10	M 8	6.00	
P100F226K2	100.00	35.00	70.00	65.00	98.00	35.00	25.00	9.00	4.50/4.00	
P100F233A2	100.00	40.00	70.00	80.00	112.00	31.00	40.00	10.50	6.00	
P100F237A3	100.00	56.00	100.00	108.00	144.00	31.00	32.00	12.00	4.00	
P100F241K2	100.00	50.00	90.00	100.00	132.00	35.00	42.00	12.00	5.00	
P100F251K2	100.00	40.00	70.00	100.00	128.00	28.00	38.10	12.00	6.00	
P100F264A2	100.00	40.00	65.00	75.00	99.00	22.00	32.00	10.00	6.00	
P100F277A2	100.00	40.00	80.00	70.00	110.00	31.50	35.00	13.00	6.00	
P100F281A1	100.00	△	76.00	77.00	140.00	26.00	36.00	16.60	4.00	
RF10100K2	100.00	40.00	70.00	100.00	126.00	28.00	38.10	12.00	6.30	
P100F148A2-F	100.00	50.00	70.00	72.00	104.00	37.00	21.00	9.00	4.00	
P100F331A2	100.00	50.00	70.00	71.50	91.50	35.00	25.00	9.00	4.00	
P100F356A2-F	100.00	40.00	65.00	105.00	135.00	35.00	40.00	M 8	4.00	64.00
P101.6F1	101.60	44.00	73.00	136.00	165.00	30.00	40.00	11.00	10.00	
P101.6F2A2F1	101.60	40.00	65.00	70.00	94.00	22.00	38.10	10.00	5.00	
P101.6F9	101.60	31.00	65.00	75.40	107.00	21.25	29.00	10.50	4.50	
P101.6F17K2	101.60	44.50	84.00	136.00	172.00	25.40	38.00	11.00	10.00	
P101.6F17K2F1	101.60	44.50	78.00	135.00	172.00	25.40	38.00	11.00	10.00	
P101.6F18A1	101.60	△	60.00	76.00	124.00	19.00	25.00	10.60	4.00	
P101.6F18A2	101.60	30.00	60.00	76.00	124.00	19.00	25.00	10.50	4.00	
P101.6F21	101.60	44.50	141.20	134.90	177.80	28.70	38.10	14.00	9.65	
P101.6F25	101.60	44.45	152.40	140.70	171.60	41.28	44.45	13.50	9.50	
P101.6F30A2	101.60	40.00	70.00	80.00	107.00	22.00	30.00	11.50	5.00	
P101.6F35	101.60	50.00	70.00	107.00	127.00	40.00	51.00	10.00	6.00	
P101.6F36	101.60	△	50.80	98.40	142.90	32.00	38.10	14.30	9.50	
P101.6F39	101.60	△	50.80	101.60	146.40	31.75	38.10	14.20	9.65	
P101.6F39K1F1	101.60	△	38.10	101.60	138.20	33.30	38.10	14.20	9.65	
P101.6F40A2	101.60	40.00	70.00	80.00	108.00	22.00	25.00	12.00	5.00	
P101.6F41K1	101.60	△	70.00	100.00	128.00	28.00	28.60	12.00	6.30	
P101.6F43A2	101.60	32.00	56.00	80.00	112.00	20.00	40.00	9.50	6.00	

*Attachments with 1 hole

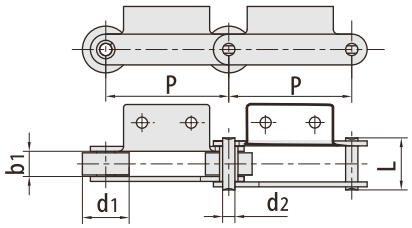

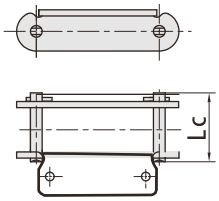

RBL chain number	Pitch	Roller diameter	Width between inner plates	Pin diameter	Pin length		Tensile strength	Average Tensile strength	Weight
	P mm	d1 max mm	b1 min mm	d2 max mm	L max mm	Lc max mm	Q min kN/LBF	Qo kN	q kg/m
P101.6F54K1	101.60	57.15	33.30	16.000	-	89.00	177.8/39998	197.40	17.86
P101.6F56K2	101.60	32.00	54.50	16.000	-	115.00	180.0/40493	199.80	16.51
P101.6F57K3	101.60	57.15	31.75	15.900	-	67.40	166.0/37343	191.20	13.90
P101.6F62K1	101.60	57.15	33.30	16.000	-	89.00	177.8/39998	197.40	18.83
P 101.6F69K3	101.60	38.10	23.80	12.700	-	65.10	100.0/22480	110.80	8.34
P10.16F76	101.60	57.15	31.56	16.000	56.20	62.00	82.6/18582	91.70	11.57
P101.6F80A2	101.60	44.50	31.60	15.900		81.00	130.0/29245	144.30	11.36
P101.6F84A2	101.60	50.80	30.23	11.180		62.00	80.36/18078	89.20	9.04
P101.6F88	101.60	57.15	31.00	15.880		89.00	140.0/31473	160.00	18.40
P101.6F91A1	101.60	38.10	21.00	9.700		52.50	50.0/11240	55.00	5.30
P101.6F95K2	101.60	28.60	27.60	12.700		67.00	120.0/26977	132.00	6.65
P101.6F97K1	101.60	44.45	33.27	15.880		82.60	113.2/25448	125.00	13.77
P101.6F98K2	101.60	47.60	19.00	12.000		53.00	100.0/22480	110.00	6.60
P101.6F101K1	101.60	57.15	33.30	16.000		89.00	114.0/25628	125.00	17.70
P101.6F115A2	101.60	31.75	15.00	14.200		44.20	66.7/14994	73.37	4.42
P101.6F117A2	101.60	50.00	16.00	16.000	49.00	53.50	145.0/32596	159.50	8.27
P101.6F121A1	101.60	38.10	22.60	10.000	49.80	53.60	50.0/11240	55.00	5.33
P101.6F123K1	101.60	28.58	30.00	14.270	-	70.10	158.0/35518	173.80	8.35
P101.6F128K3	101.60	57.00	32.00	15.900	66.80	73.50	120.0/26976	132.00	13.80
P101.6F131A2	101.60	50.00	33.00	16.000	66.00	70.50	145.0/32596	159.50	13.80
P101.6F135A2	101.60	26.50	25.22	11.100	55.50	60.00	127.0/28550	139.70	6.18
P101.6F136K2	101.60	31.75	50.80	19.050	-	112.00	200.0/44960	220.00	19.80
P101.6F147K1	101.60	50.80	34.90	15.880	-	92.00	200.0/44960	220.00	14.20
P101.6F165A2	101.60	57.15	33.27	15.900	-	87.50	230.0/51704	253.00	14.80
P114.3F7A2	114.30	63.50	31.60	15.900	-	80.40	200.0/44960	216.00	13.70
P117	117.00	35.00	50.00	17.000	-	102.00	150.0/33721	166.50	13.40
P120	120.00	50.00	28.00	12.000	54.00	58.00	160.0/35993	176.00	8.14
P120A2F4	120.00	32.00	37.00	12.700	69.10	-	140.0/31473	155.40	9.00
P120F14A2	120.00	57.48	37.00	12.700	69.10	74.00	140.0/31472	151.20	13.80
P120F15A1	120.00	50.00	28.00	12.000	54.00	58.00	160.0/35968	172.80	8.10
P120F17A2	120.00	47.00	47.40	24.000	-	109.00	500.0/112400	540.00	25.00
P125A2F1	125.00	44.00	44.00	20.000	-	97.20	150.0/33720	165.00	14.33
P125F2	125.00	32.00	18.50	8.000	39.00	-	50.0/11240	55.00	2.66
P125F9A2	125.00	45.00	25.00	14.600	55.50	60.00	50.0/11240	55.00	2.58

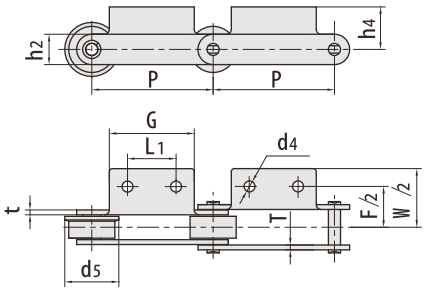

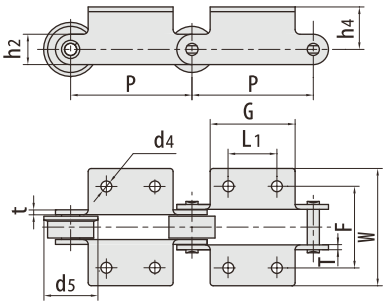

RBL chain number	P mm	L1 mm	G mm	F mm	W mm	h4 mm	h2 mm	d4 mm	t/t mm	d5 mm
P101.6F54K1	101.60	△	50.80	101.60	146.40	31.75	38.10	14.20	9.65	-
P101.6F56K2	101.60	45.00	81.00	142.20	179.20	32.50	45.00	11X15	10.00	-
P101.6F57K3	101.60	50.80	82.60	101.60	132.50	36.50	44.45	10.3/15	6.40	-
P101.6F62K 1	101.60	△	50.80	101.60	146.40	31.75	41.30	14.20	9.65	-
P101.6F69K3	101.60	38.10	68.00	69.90	103.20	22.20	33.00	10.30	6.40	-
P 101.6F76	101.60	60.00	76.20	70.00	101.20	35.00	38.10	5.00	4.00	70.00
P101.6F80A2	101.60	40.00	80.00	110.00	146.00	35.00	38.10	15.00	8.00	-
P101.6F84A2	101.60	50.80	79.50	101.60	133.60	28.70	31.80	9.60	4.80	-
P101.6F88	101.60	44.45	71.00	101.00	142.50	31.75	39.50	11.00	9.50	-
P101.6F91A1	101.60	△	70.00	80.00	108.00	22.00	25.00	M 10	5.00	-
P101.6F95K2	101.60	40.00	70.00	90.00	123.00	28.00	32.00	12.00	6.00	-
P101.6F97K 1	101.60	△	76.20	92.00	134.80	25.40	38.10	14.20	7.90	-
P101.6F98K2	101.60	40.00	70.00	78.00	105.00	32.00	30.00	11.50	5.00	-
P 101.6F101K1	101.60	△	50.80	101.60	146.40	31.75	38.10	9.70	9.65	-
P 101.6F115A2	101.60	32.00	66.00	75.40	107.00	21.25	28.50	9.35	4.50	-
P101.6F117A2	101.60	32.00	56.00	93.80	125.80	20.00	40.00	9.50	6.00	-
P 101.6F121A1	101.60	△	70.00	80.00	109.60	22.00	25.00	M 10	5.00	-
P101.6F123K1	101.60	△	70.00	100.00	132.60	28.00	38.10	10.00	6.40	-
P101.6F128K3	101.60	50.65	80.20	101.80	132.00	36.60	42.50	10.00	6.40	-
P 101.6F131A2	101.60	32.00	56.00	97.00	129.00	20.00	40.00	12.00	6.00	-
P 101.6F135A2	101.60	100.00	143.00	100.00	134.00	23.80	35.70	11.50	6.00	-
P 101.6F136K2	101.60	44.45	152.40	133.40	171.60	47.63	57.15	12.70	9.50	-
P 101.6F147K1	101.60	△	50.80	111.10	149.20	31.75	38.10	14.30	9.50	-
P 101.6F165A2	101.60	40.00	80.00	101.60	154.00	31.00	38.10	15.50	9.70	-
P114.3F7A2	114.30	40.00	76.00	110.00	146.00	35.00	38.10	15.00	8.00	-
P117	117.00	90.00	160.00	136.00	176.00	35.00	40.00	14.00	8.00	-
P120	120.00	50.00	75.00	82.00	119.60	20.00	40.00	7.00	5.00	59.00
P120A2F4	120.00	65.00	100.00	96.00	118.00	44.50	48.00	11.00	6.00	-
P120F14A2	120.00	65.00	100.00	96.00	118.00	44.50	48.00	11.00	6.00	-
P120F15A1	120.00	△	75.00	84.00	119.60	20.00	40.00	12.50	5.00	-
P120F17A2	120.00	65.00	100.00	126.40	156.40	58.00	72.00	11.00	10.00	-
P125A2F1	125.00	50.00	80.00	118.00	160.00	43.00	50.00	14.00	8.00	-
P125F2	125.00	46.00	76.00	64.00	90.00	14.00	22.00	10.00	3.00	42.00
P125F9A2	125.00	30.00	60.00	90.00	128.00	35.00	35.00	11.00	6.00/5.00	55.00

*Attachments with 1 hole

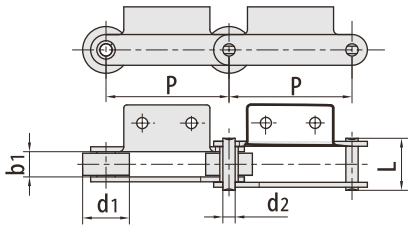

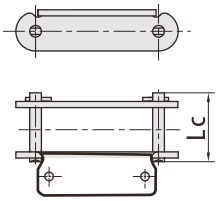

RBL chain number	Pitch	Roller diameter	Width between inner plates	Pin diameter	Pin length		Tensile strength	Average Tensile strength	Weight
	P mm	d1 max mm	b1 min mm	d2 max mm	L max mm	Lc max mm	Q min kN/LBF	Qo kN	q kg/m
P125F2K2-P	125.00	32.00	18.50	8.000	-	40.00	50.0/11240	55.00	2.83
P125F2A2-F	125.00	32.00	18.50	8.000	-	39.00	50.0/11240	55.00	2.34
P125F25K2-P	125.00	32.00	18.50	8.000	-	49.00	60.0/13488	66.00	4.00
P125F28A2	125.00	32.00	18.50	8.000	-	40.00	50.0/11240	55.00	3.13
P125F30A2-F	125.00	50.00	30.00	14.500	58.10	63.00	80.0/I7984	88.00	8.76
P125F38K2	125.00	47.50	25.50	26.000	60.00	66.00	180.0/40464	198.00	12.12
P125F54A2-F	125.00	50.00	30.00	14.500	58.10	63.00	120.0/26976	132.00	8.76
P125F70A2-P	125.00	70.00	37.50	18.000	-	80.00	230.0/51704	253.00	15.40
RF10125R-A2	125.00	50.80	30.00	14.500	-	69.00	226.0/50805	248.60	9.67
P125F82K2	125.00	32.00	29.50	14.270	-	71.50	160.0/35968	172.80	10.30
P125F88A2	125.00	42.00	14.00	10.000	35.50	39.50	56.0/I2589	61.60	4.40
P130K2F2	130.00	80.00	40.00	24.000	77.60	88.30	200.0/44992	218.00	13.90
P139.7F1A1	139.70	52.00	17.60	19.050	44.50	51.50	100.0/22480	108.00	6.02
P150F2	150.00	40.00	27.00	11.100	57.00	61.00	124.6/28318	137.00	5.40
P150F4	150.00	50.00	37.00	16.000	77.50	82.50	170.0/38243	187.00	10.90
P150F6	150.00	50.00	30.00	12.000	49.50	-	86.7/19704	95.00	7.27
P150F11A2	150.00	46.70	21.50	15.000	46.60	51.50	130.0/29245	142.00	7.13
P150F13A2	150.00	47.60	21.50	15.000	50.60	55.50	130.0/29245	142.00	8.52
P150F14A2	150.00	47.60	21.50	19.000	50.60	56.50	130.0/29245	142.00	8.59
P150F16A2	150.00	45.00	30.00	16.000	-	75.50	170.0/38243	187.00	8.56
P150F18	150.00	50.00	37.00	16.000	77.50	82.50	170.0/38243	187.00	14.49
RF10150RA2	150.00	50.80	30.00	14.500	69.00	-	113.0/25420	124.00	9.20
P150F21A2	150.00	57.48	35.91	19.050	-	79.00	150.0/33744	166.50	11.18
P150F26A2	150.00	44.50	30.00	14.500	-	69.00	113.0/25420	126.00	7.96
P150F31A2	150.00	60.00	35.00	16.000	-	67.20	170.0/38243	187.00	11.10
P150F32A2	150.00	44.50	27.00	11.300	-	67.00	78.0/I7547	86.50	6.78
P150F53A2	150.00	40.00	22.00	11.100	-	60.00	120.0/26976	132.00	6.18
P150F78A1	150.00	50.00	30.90	14.500	-	70.00	150.0/33721	165.00	8.81
P150F85	150.00	70.00	36.00	19.000	-	94.10	160.0/35969	184.00	15.20
RF10150RA2-F	150.00	50.80	30.00	14.500	-	69.00	113.0/25420	124.00	9.50
P150F105A2-F	150.00	50.80	30.00	14.500	-	69.00	113.0/25402	124.30	9.48
P150F105K2	150.00	50.80	30.00	14.500	-	69.00	113.0/25402	124.30	8.44
P150F110A2	150.00	50.80	30.00	14.500	62.50	67.60	113.0/25402	124.30	8.37
P150F112A2	150.00	50.00	28.00	14.500	-	67.00	135.0/30348	148.50	8.07

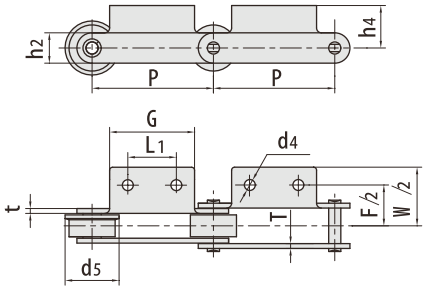

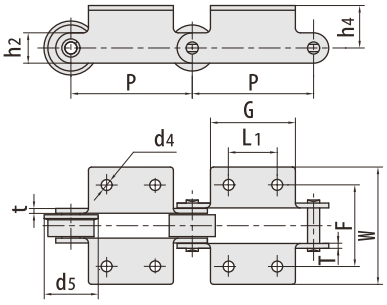

RBL chain number	P mm	L1 mm	G mm	F mm	W mm	h4 mm	h2 mm	d4 mm	t/t mm	d5 mm
P125F2K2-P	125.00	46.00	76.00	64.00	90.00	14.00	22.00	10.00	3.00	-
P125F2A2-F	125.00	46.00	76.00	64.00	90.00	14.00	22.00	10.00	3.00	42.00
P125F25K2-P	125.00	46.00	76.00	64.00	90.00	14.00	22.00	10.00	5.00	-
P125F28A2	125.00	46.00	76.00	64.00	90.00	45.00	22.00	8.00	3.00	42.00
P125F30A2-F	125.00	50.00	80.00	96.00	135.00	35.00	35.00	11.00	5.00	64.00
P125F38K2	125.00	90.00	184.00	105.00	170.00	31.50	54.00	16.00	7.00/5.00	-
P125F54A2-F	125.00	50.00	80.00	96.00	135.00	35.00	35.00	11.00	5.00	64.00
P125F70A2-P	125.00	56.00	90.00	120.00	160.00	38.00	50.00	14.80	7.00/8.00	-
RF10125R-A2	125.00	50.00	80.00	100.00	134.00	28.00	38.10	12.00	6.30	-
P125F82K2	125.00	50.00	80.00	100.00	132.00	29.00	38.10	12.00	6.50	-
P125F88A2	125.00	55.00	80.00	80.00	100.80	6.50	35.00	9.60	4.00	-
P130K2F2	130.00	55.00	95.00	102.00	144.00	47.50	60.00	11.00	6.00	-
P 139.7F1A1	139.70	△	40.00	80.40	109.40	31.00	40.00	15.00	5.00/4.00	-
P150F2	150.00	60.00	85.00	92.00	117.30	22.50	32.00	10.00	6.00	-
P150F4	150.00	60.00	85.00	120.00	150.00	33.00	43.00	14.00	8.00	-
P150F6	150.00	50.00	75.00	86.60	126.60	17.50	35.00	9X26	4.00	59.00
P150F11A2	150.00	36.00	60.00	163.50	189.60	40.15	39.70	10.60	5.00	-
P150F13A2	150.00	36.00	60.00	164.00	193.50	52.00	40.00	11.00	6.00	-
P150F14A2	150.00	36.00	60.00	164.00	193.50	52.00	40.00	11.00	6.00	-
P150F16A2	150.00	60.00	90.00	110.00	140.00	32.00	38.00	12.00	8.00	-
P150F18	150.00	60.00	85.00	120.00	150.00	33.00	43.00	M 10	8.00	-
RF10150RA2	150.00	60.00	90.00	100.00	130.00	28.00	38.10	12.00	6.30	-
P150F21A2	150.00	26.00	45.70	100.40	129.40	58.50	44.45	10.90	6.40	-
P150F26A2	150.00	60.00	84.50	100.00	130.00	23.60	33.60	12.00	6.30	60.00
P150F31A2	150.00	60.00	90.00	100.00	139.00	28.00	35.00	11.00	6.00	66.00
P150F32A2	150.00	60.00	90.00	100.00	128.00	28.00	28.60	12.00	6.30	55.00
P150F53A2	150.00	60.00	85.00	70.00	115.00	22.00	32.00	10.00	6.00	50.00
P150F78A1	150.00	△	90.00	100.00	136.60	28.95	38.10	11.50	6.30	65.00
P150F85	150.00	60.00	100.00	130.00	160.00	32.50	50.00	13.00	10.00	-
RF10150RA2-F	150.00	60.00	90.00	100.00	130.00	28.00	38.10	12.00	6.30	65.00
P150F105A2-F	150.00	60.00	90.00	100.00	130.00	28.00	38.10	12.00	6.30	12.00
P150F105K2	150.00	60.00	90.00	100.00	130.00	28.00	38.10	12.00	6.30	-
P150F110A2	150.00	60.00	90.00	100.00	130.00	28.00	38.10	12.00	6.30	-
P150F112A2	150.00	60.00	90.00	98.00	128.00	28.00	38.10	12.00	6.30	-

*Attachments with 1 hole

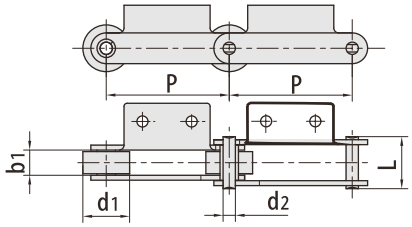

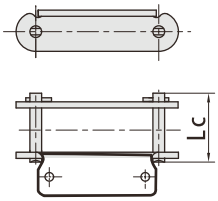

RBL chain number	Pitch	Roller diameter	Width between inner plates	Pin diameter	Pin length		Tensile strength	Average Tensile strength	Weight
	P mm	d1 max mm	b1 min mm	d2 max mm	L max mm	Lc max mm	Q min kN/LBF	Qo kN	q kg/m
P150F121A2	150.00	50.00	30.00	14.500	-	68.00	113.0/25402	124.30	7.78
P150F137A2	150.00	60.00	42.00	15.300	74.30	81.00	180.0/40464	198.00	13.44
P150F144A2	150.00	80.00	48.00	25.000	-	105.00	450.0/101160	495.00	32.00
P152F	152.40	40.10	37.50	19.100	97.50	-	328.7/74704	378.00	15.88
P152F4	152.40	50.80	30.60	14.270	62.80	67.50	88.0/20000	100.00	9.24
P152F11	152.40	38.00	53.50	14.700	112.40	-	130.0/29245	142.00	12.60
P152F16	152.40	70.00	76.20	25.400	152.00	-	160.0/35969	176.00	41.50
P152F19	152.40	50.80	30.60	14.270	62.80	67.50	112.0/25195	123.20	9.24
P152F20	152.40	47.60	39.70	19.050	99.70	-	300.0/67487	330.00	18.33
P152F32K2	152.40	36.00	45.00	20.000	103.00	-	300.0/67487	330.00	14.93
P152F33	152.40	36.00	68.00	20.000	128.00	-	300.0/67487	330.00	16.50
P152F41A2	152.40	36.00	36.00	15.500	-	90.00	235.2/52875	258.00	10.90
P152F42K2F1	152.40	63.50	34.90	19.000	93.00	-	152.0/34193	168.90	18.80
P152F43	152.40	76.20	35.00	23.810	108.00	-	446.8/100510	513.50	27.60
P152F50	152.40	101.60	44.00	22.200	87.00	-	250.0/56240	275.00	26.70
P152F54	152.40	30.00	53.00	16.000	112.00	-	175.0/39380	193.00	11.10
P152F56	152.40	50.80	33.34	15.880	86.00	-	113.0/25420	124.30	10.70
RF6205MF6A2	152.40	65.00	37.10	15.900	88.00	-	158.0/35543	186.00	16.80
P152F78K2F1	152.40	69.85	37.60	22.230	-	97.10	400.0/89923	440.00	26.70
P152F107A2	152.40	50.80	27.60	11.100	-	70.00	110.0/24728	121.00	9.10
P152F111K2	152.40	69.85	37.10	22.230	-	111.20	413.0/92846	474.00	25.10
P152F117K2	152.40	36.00	36.00	15.500	-	90.00	232.0/52155	255.00	12.30
*P 152F128K2	152.40	44.45	76.20	25.400	142.50	153.00	365.0/82055	401.00	36.03
P152F137A2	152.40	50.80	28.70	12.000	-	74.00	120.0/26977	132.00	8.52
RF6205MF7	152.40	65.00	37.10	15.900	-	88.00	158.0/35519	186.00	15.49
P152F144K2	152.40	40.00	37.30	19.050	-	95.00	244.6/55000	269.06	15.70
P152F168A2	152.40	38.10	36.50	15.900	-	87.50	252.7/56807	278.00	10.70
P152F176K2	152.40	36.00	36.00	15.500	-	90.00	237.0/53278	260.70	11.80
P152F180	152.40	40.10	37.50	19.100	-	97.50	370.0/83176	407.00	14.60
P152F206K2	152.40	70.00	40.00	19.000	-	98.00	220.0/49456	242.00	20.90
P152F208K2	152.40	34.90	37.10	15.900	-	88.00	220.0/49456	242.00	26.00
P152F213K2	152.40	36.00	36.00	15.500	78.00	85.00	235.2/52873	258.72	11.90
P152F227K2	152.40	75.00	37.00	19.000	-	98.00	220.0/49456	242.00	21.34
*P 152F247K2	152.40	44.50	76.20	25.400	-	149.00	560.0/125888	616.00	28.10

*Bush chain: d1 in the table indicates the external diameter of the bush.

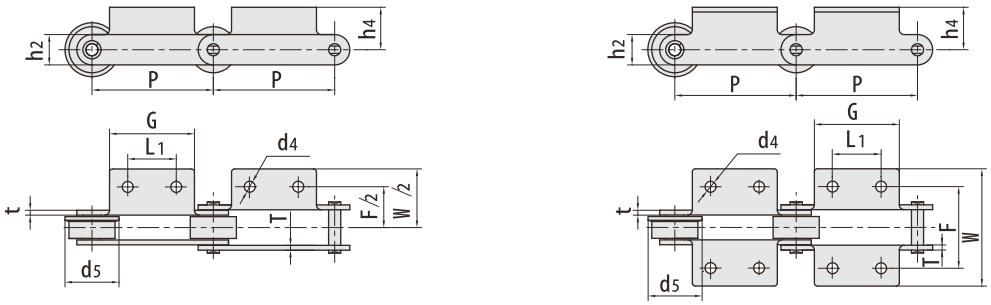

RBL chain number	P mm	L1 mm	G mm	F mm	W mm	h4 mm	h2 mm	d4 mm	t/T mm	d5 mm
P150F121A2	1S0.00	60.00	90.00	100.00	130.00	28.00	38.10	12.00	6.00	-
P150F137A2	150.00	50.00	78.50	109.00	136.00	49.00	45.00	12.30	6.00	74.00
P150F144A2	150.00	65.00	110.00	160.00	200.00	60.00	65.00	17.00	10.00	99.00
P152F	152.40	60.00	100.00	130.00	202.00	45.00	50.00	15.00	9.00	-
P152F4	152.40	60.00	100.00	110.00	140.00	32.00	38.00	15.00	6.00	65.00
P152F11	152.40	44.60	74.80	133.70	168.00	24.00	39.00	10.80	9.60/11.40	-
P152F16	152.40	63.50	178.50	184.15	241.15	47.65	63.50	20.70	12.70	-
P152F19	152.40	60.00	100.00	110.00	140.00	32.00	38.00	15.00	6.00	65.00
P152F20	152.40	△	76.20	120.65	172.30	41.30	50.80	17.50	9.50	-
P152F32K2	152.40	60.00	110.00	135.00	171.00	40.00	52.00	14.00	10.00	-
P152F33	152.40	60.00	110.00	158.00	194.00	40.00	52.00	14.00	10.00	-
P152F41A2	152.40	60.00	90.00	120.00	160.00	35.50	50.00	14.00	8.00	-
P152F42K2F1	152.40	66.80	140.00	108.20	148.20	41.40	50.80	12.70	9.50	-
P152F43	152.40	76.20	108.00	111.10	155.60	44.45	60.30	12.70	11.10	-
P152F50	152.40	63.50	102.00	101.60	135.00	37.50	65.00	13.50	6.00	-
P152F54	152.40	45.00	74.00	135.00	165.00	25.40	39.00	11.00	10.00	-
P152F56	152.40	50.80	76.20	101.60	133.40	28.60	38.10	11.10	8.00	-
RF6205MF6A2	152.40	60.00	100.00	120.00	158.00	38.00	45.00	15.00	8.00	85.00
P152F78K2F1	152.40	76.20	114.30	111.00	165.00	41.30	57.20	13.00	9.52	-
P152F107A2	152.40	50.80	88.90	101.60	132.80	31.75	38.10	M 12	6.35	-
P152F111K2	152.40	76.20	114.30	111.10	153.90	41.30	57.20	13.50	12.70	-
P152F117K2	152.40	60.00	100.00	120.00	160.00	38.00	50.00	14.00	8.00	-
P152F128K2	152.40	63.50	175.50	184.00	238.20	47.75	63.50	17.50	12.70	-
P152F137A2	152.40	50.80	76.20	102.40	137.00	32.00	32.00	10.50	7.00	-
RF6205MF7	152.40	60.00	100.00	120.00	158.00	34.50	45.00	14.80	8.00	85.00
P152F144K2	152.40	60.00	100.00	130.00	165.00	44.45	50.80	15.00	9.52	-
P152F168A2	152.40	60.00	100.00	120.00	162.00	38.00	45.00	15.00	8.00	-
P152F176K2	152.40	60.00	100.00	120.00	160.00	38.00	50.00	14.00	8.00	-
P152F180	152.40	60.00	100.00	130.00	202.00	45.00	50.00	15.00	9.00	-
P152F206K2	152.40	60.00	100.00	110.00	150.00	44.00	52.00	13.00	10.00	-
P1S2F208K2	152.40	60.00	100.00	120.00	158.00	38.00	44.50	15.00	7.90	-
P152F213K2	152.40	60.00	90.00	120.00	160.00	35.50	50.00	14.00	8.00	-
P152F227K2	152.40	60.00	100.00	110.00	140.00	44.00	52.00	13.00	10.00	-
P152F247K2	152.40	63.50	108.00	184.20	241.00	47.60	63.50	18.00	12.70	-

*Attachments with 1 hole

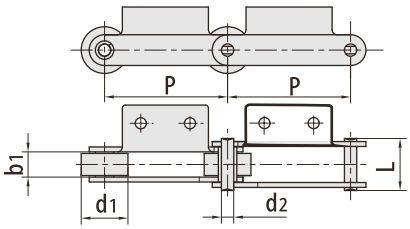

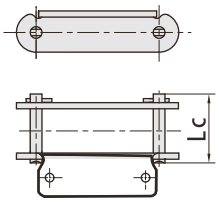

RBL chain number	Pitch	Roller diameter	Width between inner plates	Pin diameter	Pin length		Tensile strength	Average Tensile strength	Weight
	P mm	d1 max mm	b1 min mm	d2 max mm	L max mm	Lc max mm	Q min kN/LBF	Qo kN	q kg/m
P152F252A2	152.40	69.90	37.10	19.050	-	98.50	230.0/51704	253.00	18.70
P153F3K2	153.60	35.00	54.10	17.500	-	106.00	200.0/44961	220.00	14.02
*P 160F1	160.00	36.00	55.00	20.000	108.00	-	50.0/11364	55.00	14.50
P160F3	160.00	48.00	25.00	14.850	62.50	-	120.0/26977	132.00	7.10
P160F5	160.00	60.00	33.00	14.270	64.00	72.00	150.0/34091	165.00	8.00
P160F8	160.00	40.00	20.00	11.000	50.00	-	55.0/I2500	61.00	4.58
P160F18	160.00	50.00	34.00	20.000	-	88.00	100.0/22496	109.50	14.93
P180F25	160.00	70.00	25.00	14.250	55.50	60.50	100.0/22496	109.50	7.65
P160F26	160.00	50.00	29.90	13.940	-	60.00	105.0/23620	115.50	6.41
*P160F37A2	160.00	45.00	56.00	28.000	-	150.00	600.0/134885	660.00	31.24
P160F53K2	160.00	36.00	36.00	18.000	71.00	76.00	160.0/35790	176.00	-
*P160F64K2	160.00	38.00	55.00	20.000	-	108.00	50.0/11240	55.00	55.00
*P160F79A2	160.00	40.00	44.60	26.000	-	102.00	380.0/85432	418.00	55.00
P175F5A2	175.00	50.00	30.00	14.300	-	67.00	135.0/30348	148.50	7.20
P185	185.00	50.80	30.60	14.270	62.80	67.50	70.0/I5909	77.00	8.42
P200F6	200.00	50.00	37.00	16.000	77.50	82.50	170.0/38243	188.70	9.69
P200F7	200.00	40.00	27.00	11.100	57.00	61.00	124.6/28030	137.00	9.78
P200F8	200.00	65.00	37.00	16.000	86.50	-	170.0/38243	188.70	15.23
P200F13	200.00	80.00	51.00	20.000	106.00	-	180.0/40492	198.00	26.10
P200F15	200.00	40.10	51.40	19.100	109.50	-	213.0/47916	234.30	12.60
P200F23	200.00	65.00	36.50	16.000	-	86.50	170.0/38243	188.70	11.57
P200F22	200.00	90.00	48.00	16.000	-	99.00	170.0/38243	188.70	19.60
P200F26A2	200.00	50.00	37.00	16.000	85.50	90.50	170.0/39243	188.70	11.08
P200F28K2F1	200.00	65.00	37.10	16.000	77.50	85.50	160.0/35969	176.00	18.80
P200F30	200.00	65.00	38.00	18.000	-	79.50	120.0/26977	130.80	10.80
RF12200A2-F-200	200.00	65.00	37.10	15.900	-	86.50	279.0/62763	306.90	14.20
P200F82A2-F	200.00	65.00	51.00	16.000	-	100.00	170.0/38243	195.00	14.60
P200F118A2	200.00	50.00	29.60	14.300	-	67.80	135.0/30349	148.50	-
P200F121A2	200.00	65.00	37.10	15.900	-	86.50	200.0/44962	220.00	-
P200F122A2-F	200.00	70.00	37.00	22.000	-	106.00	480.0/107908	528.00	-
P200F123A2-F	200.00	65.00	37.10	15.900	-	86.50	250.0/56202	275.00	-
P200F124A2-F	200.00	70.00	37.10	15.900	-	86.50	160.0/35970	176.00	-
P200F126A2-F	200.00	70.00	37.10	18.000	-	86.50	279.0/62722	306.90	-
P200F133A2	200.00	80.00	51.40	19.050	-	109.50	2230./50132	245.00	-

*Bush chain: d1 in the table indicates the external diameter of the bush.

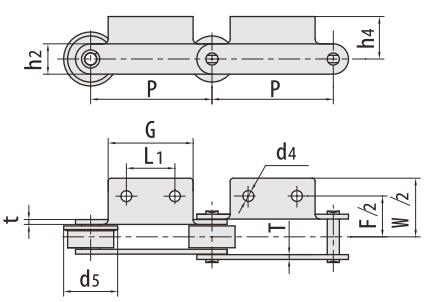

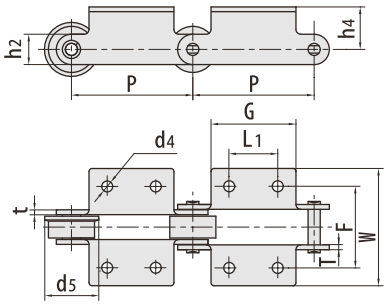

RBL chain number	P mm	L1 mm	G mm	F mm	W mm	h4 mm	h2 mm	d4 mm	t/t mm	d5 mm
P152F252A2	152.40	37.00	83.00	130.00	166.00	40.00	50.00	15.00	9.00	-
P153F3K2	153.60	44.50	204.80	136.60	168.60	38.10	44.50	12.70	8.00	-
P160F1	160.00	60.00	110.00	130.00	173.00	40.00	50.00	14.00	9.00	-
P160F3	160.00	49.00	70.00	83.00	117.00	32.50	35.00	8.50	6.00	-
P160F5	160.00	35.00	70.00	110.00	166.00	38.70	40.00	14.00	5.60	-
P160F8	160.00	80.50	133.00	56.00	100.00	16.00	32.00	833X1330	4.50	-
P160F18	160.00	60.00	110.00	110.00	153.00	40.00	50.00	15.00	9.00	-
P180F25	160.00	△	120.00	70.00	89.00	27.50	36.00	10.00	5.60	-
P160F26	160.00	30.00	50.00	94.00	124.00	35.00	40.00	10.00	4.00	65.00
P160F37A2	160.00	100.00	145.00	160.00	210.00	62.00	80.00	18.00	12.00	-
P16053K2	160.00	100.00	130.00	110.00	142.00	41.00	50.00	14.00	7.0/6.0	-
P160F64K2	160.00	60.00	110.00	130.00	173.00	40.00	55.00	14.00	9.00	-
P160F79A2	160.00	46.60	80.00	147.00	192.00	61.50	63.00	14.00	10.00	-
P175F5A2	175.00	80.00	120.00	100.00	130.00	28.00	38.10	12.00	6.00	-
P185	185.00	60.00	120.00	110.00	140.00	32.00	38.00	15.00	6.00	65.00
P200F6	200.00	81.50	120.00	120.00	150.00	33.00	43.00	14.00	8.00	-
P200F7	200.00	81.50	120.00	92.00	122.00	22.00	32.00	10.00	6.00	-
P200F8	200.00	80.00	120.00	200.00	238.00	38.00	43.00	15.00	8.00	80.00
P200F13	200.00	110.00	150.00	152.00	204.00	43.00	50.00	13.00	9.00	-
P200F15	200.00	80.00	120.00	150.00	200.00	43.00	50.80	15.00	9.50	-
P200F23	200.00	80.00	120.00	120.00	170.00	38.00	43.00	15.00	8.00	-
P200F22	200.00	80.00	120.00	212.00	250.00	38.00	43.00	15.00	8.00	100.00
P200F26A2	200.00	81.50	120.00	120.00	154.00	33.00	43.00	14.00	10.00	-
P200F28K2F1	200.00	80.00	120.00	120.00	158.00	75.00	44.50	12.00	8.00	-
P200F30	200.00	65.00	100.00	119.00	159.00	30.00	50.00	12.5/18.5	6.00	-
RF12200A2-F-200	200.00	80.00	120.00	120.00	158.00	38.00	44.50	15.00	7.90	80.00
P200F82A2-F	200.00	60.00	100.00	116.00	146.00	42.00	43.00	15.00	8.00	80.00
P200F118A2	200.00	80.00	120.00	100.00	130.00	28.00	38.10	12.00	6.00	-
P200F121A2	200.00	80.00	120.00	120.00	158.00	38.00	44.50	15.00	7.90	-
P200F122A2-F	200.00	80.00	120.00	128.00	176.00	43.75	55.00	13.00	12.70	85.00
P200F123A2-F	200.00	80.00	120.00	120.00	158.00	38.00	44.50	15.00	7.90	80.00
P200F124A2-F	200.00	80.00	120.00	120.00	158.00	38.00	44.50	13.00	7.90	85.00
P200F126A2-F	200.00	80.00	120.00	120.00	158.00	38.00	44.50	13.00	7.90	85.00
P200F133A2	200.00	80.00	120.00	150.00	200.00	45.00	50.80	15.00	9.50	100.00

*Attachments with 1 hole

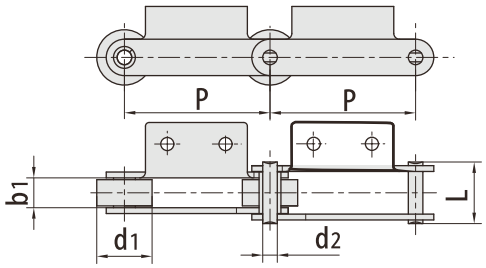

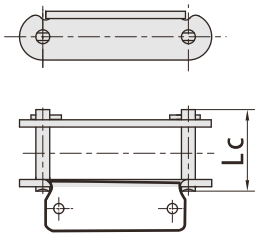

RBL chain number	Pitch	Roller diameter	Width between inner plates	Pin diameter	Pin length		Tensile strength	Average Tensile strength	Weight
	P mm	d1 max mm	b1 min mm	d2 max mm	L max mm	Lc max mm	Q min kN/LBF	Q 0 kN	q kg/m
P200F139A2F	200.00	65.00	39.00	16.000	-	95.00	200.0/44962	220.00	-
P200F142A2F	200.00	70.00	37.00	22.000	-	106.00	480.0/107908	528.00	-
P200F147A2F	200.00	70.00	37.10	18.000	-	86.50	279.0/62722	306.90	-
P203.2F6	203.20	88.90	45.97	25.400	-	116.30	489.0/110005	528.10	37.00
P203.2F10	203.20	88.90	45.97	25.400	-	116.30	488.0/109706	536.00	37.00
P203.2F16K2	203.20	101.40	46.10	25.400	-	122.00	680.0/152864	748.00	42.19
P220F4A3	220.00	50.00	30.00	14.500	-	58.00	135.0/30348	148.50	6.40
P228.6F28K2	228.60	101.60	57.15	22.230	-	118.30	231.0/51929	254.00	34.40
RF10250RA2	250.00	50.80	30.00	14.500	69.00	-	113.0/25420	124.30	6.47
P250F25	250.00	50.00	30.00	14.000	-	81.30	170.0/38243	188.70	8.40
*P250F38K2	250.00	50.80	65.00	38.000	-	143.50	700.0/157366	770.00	39.10
P250F68A2	250.00	50.00	30.60	14.000	-	70.60	112.0/25178	128.00	7.60
P250F106A2	250.00	80.00	51.40	19.100	-	109.50	351.9/79107	387.10	17.30
P250F129K2	250.00	45.00	52.00	20.000	-	112.00	250.0/56200	275.00	17.50
P250F142A2	250.00	50.00	30.00	14.300	-	67.00	135.0/30348	148.50	6.20
P250F157A3	250.00	55.00	32.00	16.000	-	79.00	160.0/35968	176.00	9.40
P250F170A2	250.00	50.00	30.00	14.300	-	67.00	135.0/30348	148.50	6.00
P250F176A2	250.00	65.00	40.00	18.000	-	89.00	250.0/56200	275.00	12.80
P250F191A2	250.00	80.00	60.00	34.000	-	164.00	1100.0/247280	1210.00	42.20
P250F193A2	250.00	65.00	35.00	16.000	-	83.00	268.0/60246	294.80	13.13
P250F200A2	250.00	65.00	37.10	15.900	-	83.50	186.0/41813	204.60	13.80
P300F41A2	300.00	50.00	30.00	14.300	-	67.00	135.0/30348	148.50	5.73

*Bush chain: d1 in the table indicates the external diameter of the bush.

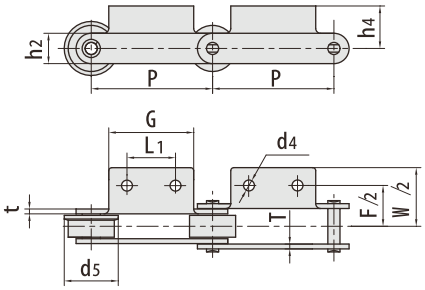

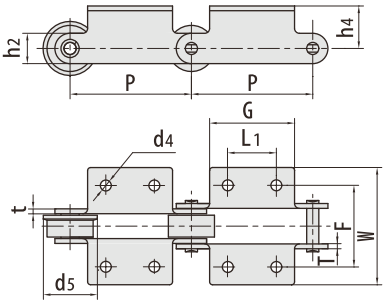

RBL chain number	P mm	L1 mm	G mm	F mm	W mm	h4 mm	h2 mm	d4 mm	t/T mm	d5 mm
P200F139A2F	200.00	80.00	120.00	118.00	163.00	35.00	45.00	15.00	7.50	80.00
P200F142A2F	200.00	80.00	120.00	164.00	176.00	43.75	55.00	13.00	12.70	85.00
P200F147A2F	200.00	80.00	120.00	120.00	158.00	38.00	44.50	13.00	7.90	85.00
P203.2F6	203.20	114.30	152.40	131.83	192.00	54.10	69.80	17.50	12.70	-
P203.2F10	203.20	82.55	152.40	131.83	192.00	54.10	69.80	17.50	12.70	-
P203.2F16K2	203.20	82.50	134.00	133.30	198.00	55.90	76.20	17.00	12.70	-
P220F4A3	220.00	60.00	90.00	100.00	136.00	28.00	38.00	12.00	6.00	-
P228.6F28K2	228.60	88.90	130.00	152.40	198.00	73.00	63.50	13.50	9.50	-
RF10250RA2	250.00	80.00	120.00	100.00	130.00	28.00	38.10	12.00	6.30	-
P250F25	250.00	60.00	93.00	108.00	143.60	30.00	38.00	10.00	8.00	-
P250F38K2	250.00	75.00	120.00	192.00	232.00	68.00	100.00	18.50	12.00	-
P250F68A2	250.00	125.00	160.00	100.00	132.00	28.00	38.00	12.00	6.00	65.00
P250F106A2	250.00	125.00	170.00	150.00	200.00	45.00	50.80	15.00	9.50	-
P250F129K2	250.00	125.00	170.00	140.00	180.00	60.00	75.00	14.00	8.00	-
P250F142A2	250.00	60.00	94.00	100.00	129.00	39.00	38.00	12.00	6.00	-
P250F157A3	250.00	100.00	140.00	100.00	140.00	38.00	45.00	M 12	8.00	-
P250F170A2	250.00	80.00	120.00	100.00	130.00	28.00	38.00	12.00	6.00	-
P250F176A2	250.00	80.00	120.00	120.00	150.00	37.00	55.00	12.00	8.00	-
P250F191A2	250.00	147.00	350.00	269.60	349.60	60.00	90.00	22.00	15.00	-
P250F193A2	250.00	125.00	160.00	118.00	162.00	37.50	45.00	15.00	8.00	80.00
P250F200A2	250.00	125.00	170.00	120.00	158.00	38.00	45.00	15.00	8.00	85.00
P300F41A2	300.00	60.00	94.00	100.00	129.00	39.00	38.10	12.00	6.00	-

*Attachments with 1 hole

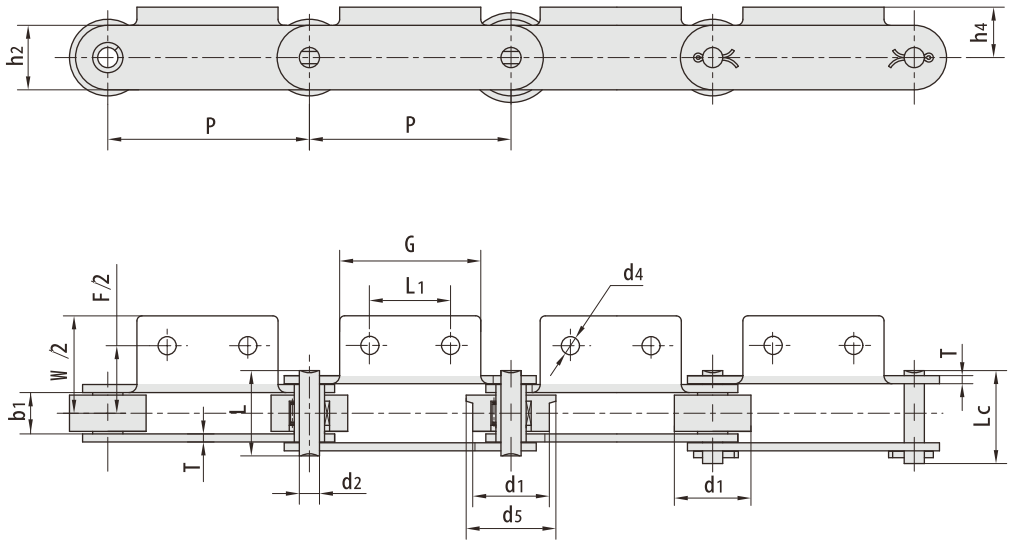

RBL chain number	Pitch	Roller diameter	Width between inner plates	Pin diameter	Pin length		Tensile strength	Average Tensile strength	Weight
	P mm	d1 max mm	b1 min mm	d2 max mm	L max mm	Lc max mm	Q min kN/LBF	Q 0 kN	q kg/m
M56F4P100	100.0	38.0	20.5	10.00	42.3	46.1	56.0/12727	62.0	4.30
M56F7P100	100.0	38.0	17.0	10.00	38.8	42.6	56.0/12727	62.0	4.84
M56F9P100	100.0	38.0	20.5	10.00	46.3	50.1	88.2/20045	97.0	5.60
M56F24A2F100	100.0	50.0	20.5	10.00	46.3	50.1	88.2/20045	97.0	8.16
M315F47A2FZ250	250.0	90.0	52.0	25.00	-	102.0	315.0/70812	346.5	22.40
M630A2F400	400.0	140.0	65.0	36.00	-	152.0	630.0/141720	693.0	58.50
P100	100.0	50.0	29.9	13.94	60.0	-	160.0/36364	176.0	9.27
P100F4A2F1	100.0	40.0	22.0	11.30	-	53.5	65.0/14612	71.5	5.52
P150F40	150.0	38.0	20.5	10.00	41.1	44.6	80.0/17984	88.0	3.70
P150F41	150.0	38.0	20.5	12.00	51.2	55.5	100.0/22480	110.0	5.50
P160	160.0	50.0	29.9	13.94	60.0	-	160.0/36364	176.0	7.23
P200F28	200.0	65.0	37.1	16.00	77.5	85.5	160.0/36364	176.0	14.10
P200F31	200.0	80.0	37.1	16.00	77.5	85.5	160.0/36364	176.0	18.10
P200F178A2	200.0	90.0	46.0	26.00	-	97.0	230.0/51704	253.0	22.00
P200F188A2	200.0	80.0	48.0	18.00	-	96.2	200.0/44960	220.0	22.00
P250F173A2	250.0	100.0	52.0	25.00	-	109.0	315.0/70812	345.0	32.70
P300	300.0	80.0	45.0	23.81	95.5	103.0	300.0/68181	320.0	24.32
P350	350.0	80.0	45.0	23.81	95.5	103.0	300.0/68181	320.0	23.60
P400F1	400.0	80.0	45.0	23.81	95.5	103.0	300.0/68181	320.0	22.67

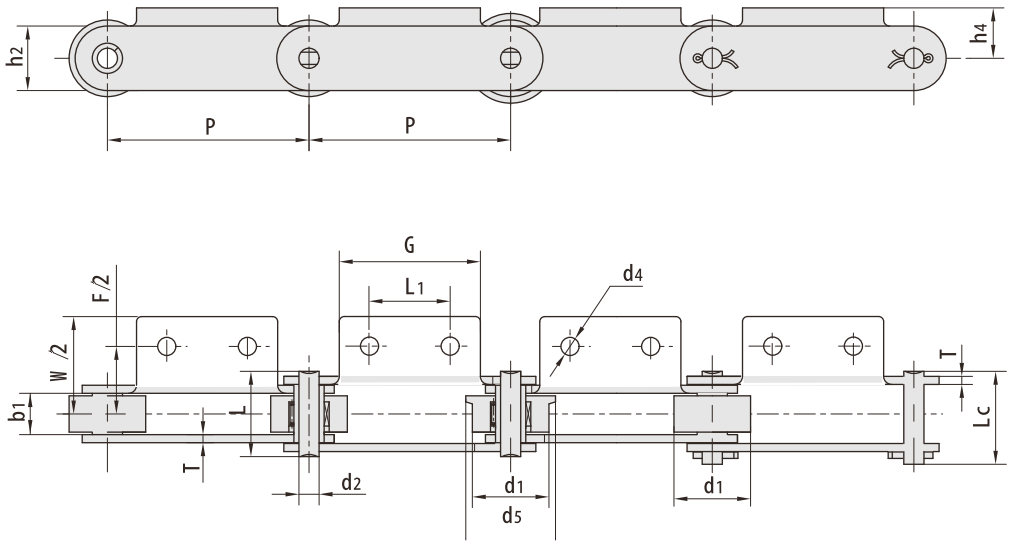

RBL chain number	L1 mm	G mm	F mm	W mm	h4 mm	h2 mm	d4 mm	T mm	d5 mm
M56F4P100	40.0	70.0	68.5	98.50	25.0	25.0	9.0	4.0	44.5
M56F7P100	40.0	70.0	71.5	92.00	55.0	25.0	6.5	4.0	45.0
M 56F9P100	40.0	70.0	67.5	96.58	25.0	32.0	9.0	5.0	44.5
M56F24A2F100	50.0	90.0	88.0	117.00	41.0	32.0	10.0	5.0	60.0
M315F47A2FZ250	100.0	210.0	160.0	194.00	70.0	70.0	19.0	8.0	110.0
M630A2F400	190.0	250.0	230.0	300.00	90.0	103.0	26.0	14.0	175.0
P100	40.0	65.0	98.0	128.00	35.0	40.0	10.0	4.0	65.0
P100F4A2F1	40.0	65.0	70.0	94.00	22.0	32.0	10.0	4.5	50.0
P150F40	60.0	90.0	71.0	94.00	27.0	32.0	10.0	3.7	-
P150F41	60.0	90.0	71.0	94.00	29.0	32.0	10.0	6.0	-
P160	85.0	115.0	94.0	124.00	35.0	40.0	10.0	4.0	65.0
P200F28	80.0	120.0	120.0	158.00	63.0	44.5	12.0	8.0	80.0
P200F31	80.0	140.0	120.0	158.00	85.0	44.5	M 10	8.0	100.0
P200F178A2	110.0	160.0	126.0	166.00	85.0	60.0	12.0	8.0	103.0
P200F188A2	95.0	160.0	138.0	184.00	85.0	51.0	11.0	8.0	99.0
P250F173A2	160.0	200.0	146.0	186.00	95.0	75.0	12.0	10.0	120.0
P300	200.0	250.0	150.0	190.00	105.0	60.0	13.0	10.0	100.0
P350	250.0	300.0	150.0	190.00	105.0	60.0	13.0	10.0	100.0
P400F1	300.0	350.0	150.0	190.00	105.0	60.0	15.0	10.0	100.0

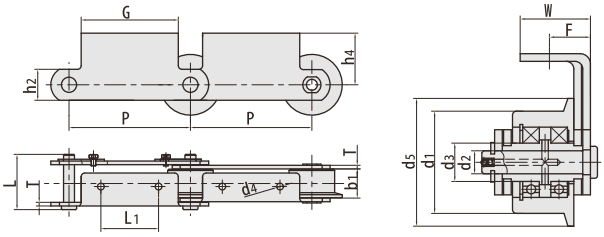

RBL chain number	Pitch	Roller diameter		Width between inner plates	Pin diameter	Pin length	Bush diameter	Plate depth	Plate thickness	Tensile strength
	P mm	d1 max mm	d5 max mm	b1 min mm	d2 max mm	L max mm	d3 max mm	h2 max mm	T max mm	Q min kN/LBF
M 160F6F200	200.0	80.0	98.0	47.5	18.0	91.0	30.0	51.0	6.0	160.0/35968
M 160F7F200	200.0	80.0	98.0	47.5	18.0	99.0	30.0	51.0	8.0	160.0/35968
M224F9F200	200.0	90.0	105.0	44.5	26.0	112.0	35.0	60.0	8.0	224.0/50355
P250F108A2	250.0	85.0	105.0	42.0	21.0	92.8	30.0	62.0	8.0	224.0/50355
P250F109A2	250.0	85.0	105.0	42.0	21.0	92.8	30.0	62.0	8.0	224.0/50355
P250F119A2	250.0	80.0	100.0	51.0	135.3	99.0	30.0	53.0	8.0	160.0/35968
P250F155A2FZ	250.0	85.0	105.0	42.0	21.0	93.8	30.0	62.0	8.0	224.0/50355
P250F121A2	250.0	85.0	104.0	42.0	21.0	91.0	30.0	62.0	8.0	224.0/50355

RBL chain number	P mm	L1 mm	G mm	F mm	W mm	h4 mm	d4 mm
M160F6F200	200.0	95.0	160.0	32.0	55.0	85.0	11.0
M160F7F200	200.0	95.0	160.0	36.0	59.0	85.0	11.0
M224F9F200	200.0	120.0	160.0	35.0	50.0	85.0	12.0
P250F108A2	250.0	144.0	200.0	48.5	64.5	120.0	12.5
P250F109A2	250.0	144.0	200.0	48.5	64.5	120.0	11.0
P250F119A2	250.0	140.0	200.0	46.0	68.0	90.0	M 10
P250F155A2FZ	250.0	160.0	200.0	45.5	64.5	120.0	12.0
P250F121A2	250.0	160.0	200.0	44.0	64.5	120.0	12.0

RBL chain number	P mm	L1 mm	W mm	t mm
P152F13	152.4	60.0	101.0	16.0

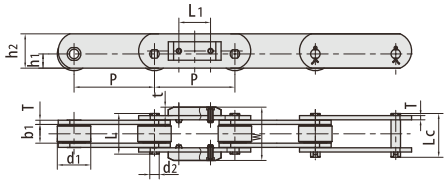

RBL chain number	Pitch	Roller diameter	Width between inner plates	Pin diameter	Pin length		Plate depth		Plate thickness	Tensile strength
	P mm	d1 max mm	b1 min mm	d2 max mm	L max mm	Lc max mm	h1 max mm	h2 max mm	T max mm	Q min kN/LBF
P152F13	152.4	63.4	35.0	18.0	77.0	83.0	26.9	65.0	8.0	160.0/35968

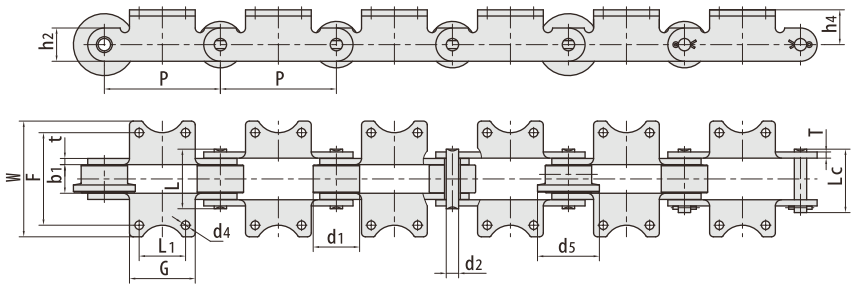

RBL chain number	Pitch	Roller diameter	Width between inner plates	Pin diameter	Pin length		inner Plate depth	Plate thickness	Tensile strength	Weight
	P mm	d1 max mm	b1 min mm	d2 max mm	L max mm	Lc max mm	h2 max mm	t/T max mm	Q min kN/LBF	q kg/m
P125F43A2	125.00	40.00	27.00	11.10	57.00	61.00	32.00	6.00	124.6028010	6.56
P150F4K2	150.00	50.00	37.00	16.00	77.50	82.50	43.00	8.00	170.00/38216	14.34
P150F108K2-F	150.00	60.00	37.00	16.00	77.50	82.50	43.00	8.00	170.00/38216	20.80

RBL chain number	P mm	L1 mm	G mm	F mm	W mm	h4 mm	h2 mm	d4 mm	t/T mm	d5 mm
P125F43A2	125.00	60.00	85.00	92.00	117.20	22.50	32.00	10.00	6.00	-
P150F4K2	150.00	60.00	85.00	120.00	150.00	33.00	14.00	14.00	8.00	-
P150F108K2-F	150.00	60.00	85.00	120.00	150.00	45.00	11.00	11.00	8.00	80.00

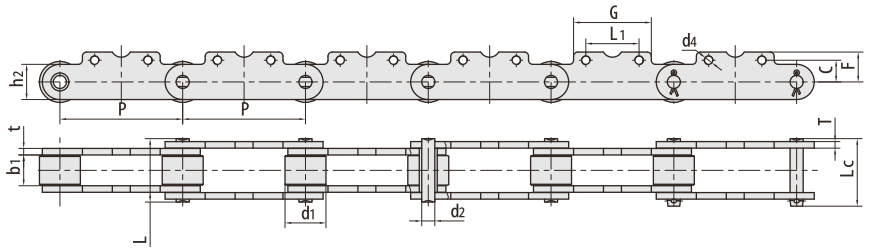

RBL chain number	Pitch	Roller diameter	Width between inner plates	Pin diameter	Pin length		inner Plate depth	Plate thickness	Tensile strength	Weight
	P mm	d1 max mm	b1 min mm	d2 max mm	L max mm	Lc max mm	h2 max mm	t/T max mm	Q min kN/LBF	q kg/m
P150F134SK2	150.00	50.00	37.00	16.00	77.50	82.50	43.00	8.00	170.00/38216	12.90

RBL chain number	P mm	L1 mm	G mm	C mm	F mm	d4 mm
P150F134SK2	150.00	65.00	95.00	36.50	43.00	M 10

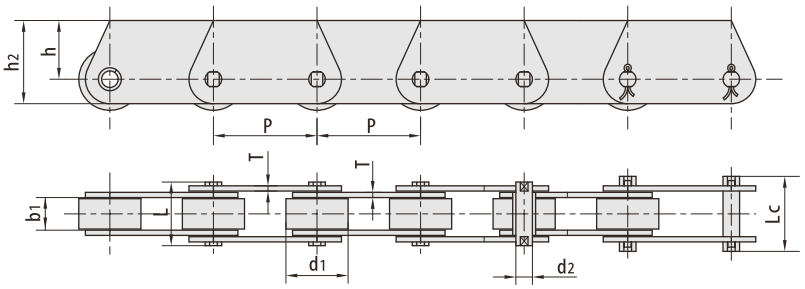

RBL chain number	Pitch	Roller diameter	Width between inner plates	Pin diameter	Pin length		Plate depth		Plate thickness	Tensile strength	Weight
	P mm	d1 max mm	b1 min mm	d2 max mm	L max mm	Lc max mm	h max mm	h2 max mm	t/T max mm	Q min kN/LBF	q kg/m
P31.75F1	31.75	19.05	9.80	5.08	19.2	22.5	18.00	25.5	1.60	20.0/4545	1.48
P63F10	63.00	42.00	23.00	11.11	50.0	53.0	29.40	44.4	4.80	80.0/17997	8.32
P100F59	100.00	40.00	25.00	14.50	61.0	67.5	23.00	40.0	6.30	100.0/22496	7.98
P100F285	100.00	30.00	16.00	7.92	-	44.3	20.00	31.8	4.80	56.0/12588	3.65
P101.6F10	101.60	50.00	30.00	14.27	64.0	68.5	30.00	50.0	6.40	180.0/40909	11.56
P101.6F178	101.60	57.15	33.00	16.00	81.5	88.0	31.75	50.8	9.70	125.0/28100	16.30
P125F69	125.00	65.00	51.40	19.00	101.0	108.0	38.10	63.5	9.50	224.0/50355	23.20
P125F71	125.00	65.00	51.40	18.90	101.0	108.0	38.10	63.5	9.50	224.0/50355	23.20
P152F49	152.40	63.50	34.00	15.60	-	82.0	38.10	65.0	8.00	160.0/35993	16.30
P150F86	150.00	50.00	21.00	15.00/20.00	60.0	65.0	30.00	50.0	8.00	112.0/25178	8.92
P160F2	160.00	60.00	38.00	20.00	-	80.0	36.00	60.0	6.00	190.0/43181	12.57
P160F44	160.00	60.00	38.00	20.00	72.0	78.0	35.00	60.0	6.00	190.0/42700	12.30
P300F23	300.00	65.00	37.10	15.90	-	90.0	40.00	63.5	9.50	213.0/47884	13.60
ME40F2P50.8	50.80	31.80	15.00	14.00	36.0	39.7	41.00	26.0	4.00	53.9/12123	5.20
ME40F2P76.2	76.20	31.80	15.00	14.00	36.0	39.7	41.00	26.0	4.00	53.9/12123	4.32
ME40F2P101.6	101.60	31.80	15.00	14.00	36.0	39.7	41.00	26.0	4.00	53.9/12123	3.88
ME40F3P503	50.80	31.80	15.00	14.00	36.0	39.7	38.00	25.3	4.00	53.9/12123	4.89
ME40F3P76.2	76.20	31.80	15.00	14.00	36.0	39.7	38.00	25.3	4.00	53.9/12123	4.05
ME40F3P101.6	101.60	31.80	15.00	14.00	36.0	39.7	38.00	25.3	4.00	53.9/12123	3.63
ME160F2P101.6	101.60	66.67	25.40	27.00	62.8	-	74.60	49.6	8.00	133.0/29915	18.34
ME160F2P1524	152.40	66.67	25.40	27.00	62.8	69.7	74.60	49.6	8.00	133.0/29915	15.00
MT18F1S50	50.00	18.00	11.50	5.72	25.5	28.2	10.00	17.5	2.50	18.0/4050	1.36
MT18F3P50	50.00	25.00	11.50	5.72	24.0	26.4	16.50	25.0	2.03	18.0/4050	2.00
MT18F10-S-50	50.00	18.00	25.00	5.72	39.0	41.7	17.50	10.0	2.50	18.0/4050	1.90
MT40FP50	50.00	31.00	15.00	10.00	36.0	39.0	17.50	30.0	4.00	40.0/8992	4.33
MT28F1-P-63	63.00	30.00	18.00	7.00	34.0	37.5	20.00	30.0	4.00	28.0/6300	3.40
MT40F1-P-63	63.00	30.00	16.00	8.50	37.0	40	19.00	30.00	4.00	40.0/8992	3.90
MT80F2P63	63.00	30.00	25.00	7.00	45.2	48.7	20.00	30.0	4.00	35.0/7875	4.58
MT40F3-P-80	80.00	36.00	20.00	8.50	42.5	46.5	22.50	35.00	4.00	40.0/8992	4.81
MT40FP100	100.00	31.00	15.00	10.00	36.0	39.0	17.50	30.0	4.00	40.0/8992	3.14
MT40F5-P-63	63.00	36.00	20.00	10.00	42.5	46.5	35.00	22.5	4.00	40.0/8992	5.46
MT56F10-P-63	63.00	42.00	23.00	11.11	50.0		44.40	29.4	4.80	56.0/12600	8.20
MT80F4P100	100.00	50.00	28.00	14.35	55.0	59.5	32.50	57.5	5.00	120.0/26977	9.38
MT56F1-B-100	100.00	15.00	24.00	10.00	46.0	49.5	35.00	50.0	4.00	56.0/12600	3.38
MT80F2P100	100.00	50.00	28.00	14.35	55.0	59.5	32.50	51.5	5.00	120.0/269776	9.56
MT315F3P250	250.00	85.00	57.20	24.00	119.7	119.7	53.00	84.8	9.50	315.0/70815	19.85

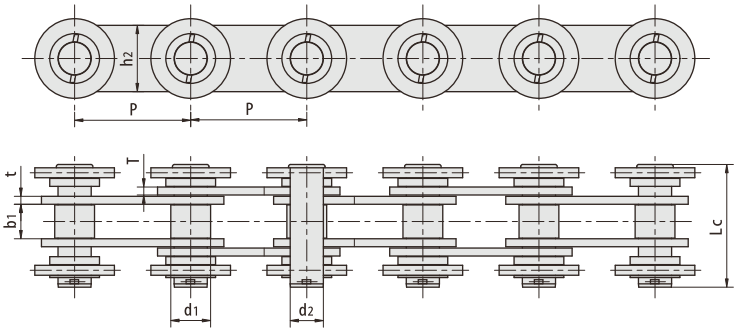

RBL chain number	Pitch P mm	Roller diameter d1 max mm	Width between inner plates b1 min mm	Pin diameter d2 max mm	Pin length Lc max mm	plate depth h2 max mm	Plate thickness t/T max mm	Tensile strength Q min kN/LBF	Average Tensile strength Qo kN	Weight q kg/m
P175F1	175.0	60.0	52.0	50.0	176.0	100.0	12.0	366.0/82280	400.0	25.5

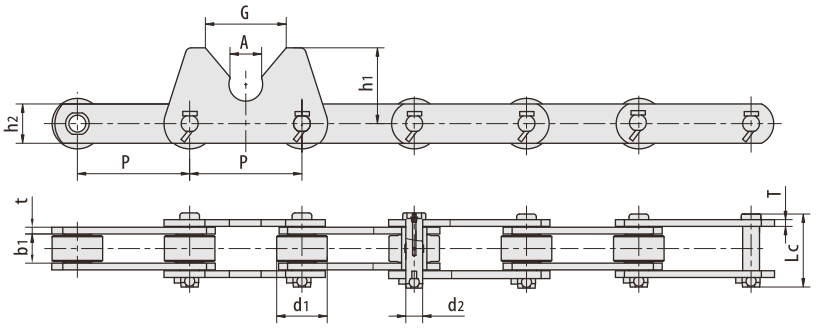

RBL chain number	Pitch P mm	Roller diameter b1 max mm	Width between inner plates b1 min mm	Pin diameter d2 max mm	Pin length Lc max mm	plate depth h2 max mm	Plate thickness t/T max mm	Tensile strength Q min kN/LBF	Average Tensile strength Q o kN	Weight q kg/m
P200F60	200.0	90.0	52.0	30.0	132.0	70.0	12.0	530.0/119148	609.0	36.9

RBL chain number	G mm	A mm	h1 mm
P200F60	144.0	56.6	135.0

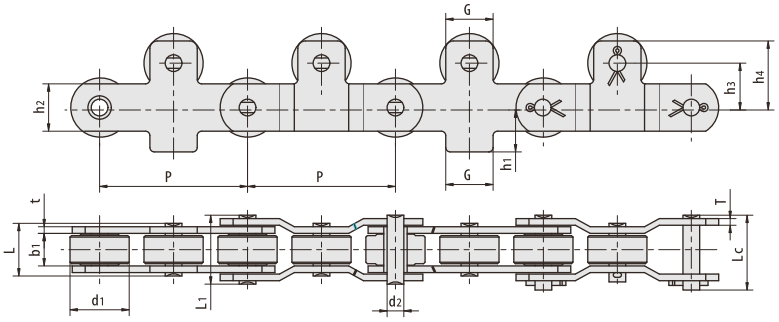

RBL chain number	Pitch	Roller diameter	Width between inner plates	Pin diameter	Pin length			plate depth	Plate thickness	Tensile strength	Average Tensile strength	Weight
	P mm	b1 max mm	b1 min mm	d2 max mm	L max mm	L1 max mm	Lc max mm	h2 max mm	t/T max mm	Q min kN/LBF	Q o kN	q kg/m
P100F126	100.0	40.0	22.0	11.3	36.5	47.0	51.0	32.0	4.5	70.0/15736	80.0	7.7

RBL chain number	G mm	h1 mm	h3 mm	h4 mm
P100F126	32.0	30.0	30.0	45.0

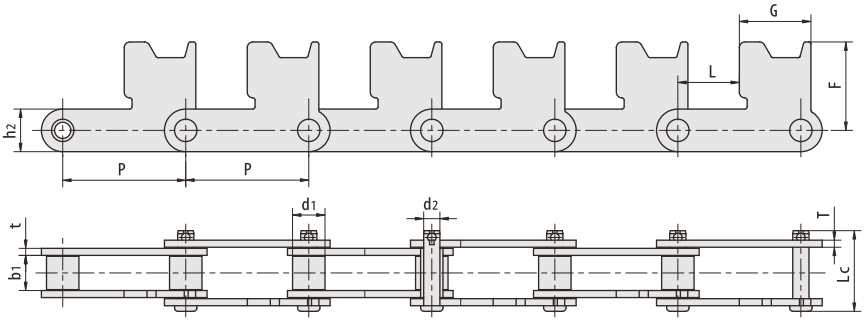

RBL chain number	Pitch	Roller diameter	Width between inner plates	Pin diameter	Pin length	plate depth	Plate thickness	Attachment dimension			Tensile strength	Average Tensile strength	Weight
	P mm	b1 max mm	b1 min mm	d2 max mm	Lc max mm	h2 max mm	t/T max mm	F mm	G mm	L mm	Q min kN/LBF	Q o kN	q kg/m
P110F5	110.0	29.0	30.4	14.5	72.1	38.1	6.3	79.05	64.0	55.0	229.0/51484	250.0	8.3
P110F21	110.0	54.0	48.0	27.0	118.0	70.0	12.0	95.00	64.0	55.0	600.0/134880	660.0	32.6

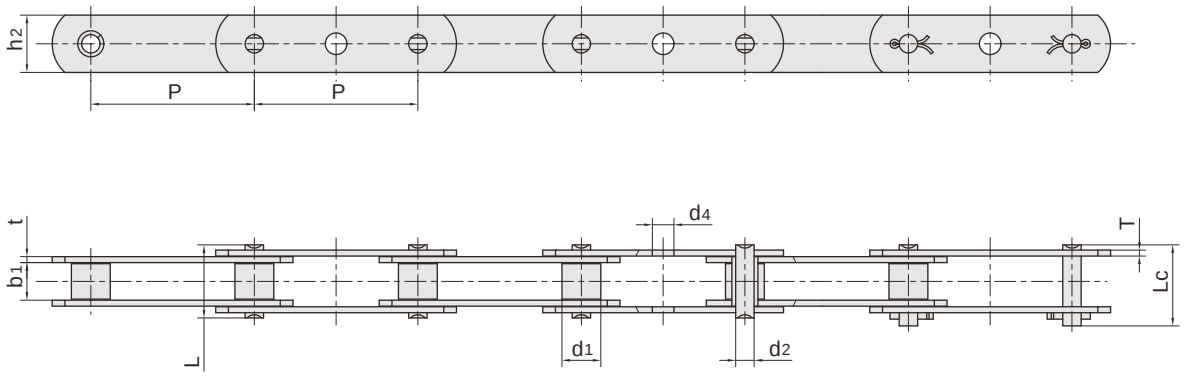

RBL chain number	Pitch	Roller diameter	Width between inner plates	Pin diameter	Pin length		Plate thickness			Tensile strength	Average Tensile strength	Weight
	P mm	b1 max mm	b1 min mm	d2 max mm	L max mm	Lc max mm	h2 max mm	t/T max mm	d4 mm	Q min kN/LBF	Q o kN	q kg/m
*P30GKF1	30.00	12.00	16.00	8.00	32.80	35.50	20.00	3.00	8.00	40.0/8992	44.00	2.10
P31.75GK	31.75	10.16	10.00	5.08	22.10	24.40	15.00	2.30	7.30	21.8/4901	23.98	0.92
P44.45F10	44.45	11.91	12.70	5.94	29.20	31.50	18.00	3.00	8.10	40.0/8992	44.00	1.33
P45F5	45.00	11.91	12.57	5.94	29.20	31.60	18.00	3.25	8.00	31.8/7149	34.98	1.37
P50F22GK	50.00	12.10	11.90	5.85	26.90	28.50	17.20	2.50	8.00	25.0/5620	27.50	1.10
P50.8F67GK	50.80	12.70	11.68	5.72	22.50	25.20	18.00	1.85	6.70	29.0/6519	31.90	0.94
P60F4GKF1	60.00	16.87	19.81	7.19	35.00	38.00	19.30	2.80	8.3×8.3	39.1/8790	43.01	1.60
P60F4GKF2	60.00	16.87	19.81	7.19	38.00	19.30	2.80	12.00	12.00	39.1/8790	43.01	1.57

*Bush chain: d1 in the table indicates the external diameter of the bush.

For assembly position of d4 hole see product drewing

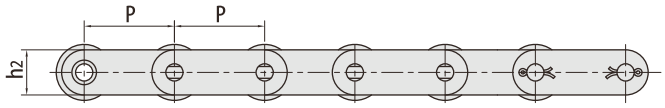

With D1 extended pin

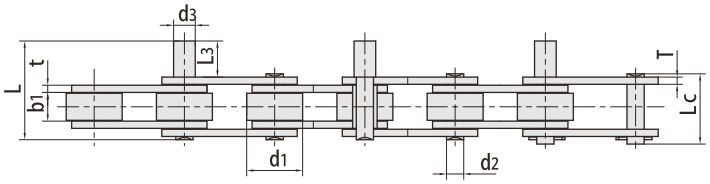

With D3 extended pin

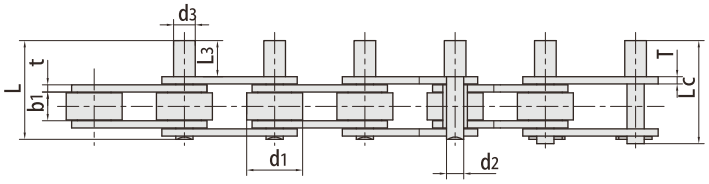

RBL chain number	Pitch	Roller diameter	Width between inner plates	Pin dimension					Plate dimension		Tensile strength	Average Tensile strength	Weight
	P mm	d1 max mm	b1 min mm	d2 max mm	d3 max mm	L3 mm	L max mm	Lc max mm	h2 max mm	t/T max mm	q kN/LBF	Qo kN	q kg/m
P20F6-D3	20.00	8.51	7.75	4.45	6.00	8.00	23.80	-	11.80	1.60	18.0/4046	19.80	0.68
P30-D3F1	30.00	15.88	17.02	8.28	21.70	21.70	55.40	58.60	20.00	3.50/3.00	60.0/13488	66.00	2.66
P31.75F9-D1	31.75	11.91	12.57	5.94	12.70	40.00	67.90	70.50	18.00	3.25	31.8/7149	34.98	2.22
P38.1F24-D1	38.10	25.00	12.00	7.92	12.00	40.00	71.70	15.30	20.00	4.00	55.0/12364	60.50	3.46
P41.3F18D1F1	41.30	25.00	10.00	9.00	12.00	25.00	50.00	52.80	22.00	3.00	45.0/10116	49.50	2.56
P47D1F1	47.00	31.00	16.00	7.92	12.00	27.50	59.00	62.80	24.00	3.10	56.7/12746	62.37	3.92
P50F3D3F1	50.00	31.00	15.00	9.53	12.00	20.00	53.70	57.20	25.00	4.00	83.0/18659	91.30	4.45
P50F3D3F2	50.00	31.00	15.00	9.53	12.00	45.00	78.80	82.20	25.00	4.00	83.0/18659	91.30	4.89
P503F24D3	50.80	25.40	11.68	5.72	12.00	27.55	49.30	52.00	17.80	1.85	29.0/6519	31.90	1.84
P50.8F34D 1	50.80	30.50	14.50	10.00	14.80	27.00	61.20	64.10	25.00	4.00	60.0/13488	66.00	4.18
P54.75D1	54.75	28.00	15.25	11.25	11.25	38.10	76.40	80.40	25.50	430	65.0/14612	71.50	3.89
*P60F11-D3	60.00	12.00	11.50	5.30	10.00	45.00	66.90	69.70	20.00	2.03	25.0/5620	27.50	1.40
P63F20-D3	63.00	11.91	12.57	5.94	5.94	40.00	66.70	69.50	20.00	3.00	31.1/6991	34.20	1.35
P635F31-D3	63.50	39.68	21.00	12.00	M 10	24.00	75.30	-	32.00	6.00	80.0/17984	88.00	7.57

*Bush chain: d1 in the table indicates the external diameter of the bush.

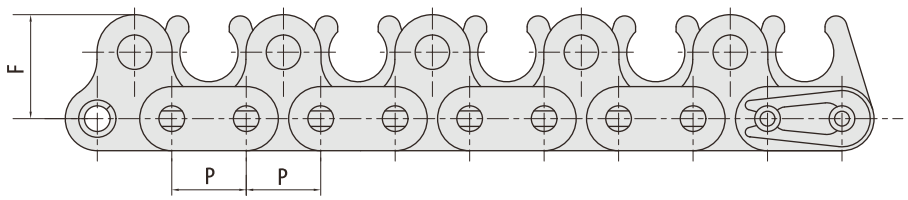

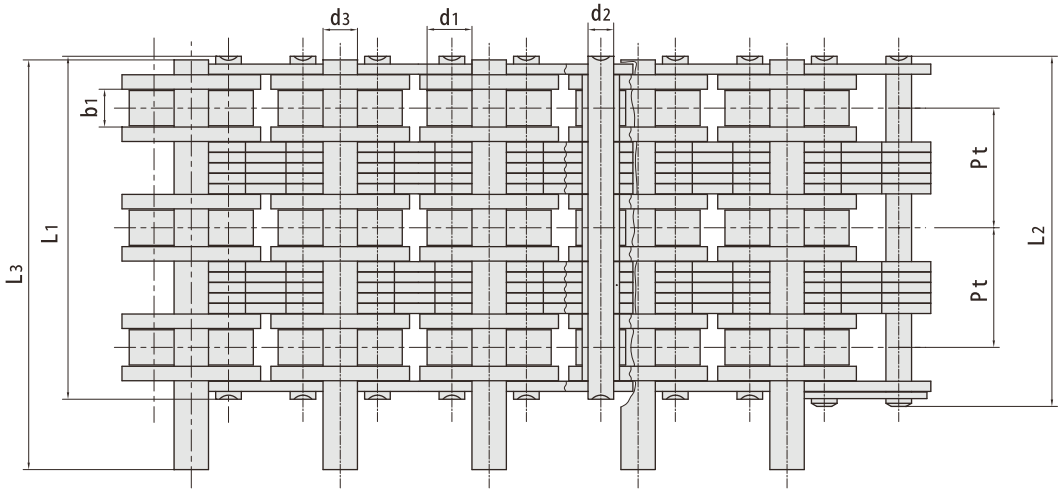

RBL chain number	Pitch	Roller diameter	Width between inner plates	Pin diameter		Pin length			Attachment dimension	Transverse pitch	Tensile strength	Weight
	P mm	b1 max mm	b1 min mm	d2 max mm	d3 max mm	L1 max mm	L2 max mm	L3 max mm	F mm	P t mm	Q min kN/LBF	q kg/m
06BF20	9.525	6.35	4.6	3.28	4.45	43.75	44.85	52.4	13.0	15.0	24.9/5682	2.77

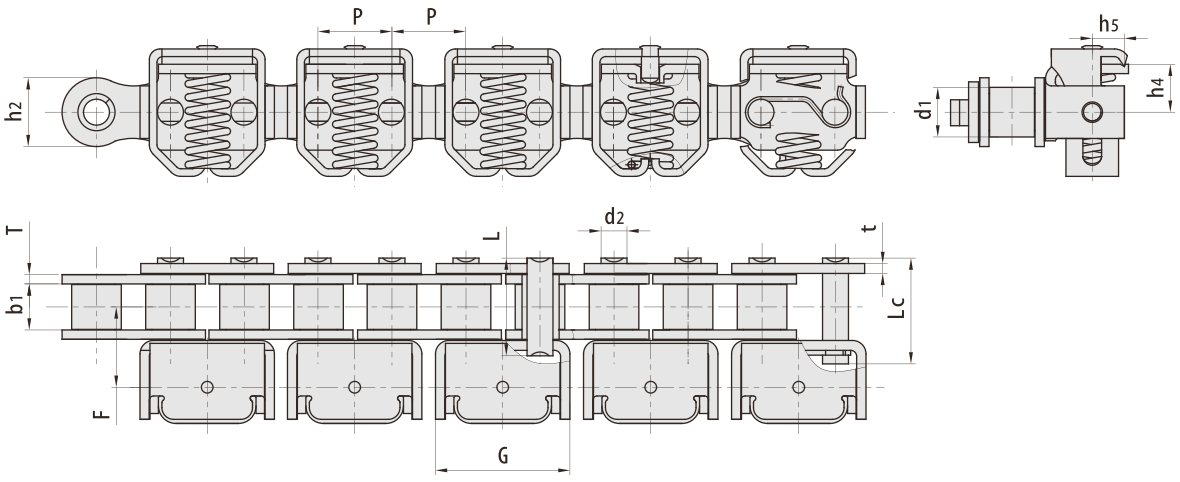

RBL chain number	Pitch	Roller diameter	Width between inner plates	Pin diameter	Pin length		plate depth	Plate thickness	Attachment dimension				Tensile strength	Average Tensile strength	Weight
	P mm	b1 max mm	b1 min mm	d2 max mm	L1 max mm	Lc max mm	h2 max mm	T/t mm	h4 mm	h5 mm	F mm	G mm	Q min kN/LBF	Qo kN	q kg/m
08B-GC	12.7	8.51	7.75	4.45	16.7	18.2	11.8	1.60	8.5	5.5	13.7	19.8	18.00/4046	19.80	1.20

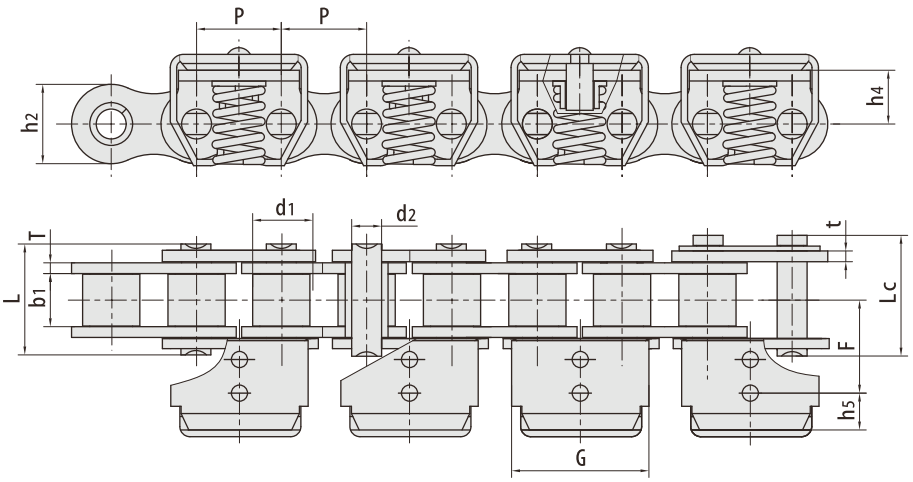

RBL chain number	Pitch	Roller diameter	Width between inner plates	Pin diameter	Pin length		plate depth	Plate thickness	Attachment dimension				Tensile strength	Weight
	P mm	b1 max mm	b1 min mm	d2 max mm	L1 max mm	Lc max mm	h2 max mm	T/t mm	h4 mm	h5 mm	F mm	G mm	Q min kN/LBF	q kg/m
08BSSF32	12.7	8.51	7.75	4.45	16.7	18.2	11.8	13.8	8.0	6.5	13.8	20.4	12.0/2727	1.14

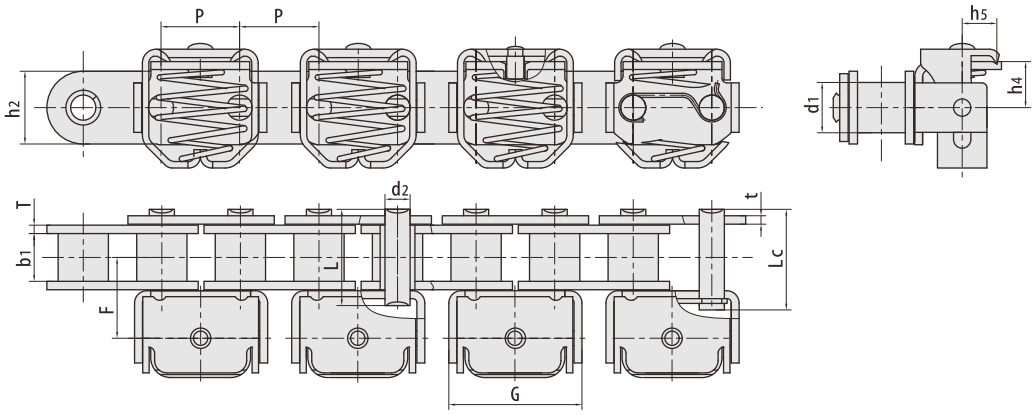

RBL chain number	Pitch	Roller diameter	Width between inner plates	Pin diameter	Pin length		plate depth	Plate thickness	Attachment dimension				Tensile strength	Average Tensile strength	Weight
	P mm	b1 max mm	b1 min mm	d2 max mm	L1 max mm	Lc max mm	h2 max mm	T/t mm	h4 mm	h5 mm	F mm	G mm	Q min kN/LBF	Qo kN	q kg/m
10B-GC	15.875	10.16	9.65	5.08	19.3	20.7	14.7	1.70	9.0	7.0	16.4	16.9	22.40/5036	24.64	1.60

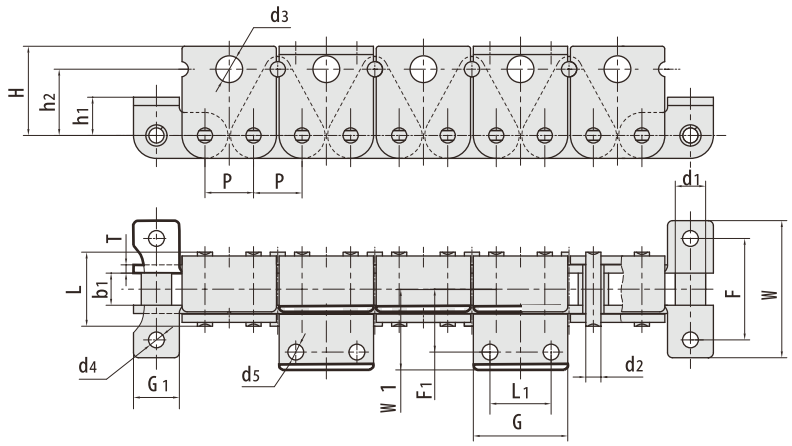

RBL chain number	Pitch P mm	Roller diameter b1 max mm	Width between inner plates b1 min mm	Pin diameter d2 max mm	Pin length L1 max mm	Tensile strength Q min kN/LBF	Weight q kg/m
12AH-TB35	19.05	11.91	12.57	5.94	29.2	31.8/7227	4.35

RBL chain number	H mm	h2 mm	d3 mm	F mm	W mm	G1 mm	h1 mm	d4 mm	T mm	F1 mm	W1 mm	L1 mm	G mm	d5 mm
12AH-TB35	35.0	26.0	10.5	40.0	54.0	18.0	15.0	6.2	3.25	24.8	31.8	24.0	37.0	6.2

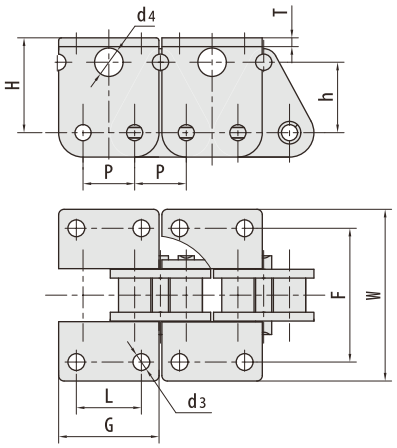

RBL chain number	P mm	L mm	G mm	F mm	W mm	H mm	h mm	d3 mm	d4 mm	T mm
12AH-TB35F1	19.05	24	37	49.6	63.6	35	23.5	6.2	-	3.25

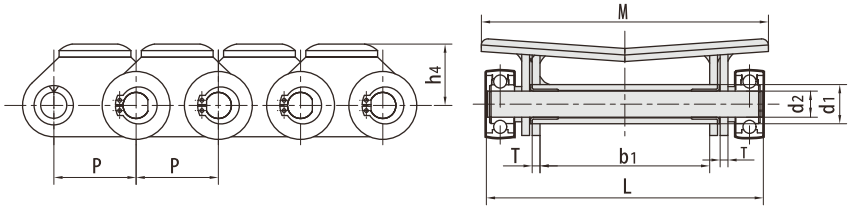

RBL chain number	Pitch	Roller diameter	Width between inner plates	Pin diameter	Pin length	Plate thickness	Attachment dimension		Tensile strength	Average Tensile strength
	P mm	b1 max mm	b1 min mm	d2 max mm	L max mm	T max mm	M mm	h4 mm	Q min kN/LBF	Qo kN
63PF2	63.0	30.0	130.0	20.0	213	6.0	220.0	50.0	160.0/35968	176.0
63PF4	63.0	30.0	160.0	20.0	243	6.0	250.0	50.0	160.0/35968	176.0
63PF5	63.0	30.0	110.0	20.0	193	6.0	200.0	50.0	160.0/35968	176.0
63PF11	63.0	30.0	230.0	20.0	313	6.0	320.0	50.0	160.0/35968	176.0

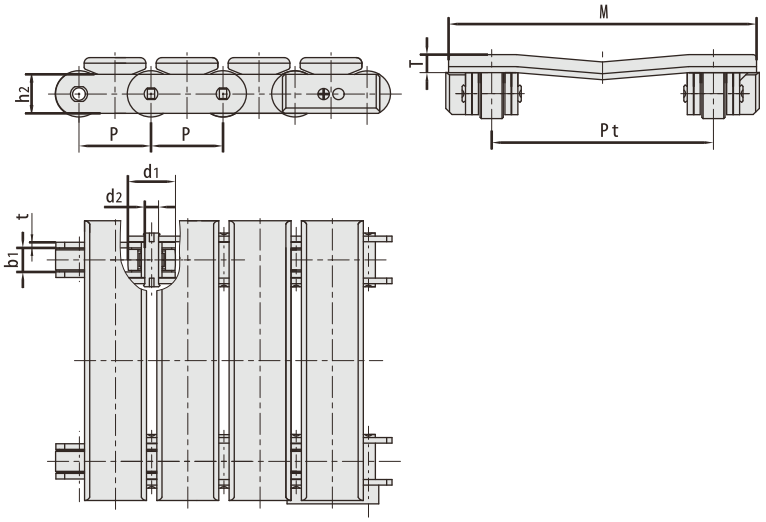

RBL chain number	Pitch	Width between inner plates	Pin diameter	Roller diameter	plate depth	Plate thickness	Attachment dimension			Tensile strength
	P mm	b1 min mm	d2 max mm	b1 max mm	h2 max mm	t max mm	Pt mm	T mm	M mm	Q min kN/LBF
P63F16	63.0	21.5	12.0	42.0	35.0	5.0	180.0	15.0	250.0	120.0/26994
P63F25	63.0	24.0	14.0	42.0	35.0	5.0	180.0	15.0	250.0	100.0/22495
*P63.5F23	63.5	19.0	11.5	40.0	35.0	5.0	236.0	15.0	300.0	100.0/22495

* No bearings in the roller

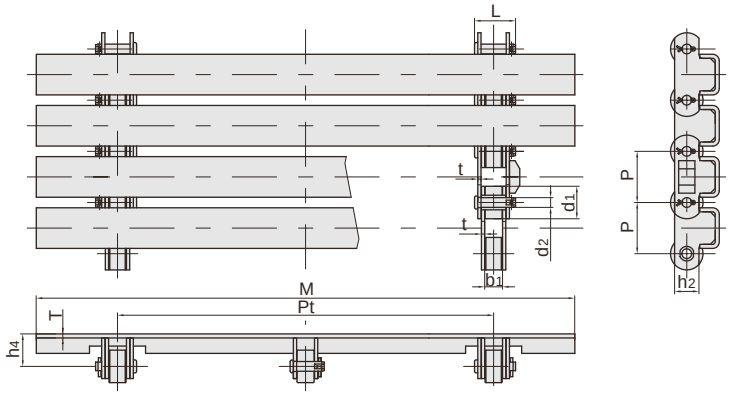

RBL chain number	Pitch	Pin diameter	Width between inner plates	Pin diameter	Pin length	plate depth	Plate thickness	Attachment dimension				Tensile strength
	P mm	d1 max mm	b1 min mm	d2 max mm	L max mm	h2 max mm	t max mm	Pt mm	M mm	h4 mm	T mm	Q min kN/LBF
P63F40	63.0	40.0	22.0	12.0	51.0	30.0	4.0	600	800	40	5	63.0/14162

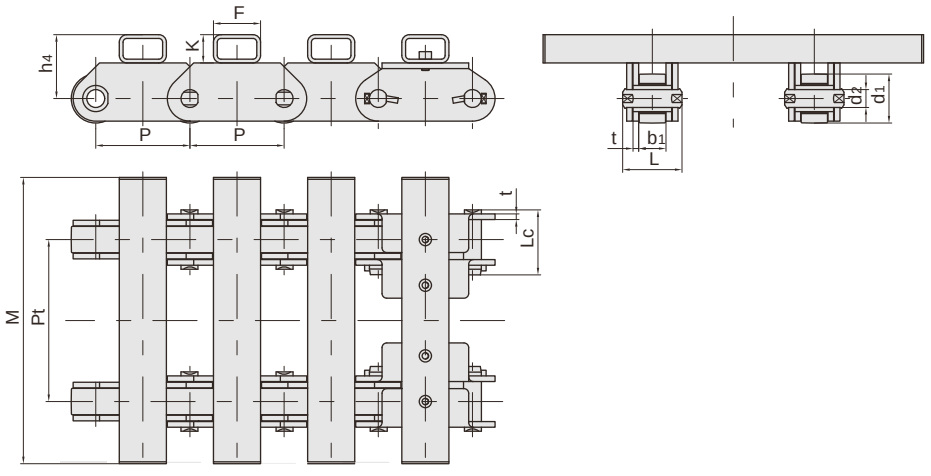

RBL chain number	Pitch	Pin diameter	Width between inner plates	Pin diameter	Pin length	plate depth	Plate thickness	Attachment dimension					Tensile strength
	P mm	d1 max mm	b1 min mm	d2 max mm	L max mm	h2 max mm	t max mm	F mm	K mm	Pt mm	M mm	h4 mm	Q min kN/LBF
P100F361	100	52	29	19	63	69	6	50	30	572	804	68	200.0/44960

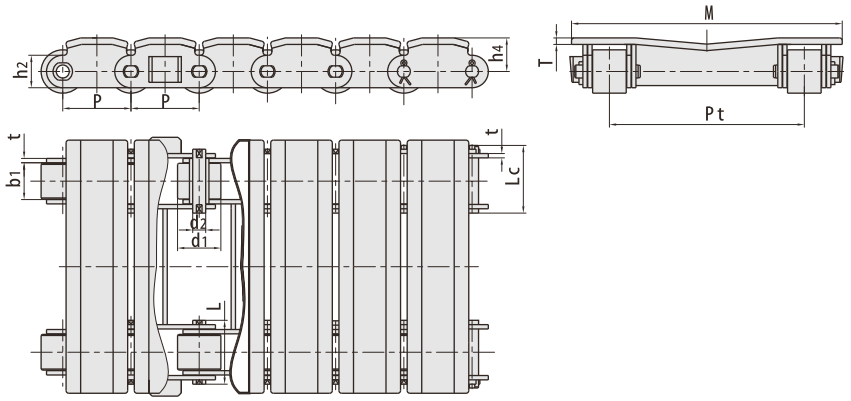

RBL chain number	Pitch	Pin diameter	Width between inner plates	Pin diameter	Pin length		plate depth	Plate thickness	Attachment dimension				Tensile strength
	P	d1 max	b1 min	d2 max	L max	Lc max	h2 max	t max	Pt	M	h4	T	Q min
	mm	mm	mm	mm	mm	mm	mm	mm	mm	mm	mm	mm	kN/LBF
FV63F18-P-63	63.0	40.0	22.0	12.0	45.6	50.0	30.0	4.0	180	240	31	6	86.7/19490

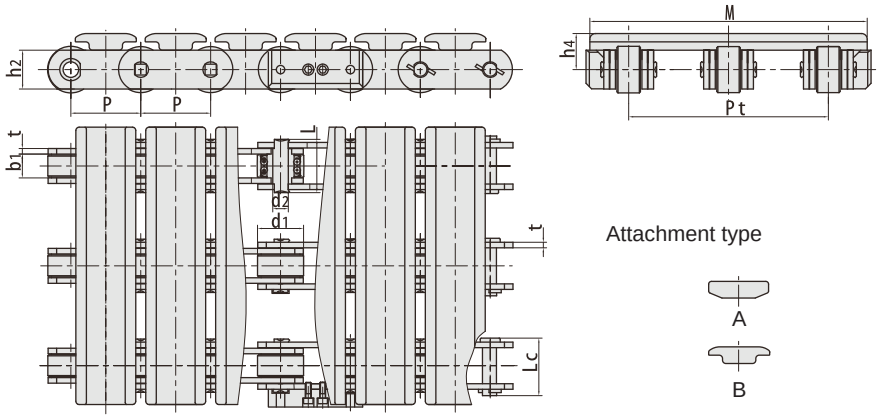

RBL chain number	Pitch	Pin diameter	Width between inner plates	Pin diameter	Pin length		plate depth	Plate thickness	Attachment dimension			Tensile strength	Atlachment type
	P	d1 max	b1 min	d2 max	L max	Lc max	h2 max	t max	Pt	M	h4	Q min	
	mm	mm	mm	mm	mm	mm	mm	mm	mm	mm	mm	kN/LBF	
P63F33 P63F45	63	42.0	24.0	14.0	51.0	56.0	35.0	5.0	1130	1200	32.5	100.0/22480	A B

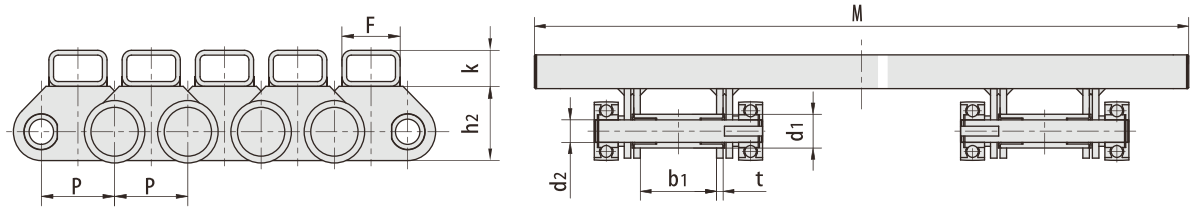

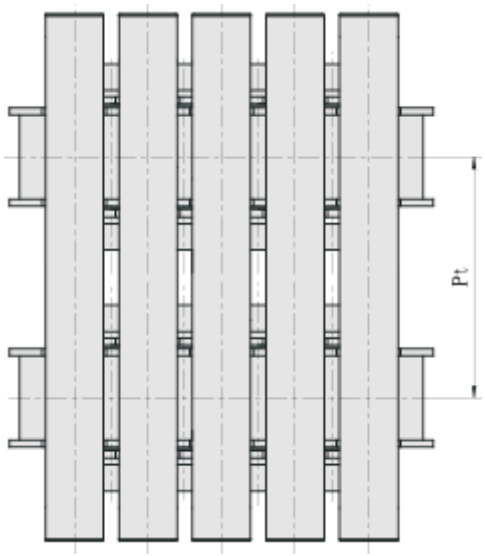

RBL chain number	Pitch	Width between inner plates	Pin diameter	Bush diameter	plate depth	Plate thickness	Attachment dimension				Tensile strength
	P mm	b1 min mm	d1 max mm	d1 max mm	h2 max mm	t max mm	F mm	K mm	Pt mm	M mm	Q min kN/LBF
P63F23	63.0	70.0	20.0	30.0	61.8	6.0	50.0	30.0	688.0	1200.0	160.0/35993

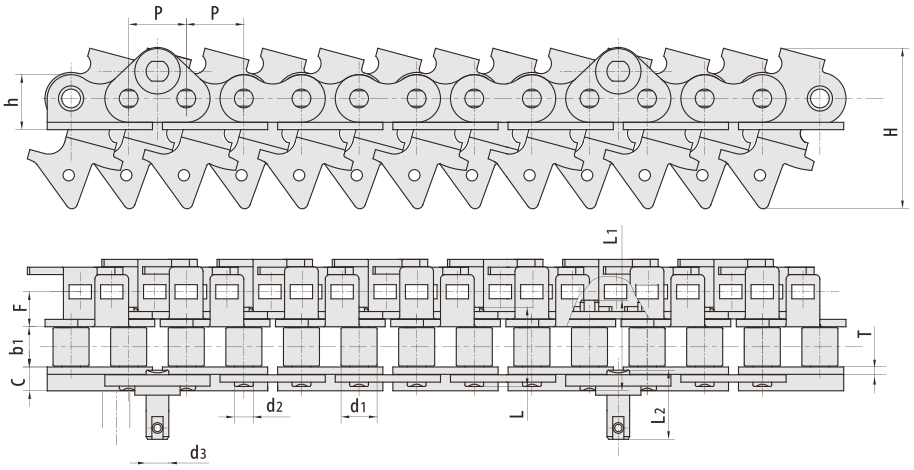

RBL chain number	Pitch	Pin diameter	Width between inner plates	Pin diameter		Pin length			Plate dimension		Attachment dimension			Tensile strength
	P mm	d1 max mm	b1 min mm	d2 max mm	d3 max mm	L max mm	L1 max mm	L2 max mm	h mm	T mm	h4 mm	F mm	C mm	Q min kN/LBF
16AF90	25.4	15.88	15.75	7.92	10.0	32.7	38.4	43.1	28.3	3.25	70.0	14.5	10.00	55.6/12499
HX16AF42	25.4	15.88	19.00	7.92	10.0	35.6	41.0	43.4	24.3	3.10	70.6	14.5	10.15	54.0/12139
16BF10	25.4	15.88	19.00	8.28	10.0	36.1	41.0	43.1	25.0	3.10	70.5	15.5	10.15	40.0/9090
16BF27	25.4	15.88	19.00	8.28	10.0	36.1	41.0	43.1	25.0	3.10	85.0	17.0	10.15	40.0/9090
16BF57	25.4	15.88	19.00	7.92	10.0	36.5	41.4	43.1	28.3	3.25	70.0	14.5	10.00	54.0/12139
HX16BF2	25.4	15.88	19.00	7.92	10.0	35.6	41.0	47.5	24.3	3.10	70.6	14.5	10.15	54.0/12139
HX16BF8	25.4	15.88	19.00	8.28	10.0	36.1	41.0	43.4	25.0	3.10	70.5	15.5	10.15	54.0/12139
HX16BF27	25.4	15.88	19.00	8.28	10.0	36.1	41.0	43.1	25.0	3.10	70.5	18.5	10.15	56.0/12589

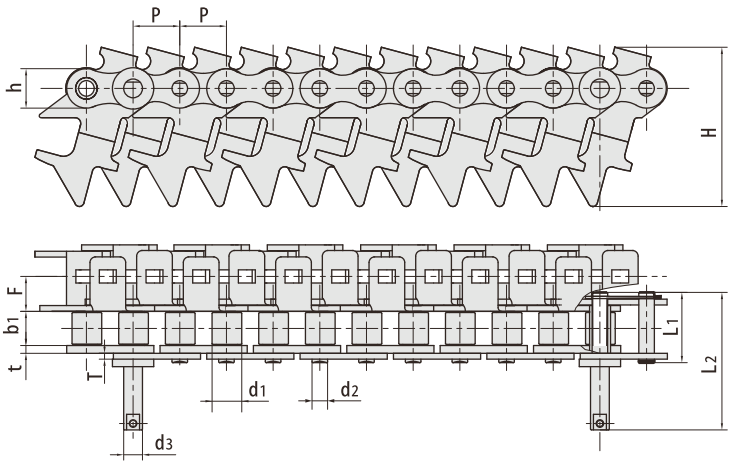

RBL chain number	Pitch	Roller diameter	Width between inner plates	Pin diameter		Pin length		Plate dimension			Assembly dimension		Tensile strength
	P mm	d1 max mm	b1 min mm	d2 max mm	d3 min mm	L max mm	Lc max mm	h mm	T mm	t mm	H mm	F mm	Q min kN/LBF
16AF86	25.4	15.88	15.75	7.92	10.0	36.5	76.7	24.0	3.25	3.25	70.0	14.6	55.6/12499
16BF12	25.4	15.88	18.00	8.28	10.0	37.4	73.2	21.0	3.10	4.15	85.0	18.5	40.0,6992

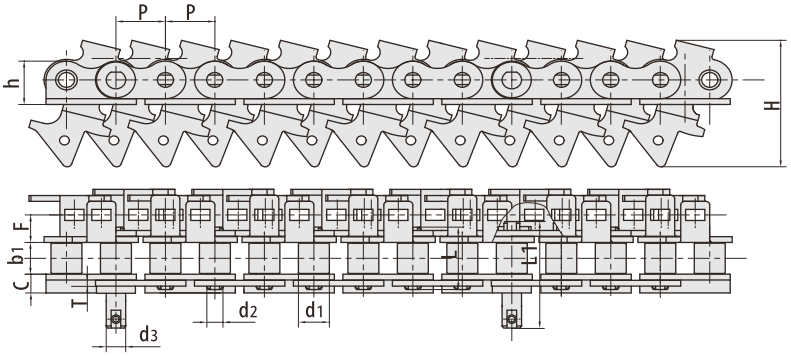

RBL chain number	Pitch	Roller diameter	Width between inner plates	Pin diameter		Pin length		Plate dimension		Assembly dimension			Tensile strength
	P mm	d1 max mm	b1 min mm	d2 max mm	d3 min mm	L max mm	L1 max mm	h mm	T mm	H mm	F mm	C mm	Q min kN/LBF
16AF27	25.4	15.88	15.75	7.92	10.0	32.7	75.2	28.3	3.25	71.0	14.6	13.0	40.0,6992
HX16AF32	25.4	15.88	15.75	7.92	10.0	40.9	81.1	28.3	3.25	69.5	29.7	12.0	55.6/12499
HX16AF4	25.4	15.88	17.00	7.92	10.0	40.9	79.1	27.5	4.00	67.8	17.5	11.0	55.6/12499
HX16AF29	25.4	15.88	15.75	7.92	10.0	32.7	76.7	28.3	3.25	70.6	14.6	10.0	55.6/12499
HX16BF10	25.4	15.88	19.00	8.28	10.0	36.1	79.5	25.0	3.10	70.6	15.5	10.15	40.0,6992

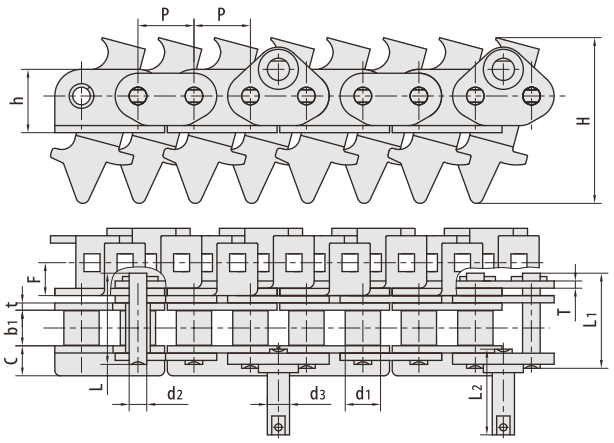

RBL chain number	Pitch	Roller diameter	Width between inner plates	Pin diameter		Pin length			Plate dimension		Assembly dimension			Tensile strength
	P mm	d1 max mm	b1 min mm	d2 max mm	d3 mm	L max mm	L1 max mm	L2 max mm	h mm	t/T mm	H mm	F mm	C mm	Q min kN/LBF
HX16AF10	25.4	15.88	15.75	7.92	10.0	43.4	44.9	43.1	28.3	3.25	70.3	14.6	10.0	55.6/12499

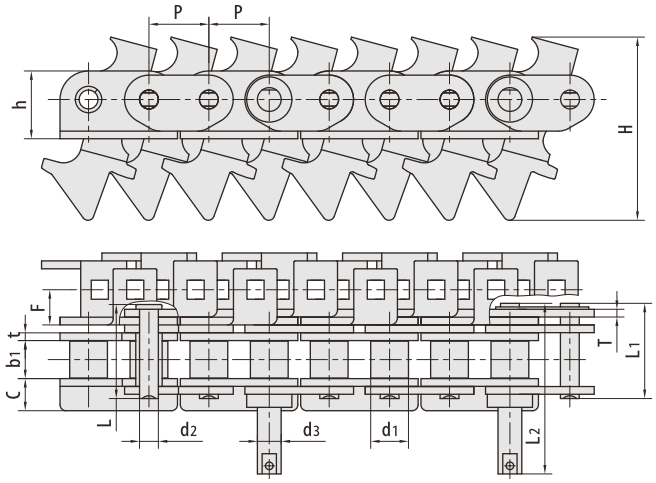

RBL chain number	Pitch	Roller diameter	Width between inner plates	Pin diameter		Pin length			Plate dimension		Assembly dimension			Tensile strength
	P mm	d1 max mm	b1 min mm	d2 max mm	d3 mm	L max mm	L1 max mm	L2 max mm	h mm	t/T mm	H mm	F mm	C mm	Q min kN/LBF
HX16AF27	25.4	15.88	15.75	7.92	10.0	41.9	41.8	82.1	28.3	3.25	70.6	15.6	10.0	55.6/12499
HX16AF60	25.4	15.88	15.75	7.92	10.0	41.5	40.9	81.1	28.3	3,25/3.0	70.5	15.4	10.0	55.6/12499

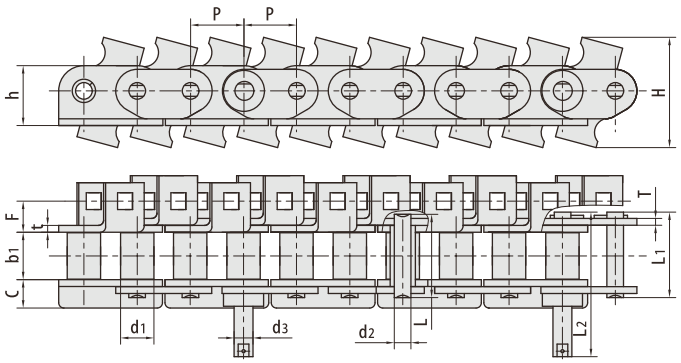

RBL chain number	Pitch	Roller diameter	Width between inner plates	Pin diameter		Pin length			Plate dimension		Assembly dimension			Tensile strength
	P mm	d1 max mm	b1 min mm	d2 max mm	d3 mm	L max mm	L1 max mm	L2 max mm	h mm	t/T mm	H mm	F mm	C mm	Q min kN/LBF
16AF7	25.4	15.88	15.75	7.92	7.92	-	36.5	67.9	28.3	3.25	59.1	13.5	13.0	40.0/8992
16AF73	25.4	15.88	15.75	7.92	10.0	32.7	36.5	73.3	28.3	3.25	52.7	16.0	10.0	55.6/12499
HX16AF30	25.4	15.88	25.00	7.92	10.0	45.2	48.4	88.8	28.4	4.00	52.8	16.0	12.0	56.7/12746
HX16AF38	25.4	15.88	15.75	7.92	7.92	32.7	36.5	73.3	28.3	3.25	52.7	16.0	10.0	55.6/12499
HX16AF43	25.4	15.88	19.00	7.92	10.0	39.4	42.5	81.3	25.3	4.00	53.5	16.4	11.5	54.0/12139
HX16AF54	25.4	15.88	15.75	7.92	11.3	-	36.5	79.0	28.3	3.25	62.3	19.0	10.0	55.6/12499

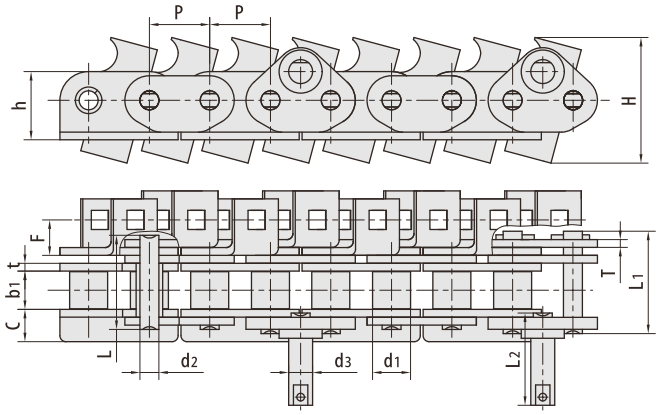

RBL chain number	Pitch	Roller diameter	Width between inner plates	Pin diameter		Pin length			Plate dimension		Assembly dimension			Tensile strength
	P mm	d1 max mm	b1 min mm	d2 max mm	d3 max mm	L max mm	L1 max mm	L2 max mm	h mm	t/T mm	H mm	F mm	C mm	Q min kN/LBF
HX16AF37	25.4	15.88	15.75	7.92	10.0	43.4	44.9	43.1	28.3	3.25/3.0	53.4	16.1	10.0	55.6/12499

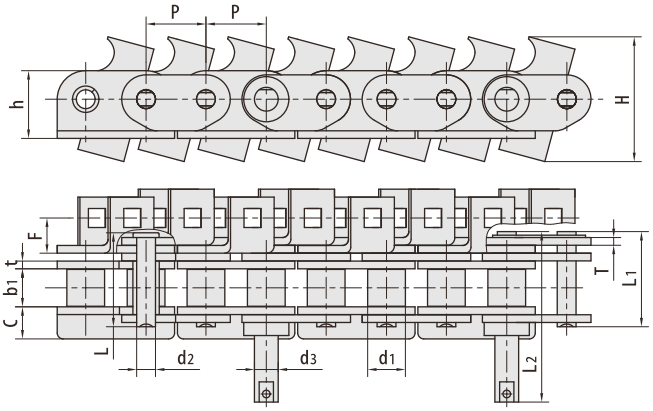

RBL chain number	Pitch	Roller diameter	Width between inner plates	Pin diameter		Pin length			Plate dimension		Assembly dimension			Tensile strength
	P mm	d1 max mm	b1 min mm	d2 max mm	d3 max mm	L max mm	L1 max mm	L2 max mm	h mm	t/T mm	H mm	F mm	C mm	Q min kN/LBF
16AF10	25.4	15.88	15.75	7.92	10.0	41.5	40.9	80.8	28.3	3.25/3.0	44.3	14.5	10.0	55.6/12499
HX16AF49	25.4	15.88	15.75	7.92	10.0	41.5	40.9	80.8	28.3	325/3.0	53.4	16.1	10.0	55.6/12499
HX16AF51	25.4	15.88	15.75	7.92	10.0	41.5	40.9	81.1	28.3	3.25/3.0	44.3	15.2	10.0	55.6/12499
HX16AF61	25.4	15.88	15.75	7.92	10.0	41.5	40.9	81.1	28.3	3.25/3.0	53.7	15.6	10.0	55.6/12499
HX16AF24	25.4	15.88	19.00	7.92	10.0	44.8	44.2	84.4	28.3	3.25/3.0	53.4	16.1	10.0	55.6/12499
HX16AF25	25.4	15.88	19.00	7.92	10.0	44.8	44.2	84.4	28.3	3.25/3.0	53.7	14.8	10.0	55.6/12499

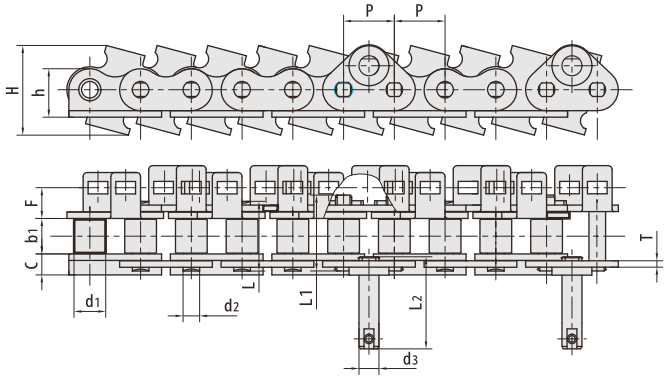

RBL chain number	Pitch	Roller diameter	Width between inner plates	Pin diameter		Pin length			Plate dimension		Assembly dimension			Tensile strength
	P mm	d1 max mm	b1 min mm	d2 max mm	d3 max mm	L max mm	L1 max mm	L2 max mm	h mm	t/T mm	H mm	F mm	C mm	Q min kN/LBF
HX16AF16	25.4	15.88	19.0	7.9	9.5	37.6	43.0	43.4	30.45	4.00	44.8	12.3	11.5	54.0/12148

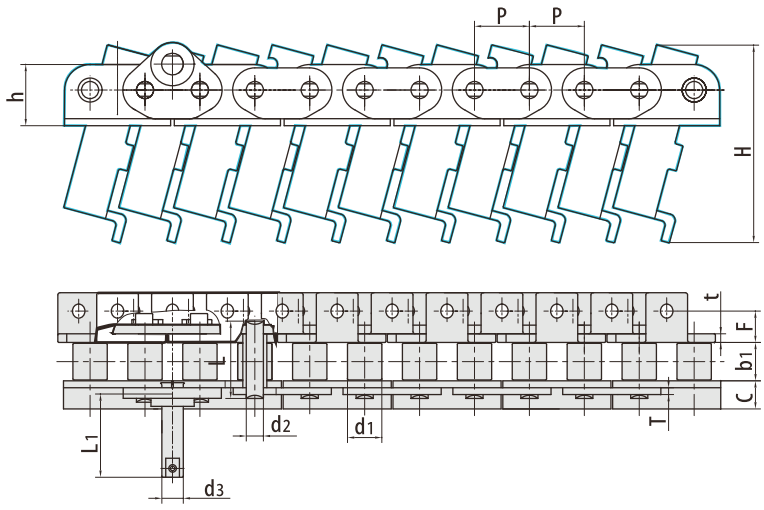

RBL chain number	Pitch	Roller diameter	Width between inner plates	Pin diameter		Pin length		Plate dimension			Assembly dimension			Tensile strength
	P mm	d1 max mm	b1 min mm	d2 max mm	d3 max mm	L max mm	L1 max mm	h mm	T mm	t mm	H mm	F mm	C mm	Q min kN/LBF
16AF18	25.4	15.88	17.00	7.92	10.0	36.2	48.6	28.3	3.25	4.0	92.0	14.7	13.0	40.0/8992

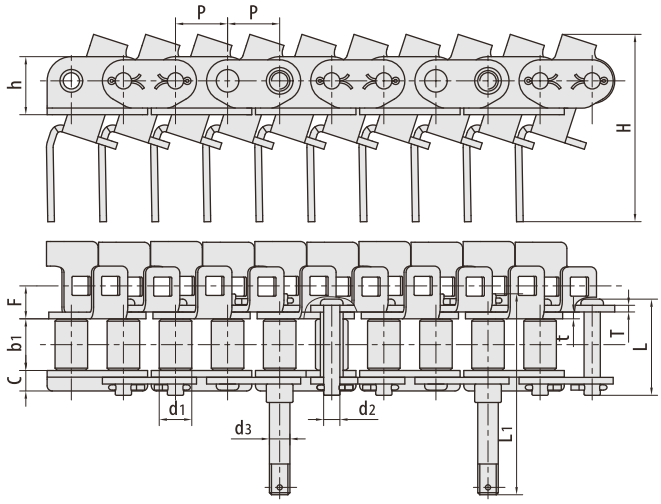

RBL chain number	Pitch	Roller diameter	Width between inner plates	Pin diameter		Pin length		Plate dimension		Assembly dimension			Tensile strength
	P mm	d1 max mm	b1 min mm	d2 mm	d3 mm	L max mm	L1 mm	h mm	t/T mm	H mm	F mm	C mm	Q min kN/LBF
HX16AF13	25.4	15.88	25.00	7.92	10.0	47.0	98.0	28.3	3.25	91.8	16.05	10.0	55.6/12499

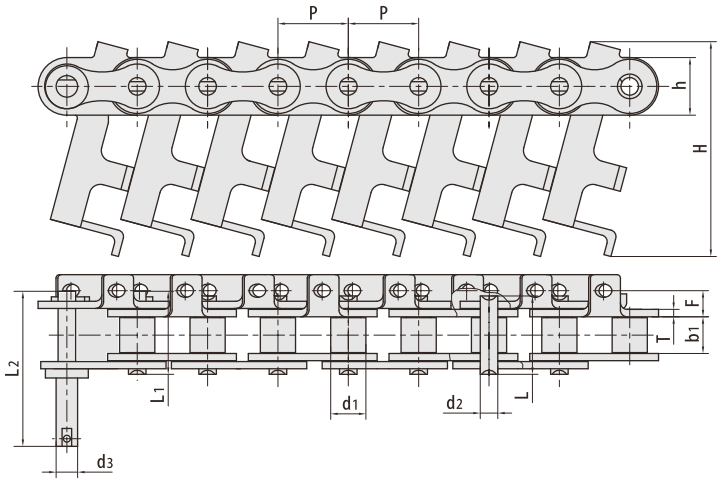

RBL chain number	Pitch	Roller diameter	Width between inner plates	Pin diameter		Pin length			Plate dimension		Assembly dimension		Tensile strength
	P mm	d1 max mm	b1 min mm	d2 max mm	d3 max mm	L max mm	L1 max mm	L2 max mm	h mm	T mm	H mm	F mm	Q min kN/LBF
HXP31.75	31.75	15.88	17.80	7.92	10.0	36.2	38.4	73.7	26.0	3.25	96.9	14.7	55.6/12499

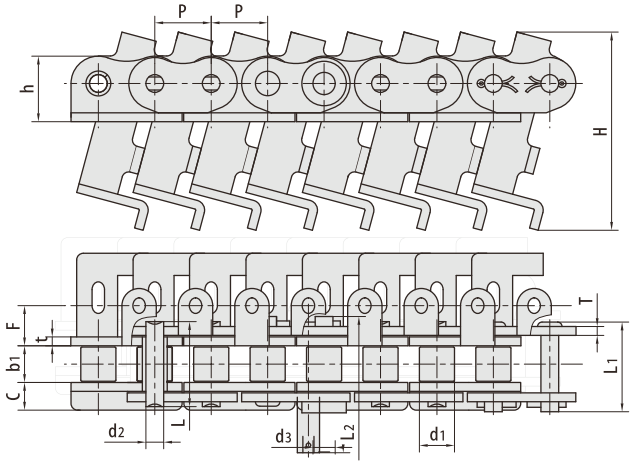

RBL chain number	Pitch	Roller diameter	Width between inner plates	Pin diameter		Pin length			Plate dimension		Assembly dimension			Tensile strength
	P mm	d1 max mm	b1 min mm	d2 max mm	d3 max mm	L max mm	L1 max mm	L2 max mm	h mm	t/T mm	H mm	F mm	C mm	Q min kN/LBF
HX16AF56	25.4	15.88	16.00	7.92	10.0	37.7	42.9	86.0	29.3	4.00	89.2	19.1	12.3	68.9/15488

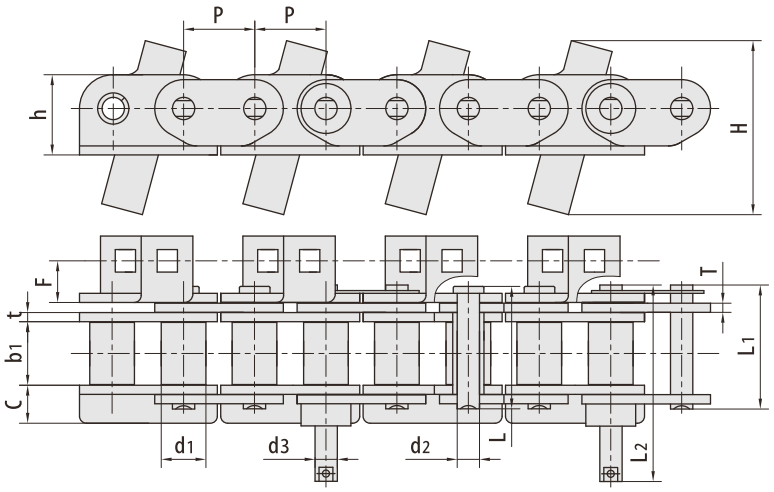

RBL chain number	Pitch	Roller diameter	Width between inner plates	Pin diameter		Pin length			Plate dimension		Assembly dimension			Tensile strength
	P mm	d1 max mm	b1 min mm	d2 max mm	d3 max mm	L max mm	L1 max mm	L2 max mm	h mm	t/T mm	H mm	F mm	C mm	Q min kN/LBF
HX16AF39	25.4	15.88	15.75	7.92	10.0	38.5	38.7	79.0	28.3	3.25	64.8	14.5	10.0	55.6/12499
HX16AF47	25.4	15.88	15.75	7.92	10.0	-	39.5	80.5	28.3	3.25	64.8	14.5	10.0	55.6/12499

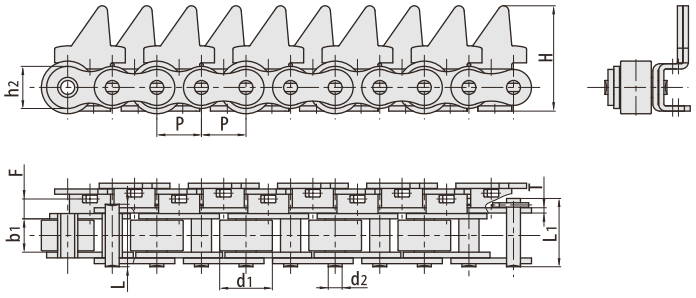

RBL chain number	Pitch	Roller diameter	Width between inner plates	Pin diameter	Pin length		Plate dimension		Assembly dimension		Tensile strength
	P mm	d1 mm	b1 mm	d2 mm	L mm	L1 mm	h mm	T mm	H mm	F mm	Q min kN/LBF
HXP25.4F1	25.4	30.00	19.00	7.92	35.6	38.9	20.5	3.0	60.00	30.55	55.6/12499

A type

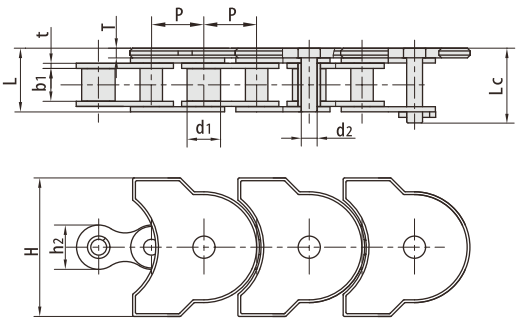

B type

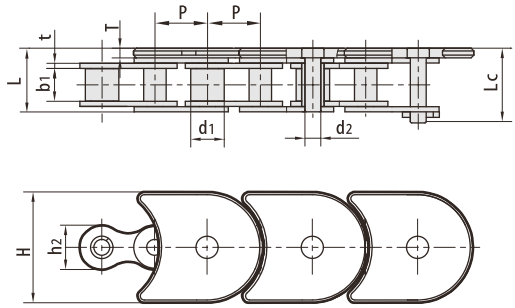

RBL chain number	Pitch	Roller diameter	Width between inner plates	Pin diameter	Pin length		Plate dimension		Attachment dimension		Tensile strength	Weight	Type
	P mm	d1 min mm	b1 min mm	d2 max mm	L max mm	Lc max mm	h2 max mm	t mm	H mm	T mm	Q min kN/LBF	q kg/m	
T0S50	19.05	12.07	11.68	5.72	23.3	27.28	16.0	1.85	50	3.50	29.0/6591	2.35	A
T0S50F1	25.40	12.07	11.68	5.72	22.8	27.28	21.0	1.85	50	3.50	29.0/6591	2.95	B
T0S80	38.10	15.88	15.75	7.92	32.4	-	27.3	3.25	82.6	3.25	55.6/12636	4.91	B

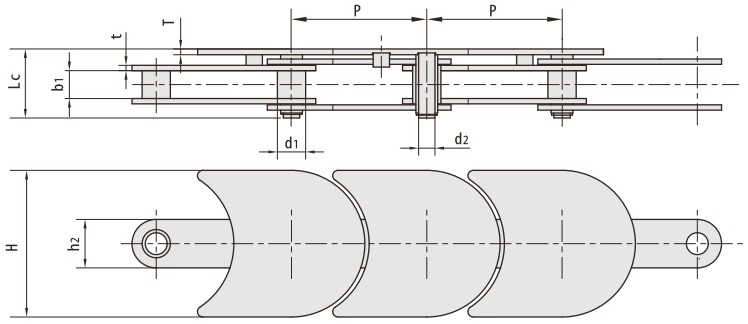

RBL chain number	Pitch	Bush diameter	Width between inner plates	Pin diameter	Pin length	Plate dimension		Attachment dimension		Tensile strength	Weight
	P mm	d1 min mm	b1 min mm	d2 max mm	Lc max mm	h2 max mm	t mm	H mm	T mm	Q min kN/LBF	q kg/m
76HP	76.2	15.92	15.7	9.2	37.5	27.3	3.0	82.6	3.0	45.0/10227	2.76

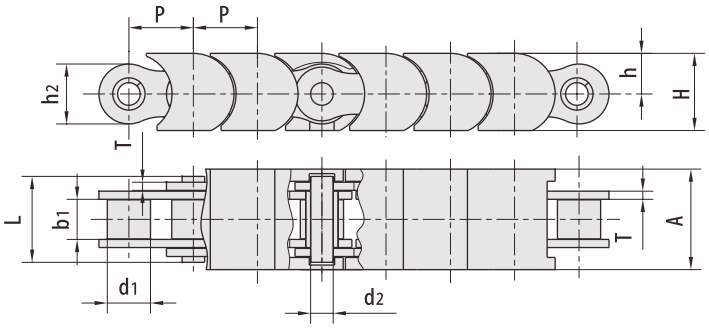

RBL chain number	Pitch	Roller diameter	Width between inner plates	Pin diameter	Pin length	Plate dimension		Plastic attachment dimension			Tensile strength
	P mm	d1 min mm	b1 min mm	d2 max mm	L max mm	h2 max mm	T max mm	A mm	h mm	H mm	Q min kN/LBF
08B-TP	12.700	8.51	7.75	4.45	16.7	11.8	1.60	19.8	8.0	15.2	18.0/4091
10B-TP	15.875	10.16	9.65	5.08	19.5	14.7	1.70	24.8	9.5	17.5	22.4/5091
12B-TP	19.050	12.07	11.68	5.72	22.5	16.0	1.85	29.8	11.0	19.8	29.0/6591

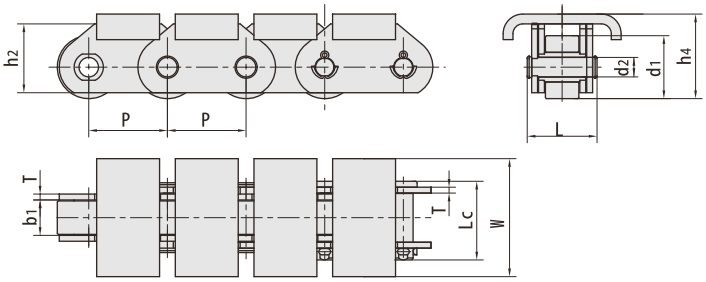

RBL chain number	Pitch	Roller diameter	Width between inner plates	Pin diameter	Pin length		Plate dimension		Attachment dimension		Tensile strength	Weight
	P mm	d1 min mm	b1 min mm	d2 max mm	L max mm	Lc max mm	h2 max mm	T max mm	W mm	h4 mm	Q min kN/LBF	q kg/m
P40F3	40.0	32.0	18.0	10.00	36.1	40.2	35.0	3.0	60.0	43.00	40.0/9091	7.27
P40F5	40.0	32.0	18.0	10.00	36.1	40.2	35.0	3.0	59.5	42.00	40.0/9091	7.16
P63F6	63.0	48.0	25.0	14.00	52.0	57.0	45.0	5.0	130.0	56.50	63.0/14172.3	16.22
P63F9	63.0	48.0	25.0	14.00	52.0	57.0	45.0	5.0	80.0	56.50	63.0/14172.3	13.66
P63F26	63.0	48.0	25.0	14.00	56.0	61.0	45.0	6.0	95.0	56.50	70.0/15736	14.10
P63F15	63.0	40.0	20.0	12.00	43.2	47.0	40.0	4.0	90.0	30.00	60.0/13488	12.14
P63F31	63.0	48.0	25.0	14.00	52.0	57.0	45.0	5.0	105.0	55.50	120.0/26976	14.05
P63F32	63.0	48.0	25.0	14.00	56.0	61.0	45.0	6.0	110.0	56.50	70.0/15736	16.80
P76.2F19	76.2	38.1	27.5	11.10	59.1	63.5	35.0	6.4	63.5	50.05	150.0/33721	11.35
P76.2F27	76.2	47.6	19.0	19.05	69.5	77.0	50.0	10.0	82.0	78.80	90.0/20232	15.47
P100F174	100.0	48.0	25.4	14.00	59.0	63.4	44.5	6.4	101.6	54.90	90.0/20232	14.05

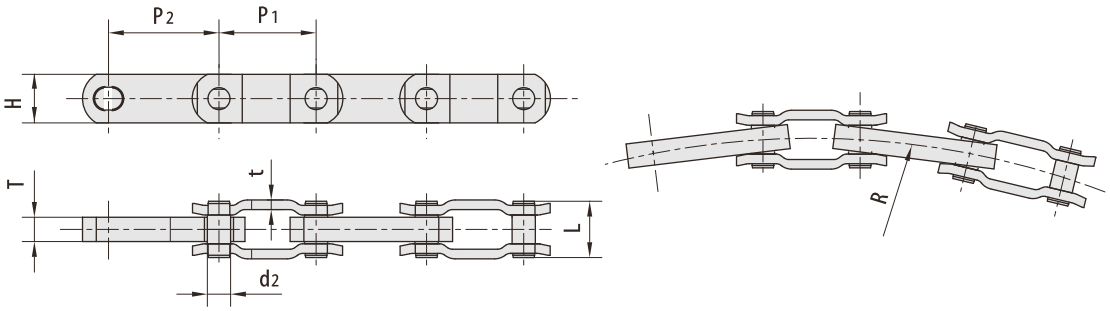

RBL chain number	Pitch		Thickness of iner plates	Pin diameter	Pin length	Plate dimension		Side bow radius	Tensile strength	Average Tensile strength	Weight
	P1 mm	P2 mm	T mm	d2 max mm	L max mm	H max mm	t mm	R min mm	Q min kN/LBF	Qo kN	q kg/m
3500	63.5	76.2	15.9	14.27	37.0	32.0	6.3	508.0	160.0/36363	196.0	5.14

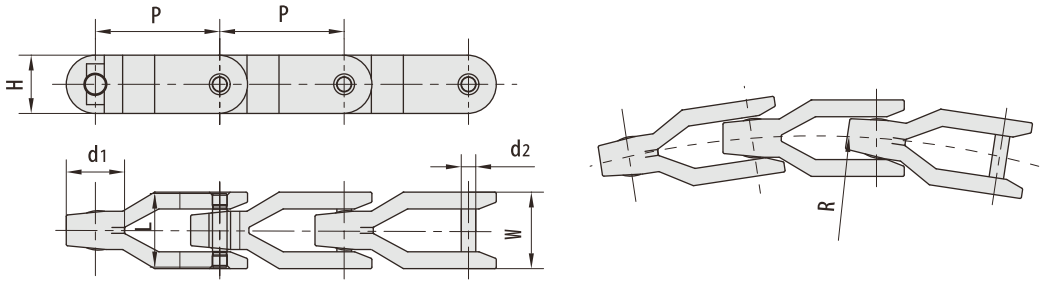

RBL chain number	Pitch	Pin diameter	Pin length	Plate dimension			Side bow radius	Tensile strength	Weight
	P mm	d2 max mm	L mm	H max mm	W max mm	d1 mm	R min mm	Q min kN/LBF	q kg/m
CC1400	81.3	9.5	48.0	38.5	50.0	38.0	500	30.0/6818	1.99

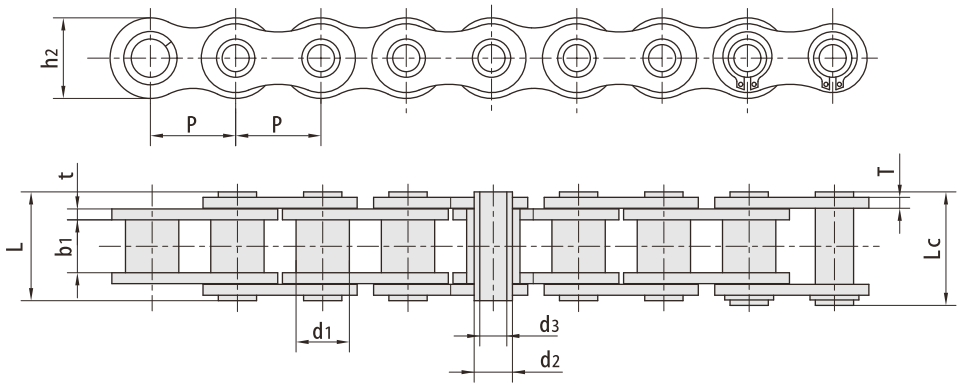

RBL chain number	Pitch	Bush diameter	Width between inner plates	Pin diameter		Pin length		inner plate depth	Plate thickness	Tensile strength	Average Tensile strength	Weight
	P mm	d1 min mm	b1 min mm	d2 max mm	d3 min mm	L max mm	Lc max mm	T max mm	t/T max mm	Q min mm	Qo kN	q kg/m
08BHPF	12.700	8.51	7.75	6.55	4.50	16.4	17.6	11.80	1.60/1.30	11.1/2523	12.10	0.56
08BHPF5	12.700	8.51	7.75	6.30	4.50	16.8	18.0	12.00	1.60	9.6/2182	10.60	0.62
08BHPF9	12.700	8.51	7.75	6.30	4.50	16.5	17.6	12.10	1.50	10.5/2360	11.55	0.58
10BHPF3	15.875	10.16	9.65	7.02	5.13	19.5	20.5	14.70	1.70	10.0/2272	11.50	0.86
10BHPF4	15.875	10.16	9.50	7.20	5.00	19.8	21.3	14.00	2.03/1.60	12.5/2840	14.00	0.82
12BHPF2	19.050	12.07	11.68	8.09	6.00	22.7	23.9	16.10	1.85	14.0/3180	16.00	0.82
12BHPF3	19.050	12.07	11.70	8.22	5.75	23.6	24.9	16.20	2.42/1.85	16.0/3636	18.00	1.14
16BHPF3	25.400	15.88	17.02	11.50	8.20	35.3	37.0	23.20	4.00/3.10	49.0/11136	52.20	2.26
16BHPF4	25.400	11.70	13.50	8.00	4.30	28.9	30.2	21.30	3.00	30.0/6818	33.00	1.81
40HP	12.700	7.95	7.85	5.63	4.00	16.5	17.6	12.00	1.50	11.0/2500	12.20	0.54
08BHPF7	12.700	8.51	9.20	6.55	4.10	17.8	19.0	11.80	1.60	11.1/2523	12.10	0.64
08BHP	12.700	8.51	7.75	6.55	4.50	16.4	17.6	11.80	1.30	11.1/2523	12.10	0.52
50HP	15.875	10.16	9.40	7.03	5.13	20.7	21.9	15.09	2.03	20.0/4545	22.60	0.91
50HPF4	15.875	10.16	8.80	7.03	5.13	19.9	21.1	15.09	2.03	18.0/4180	19.20	0.89
50H-HP	15.875	10.16	9.40	7.03	5.13	22.6	23.7	15.09	2.42	20.0/4545	22.60	1.02
60HP	19.050	11.91	12.70	8.31	6.00	25.8	26.8	18.00	2.42	24.0/5455	26.90	1.29
60HPF1	19.050	11.91	12.70	8.31	5.01	25.5	26.8	18.00	2.42	28.0/6364	30.90	1.37
80HP	25.400	15.88	15.75	11.40	8.05	32.5	33.8	24.00	3.25	50.0/11364	52.00	2.26
80HPF1	25.400	11.70	13.50	7.80	4.00	27.0	28.4	21.50	2.42	27.44/6236	29.30	1.50
80HPF2	25.400	15.88	15.75	11.40	8.40	32.5	33.8	24.00	3.25	45.0/10227	48.00	2.23
80H-HP	25.400	15.88	15.75	11.40	8.05	35.7	37.0	24.00	4.00	50.0/11364	52.00	2.63
80HPF3	25.400	15.88	15.88	11.40	7.96	32.4	33.8	23.24	3.25	50.0/11364	52.00	2.26
80HPF4	25.400	11.70	13.50	7.80	4.10	29.0	30.5	21.50	3.00	40.0/9091	43.20	1.77
80HPF5	25.400	15.88	15.80	11.40	8.05	31.0	32.50	24.00	3.25/2.42	34.0/7647	37.00	2.28
HB38.1F6	38.100	18.00	15.20	14.00	10.20	34.5	36.50	27.00	3.70	45.0/10227	48.00	2.46
HB41.3	41.300	10.16	9.65	7.10	5.40	20.4	-	16.00	2.03	13.0/2924	14.30	0.67
HB41.75F5	41.750	17.11	19.90	14.11	10.30	39.0	40.4	25.26	4.00	49.0/11136	53.90	2.11
A2080HP	50.800	15.88	15.75	11.40	8.05	32.4	33.8	24.00	3.25	42.3/9615	46.10	1.60

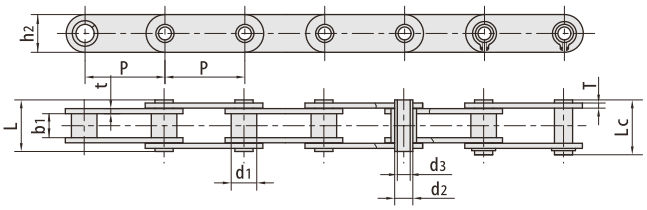

RBL chain number	Pitch	Bush diameter	Width between inner plates	Pin diameter		Pin length		inner plate depth	Plate thickness	Tensile strength	Average Tensile strength	Weight
	P mm	d1 min mm	b1 min mm	d2 max mm	d3 min mm	L max mm	Lc max mm	T max mm	t/T max mm	Q min mm	Qo kN	q kg/m
HP12.5	12.500	8.51	8.20	6.65	4.50	16.4	17.6	11.60	1.5/1.3	8.0/1819	8.8	0.61
C08BHP	12.700	8.51	7.75	6.55	4.50	16.4	17.6	11.80	1.6/1.3	11.0/2500	11.5	0.62
C40HP	12.700	7.95	7.85	5.63	4.00	16.5	17.6	12.00	1.50	11.0/2500	12.2	0.64
C50HP	15.875	10.16	9.40	7.03	5.13	20.7	21.9	15.09	2.03	20.0/4545	22.6	1.05
C60HP	19.050	11.91	12.70	8.31	6.00	25.8	26.8	18.00	2.42	24.0/5455	26.9	1.52
C80HP	25.400	15.88	15.75	11.40	8.05	32.5	33.8	24.00	3.25	50.0/11364	52.0	2.63
C2040HP	25.400	7.95	7.85	5.63	4.00	16.5	17.6	12.00	1.50	11.0/2500	12.6	0.46
C2040HPF1	25.400	7.95	7.85	5.63	M 4	16.5	17.6	12.00	1.50	9.0/2045	9.9	0.44
C2050HP	31.750	10.16	9.40	7.22	5.12	20.5	21.8	15.00	2.03	20.4/4636	22.8	0.76
C2060HP	38.100	11.91	12.70	8.31	6.00	25.8	26.8	17.00	2.42	24.0/5455	27.1	1.02
C2060H-HP	38.100	11.91	12.70	8.31	6.00	29.2	30.2	17.00	3.25	24.0/5455	27.1	1.29
HB38.1F8	38.100	10.16	9.65	7.10	5.40	20.4	-	16.00	2.03	13.0/2954	14.3	0.67
HB38.1F15	38.100	18.00	21.00	12.00	8.10	47.8	49.0	34.00	5.60	50.0/11364	52.0	5.72
HP40F1	40.000	18.00	22.00	12.00	8.00	47.5	48.2	35.00	5.00	57.0/l3049	63.8	5.38
HP40F2	40.000	18.00	22.00	12.00	8.20	47.5	48.2	35.00	5.00	57.0/13049	63.0	5.37
HP50F1	50.000	26.00	14.50	20.00	14.70	35.3	36.2	40.00	3.10	30.0/6818	33.6	3.98
HP50F7	50.000	18.00	15.00	14.00	10.20	36.0	37.5	26.00	4.00	40.0/9091	43.2	2.56
HP50F10	50.000	18.00	22.00	12.10	8.30	39.5	40.6	30.00	3.00	45.0/10227	48.0	2.73
HP50F16	50.000	18.00	17.00	14.50	10.20	39.0	40.0	27.00	4.00	40.0/9091	44.0	2.83
C2080HP	50.800	15.88	15.75	11.40	8.05	32.5	33.8	24.00	3.25	50.0/11364	52.0	1.81
HB55	55.000	18.00	22.00	14.00	10.00	43.4	44.5	30.00	4.00	50.0/11364	52.0	3.31
HB55F1	55.000	24.00	24.00	17.00	12.00	52.0	53.5	40.00	5.00	90.0/20455	100.0	6.34

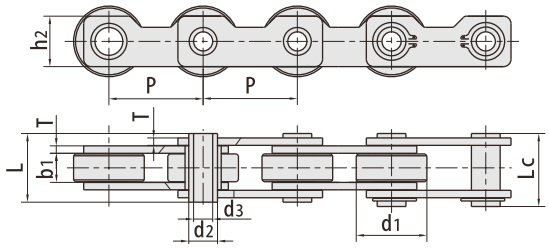

RBL chain number	Pitch	Bush diameter	Width between inner plates	Pin diameter		Pin length		inner plate depth	Plate thickness	Tensile strength	Average Tensile strength	Weight
	P mm	d1 max mm	b1 min mm	d2 max mm	d3 min mm	L max mm	Lc max mm	h2 max mm	t/T max mm	Q min mm	Qo kN	q kg/m
HB50.8F1	50.8	38.1	15.7	15.5	10.3	35.2	36.7	27.2	4.00	55.46/51650	58.8	4.97

Type A

Type B

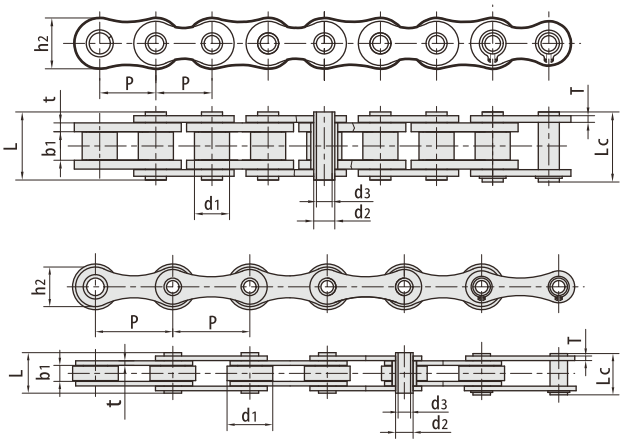

RBL chain number	Pitch	Roller diameter	Width between inner plates	Pin diameter		Pin length		inner plate depth	Plate thickness	Tensile strength	Average Tensile strength	Weight	Type
	P mm	d1 max mm	b1 min mm	d2 max mm	d3 min mm	L max mm	Lc max mm	h2 max mm	t/T max mm	Q min kN/LBF	Qo kN	q kg/m	
10BHB	15.875	10.16	9.65	5.94	4.04	19.30	20.60	14.70	1.70	17.00/3864	20.80	0.86	A
12BHP	19.050	12.07	11.68	6.50	4.00	21.60	22.80	15.90	1.85	23.60/5364	25.90	1.09	A
60HB	19.050	11.91	12.70	7.00	5.01	25.50	26.60	18.00	2.42	20.00/4545	22.40	1.35	A
12AHBF2	19.050	11.91	12.70	7.00	5.10	26.50	27.60	18.00	2.42	20.00/4545	22.40	1.39	A
12BHPF6SLR	19.050	12.07	11.68	6.50	4.04	22.30	23.50	15.90	1.85	23.60/5364	25.96	1.12	A
12BHPF10	19.050	12.07	11.68	6.50	4.00	21.60	22.80	15.90	1.85	23.60/5364	25.90	1.08	A
HP20F1	20.000	12.00	22.00	7.00	5.00	35.70	37.70	18.00	2.42	18.00/4180	19.20	1.89	A
16BHBF1	25.400	15.88	12.70	9.53	7.05	30.80	32.20	23.00	4.15/3.10	40.00/9091	45.00	2.28	A
HB25.4	25.400	20.00	8.00	8.00	5.20	19.50	20.50	17.00	2.03	25.00/5620	28.00	1.30	A
16BHBF4	25.400	15.88	17.02	6.05	4.20	28.00	29.00	14.00	2.03	10.00/2248	11.00	1.50	A
HB25.4F7	25.400	20.00	18.00	8.00	3.00	35.00	36.00	18.00	3.00	25.00/5620	28.80	2.83	B
HB25.4F8	25.400	15.88	8.00	7.10	5.10	16.50	17.70	13.50	1.50	9.00/2024	10.00	0.78	B
HB28.58	28.580	15.88	16.20	8.03	5.50	36.30	37.00	24.00	4.00	22.00/4945	24.20	3.00	A
HP35	35.000	20.00	16.00	13.35	10.20	30.40	31.60	26.30	2.50	23.52/5345	26.40	2.02	A
HB35	35.000	20.00	16.00	14.00	10.20	32.00	33.50	38.10	3.00	40.00/9091	45.00	2.39	A
HB38.1	38.100	20.00	8.00	8.00	5.30	19.60	20.70	17.30	2.03	28.00/5682	28.80	0.98	B
HB38.1F1	38.100	20.00	18.00	10.50	5.10	39.00	40.30	22.00	4.00	60.00/13636	64.30	2.59	B
HB38.1F3	38.100	25.40	12.70	12.00	8.30	27.00	28.60	21.00	2.50	25.00/5620	28.80	1.51	B
HB38.1F4	38.100	20.00	12.70	8.00	5.20	26.00	27.20	17.00	2.42	24.00/5455	26.90	1.48	B
HP38.1F9	38.100	22.20	12.70	11.00	8.15	26.50	27.50	18.00	2.50	22.00/5000	24.40	1.46	B
HB38.1F10	38.100	25.40	25.40	14.63	10.50	54.00	54.30	33.20	6.00/4.80	50.00/11240	55.00	6.10	A
HP40F4	40.000	26.00	10.00	11.40	8.20	26.50	28.00	24.00	3.00	50.00/11240	56.70	2.20	B
B41.4F1	41.400	25.40	15.00	13.80	10.50	35.50	37.00	32.00	4.00	45.00/10116	49.50	3.66	B
HP41.75F1	41.750	17.10	20.20	11.11	8.20	35.70	39.00	21.65	3.10	26.50/6022	29.20	1.60	A
HP41.75F2	41.750	17.10	20.20	11.11	8.20	35.70	41.00	25.26	3.10	49.00/11136	54.80	2.04	A

* Denotes straight side outer plates.

Type A

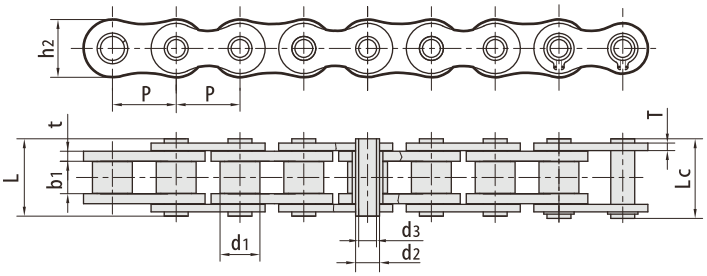

Type B

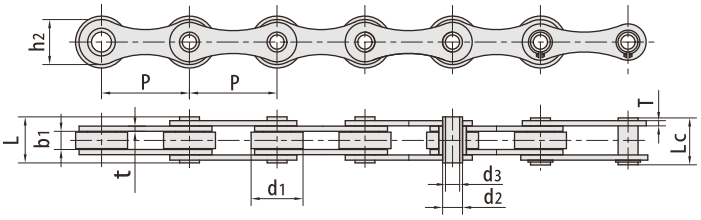

RBL chain number	Pitch	Roller diameter	Width between inner plates	Pin diameter		Pin length		inner plate depth	Plate thickness	Tensile strength	Average Tensile strength	Weight	Type
	P mm	d1 max mm	b1 min mm	d2 max mm	d3 min mm	L max mm	Lc max mm	h2 max mm	t/T max mm	Q min kN/LBF	Qo kN	q kg/m	
HP41.75F3	41.750	17.00	20.50	11.00	8.30	36.00	39.50	21.40	3.00	27.0076136	28.00	1.62	A
HP41.75F6	41.750	17.10	20.20	11.11	8.20	36.70	37.50	25.26	3.10	49.00/11015	53.90	2.04	A
HP50F2	50.000	31.00	15.00	13.20	10.20	36.50	38.00	25.00	4.00	40.00/9091	43.20	3.40	B
DH16500HP	50.000	30.00	10.50	11.40	8.20	27.40	28.60	26.00	3.10	50.00/11240	53.60	2.23	B
HB50F4	50.000	30.00	10.00	11.60	8.00	26.60	30.00	25.40	3.00	60.00/13635	67.20	2.03	B
HB50F1C30	50.000	30.00	10.00	12.00	8.20	26.50	28.10	26.00	3.00	45.00/11016	49.50	2.36	B
HB50.8	50.800	30.00	10.50	11.40	8.20	27.40	28.60	26.00	3.10	50.00/11240	53.60	2.56	B
HB50.8F4	50.800	30.00	10.50	13.60	8.20	27.40	28.90	26.00	3.10	42.00/9545	48.20	2.28	B
HB50.8F14	50.800	30.00	10.00	11.60	8.00	26.60	30.00	25.40	3.00	60.00/I3635	67.20	2.01	B
HB60F6	60.000	30.00	10.00	11.60	8.00	26.60	30.00	26.00	3.00	46.00/10341	50.60	2.06	B
HB60F7	60.000	30.00	10.00	11.60	8.00	26.60	30.00	25.40	3.00	60.00/I3635	66.00	1.82	B
HB63	63.000	30.00	10.00	11.40	8.10	26.70	28.10	26.50	3.10	50.00/11240	53.60	2.07	B
HB63F1	63.000	40.00	10.00	11.40	8.10	26.70	28.10	26.50	3.10	50.00/11240	53.60	2.27	B
HB63F2	63.000	40.00	20.00	11.40	8.10	36.70	38.10	26.50	3.10	50.00/11240	53.60	3.20	B
HB63F3	63.000	40.00	15.00	11.40	8.20	35.60	37.00	26.50	4.00	35.00/7955	38.50	3.90	B
HB63F4	63.000	30.00	20.00	11.40	8.10	36.70	38.10	26.50	3.10	50.00/11240	53.60	2.97	B
HB63F6	63.000	30.00	10.00	11.70	8.20	26.70	28.10	26.50	3.10	50.00/11240	56.70	2.08	B
HB63F7	63.000	40.00	18.00	14.00	10.20	38.00	39.50	28.00	4.00	50.00/11240	56.70	4.26	B
HB63F8	63.000	30.00	20.00	11.70	8.10	36.50	38.00	26.50	3.10	50.00/11240	56.70	2.91	B
HB63F14	63.000	30.00	10.00	11.40	8.10	30.20	31.60	26.50	4.00	50.00/11240	55.00	2.45	B
HB63.SF3	63.500	31.00	15.00	14.00	8.20	31.00	33.00	28.00	3.00	34.00/7647	38.00	2.75	B
HB80F3	80.000	45.00	20.00	24.00	18.00	39.00	40.60	40.00	3.50	75.00/16858	82.50	4.60	B
HB100	100.000	30.00	10.50	11.40	8.20	27.40	28.60	26.00	3.10	50.00/11240	53.60	1.56	B
HB100F8	100.000	30.00	10.00	11.60	8.00	26.60	30.00	25.40	3.00	60.00/13635	67.20	1.37	B
HB100F16	100.000	35.00	16.00	13.00	8.20	38.60	40.00	30.00	4.00	86.24/19337	95.00	3.26	B

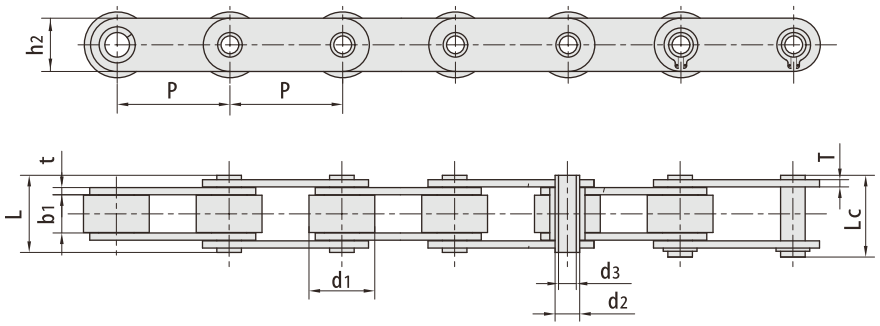

RBL chain number	Pitch	Roller diameter	Width between inner plates	Pin diameter		Pin length		inner plate depth	Plate thickness	Tensile strength	Average Tensile strength	Weight
	P mm	d1 max mm	b1 min mm	d2 max mm	d3 min mm	L max mm	Lc max mm	h2 max mm	t/T max mm	Q min kN/LBF	Qo kN	q kg/m
C12AHB	19.05	11.91	12.70	7.00	5.01	25.50	26.6	18.0	2.42	20.0/4545	22.40	1.58
C12BHP	19.05	12.07	11.68	6.50	4.00	21.60	22.8	15.9	1.85	20.0/4545	22.40	1.22
C2042HP	25.40	15.88	7.85	5.63	4.00	16.50	17.6	12.0	1.50	11.0/2500	12.60	0.78
C2042HHP	25.40	15.88	7.85	5.63	4.00	18.80	19.9	12.0	2.03	11.0/2500	13.20	0.95
C2052HP	31.75	19.05	9.53	7.22	5.12	20.50	21.8	15.0	2.03	20.4/4636	22.80	1.25
C2052HPF1	31.75	19.05	9.40	7.03	5.12	20.00	21.5	15.3	1.85	15.0/3409	17.30	1.21
C2052HPF3	31.75	19.05	9.53	7.02	5.13	20.10	21.6	15.09	2.03	19.6/4455	21.60	1.20
C2052HHP	31.75	19.05	9.53	7.22	5.12	22.10	23.4	15.0	2.42	20.4/4545	23.50	1.44
C2062HP	38.10	22.23	12.70	8.31	6.00	25.80	26.8	17.0	2.42	24.0/5455	27.10	1.72
C2062HHP	38.10	22.23	12.70	8.31	6.00	29.20	30.2	17.0	3.25	24.0/5455	27.60	1.99
C2062HHPF3	38.10	22.23	12.70	8.31	6.00	25.80	26.8	17.0	2.42	24.0/5455	27.10	1.72
C2082HP	50.80	28.58	15.75	11.40	8.05	32.40	33.8	24.0	3.25	50.0/11364	52.00	2.82
C2082HHP	50.80	28.58	15.75	11.40	8.05	35.70	37.0	24.0	4.00	50.0/11364	56.50	3.34
C1655HP	50.80	30.00	10.50	13.00	8.20	27.40	28.9	26.0	3.10	42.0/9545	48.20	2.72
63HPF1	63.00	40.00	15.00	16.00	12.10	35.00	36.2	28.5	4.00	50.0/11364	56.70	4.20
C2102HP	63.50	39.67	18.90	13.60	9.50	40.30	42.0	30.0	4.00	60.0/13636	72.00	5.13
DH4202HP	50.80	31.80	15.00	14.00	10.10	36.30	39.0	26.0	3.80	42.0/9545	51.60	3.75
DH4203HP	76.20	31.80	15.00	14.00	10.10	36.30	39.0	26.0	3.80	42.0/9545	47.10	3.01
DH8403HP	76.20	47.60	19.00	19.05	13.60	43.80	46.3	39.0	5.1/3.8	84.3/19159	130.30	6.81
DH42035HP	88.90	31.80	15.00	14.00	10.10	36.30	39.0	26.0	3.80	42.0/9545	51.10	2.79
DH4204HP	101.60	31.80	15.00	14.00	10.10	36.30	39.0	26.0	3.80	42.0/9545	51.60	2.63
DH8404HP	101.60	47.60	19.00	19.05	13.60	43.80	46.3	39.0	5.1/3.8	84.3/19159	130.30	5.78
DH8406HP	152.40	47.60	19.00	19.05	13.60	43.80	46.3	39.0	5.1/3.8	84.0/19091	130.30	5.18
HB25.4F2	25.40	15.89	17.26	9.00	6.35	31.30	32.5	20.0	2.50	20.0/4545	22.40	1.97
HB25.4F4	25.40	20.00	11.00	12.00	8.35	27.00	28.4	24.0	3.00	32.0/7273	35.80	2.48
HB38.1F2	38.10	25.40	12.70	9.50	6.60	26.60	28.0	19.1	2.30	20.0/4545	22.40	2.07
HB38.1F6R	38.10	25.40	15.20	14.00	10.20	34.50	36.5	27.0	3.70	45.0/10228	49.50	3.20
HB40F1	40.00	22.00	9.00	9.00	6.00	23.00	24.5	18.0	2.50	20.0/4546	22.00	1.58
HB41.4	41.40	25.40	15.00	13.80	10.50	35.50	37.0	32.0	4.00	45.0/10227	48.00	4.20

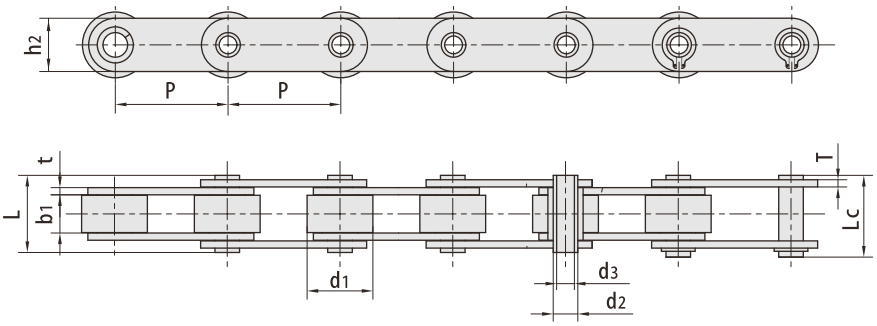

RBL chain number	Pitch	Roller diameter	Width between inner plates	Pin diameter		Pin length		inner plate depth	Plate thickness	Tensile strength	Average Tensile strength	Weight
	P mm	d1 max mm	b1 min mm	d2 max mm	d3 min mm	L max mm	Lc max mm	h2 max mm	t/T max mm	Q min kN/LBF	Qo kN	q kg/m
HB50	50.00	31.00	15.00	14.00	10.20	36.00	37.5	25.0	4.00	40.0/9091	43.20	3.98
HB50F9	50.00	18.00	11.50	8.20	6.00	27.40	28.4	25.0	3.00	15.0/3409	17.30	2.00
HB50F12	50.00	25.00	11.60	9.00	6.20	26.00	27.4	20.0	2.50	20.0/4545	22.40	1.77
HB50.42	50.42	37.30	15.00	14.00	10.20	36.00	37.5	26.2	4.00	40.0/9090	44.80	4.46
HB50.8F3	50.80	30.00	16.00	14.00	9.00	36.40	37.5	25.5	3.1	42.0/9545	47.00	3.20
HB50.8F8	50.80	32.00	20.00	19.10	12.40	44.60	46.4	40.0	5.00/4.00	100.0/22727	108.00	6.75
HB50.8F9	50.80	35.00	12.00	15.50	10.20	36.00	37.3	30.0	5.00	70.0/l5909	77.00	4.92
HB50.8F11	50.80	38.10	16.00	13.80	9.70	37.20	39.5	25.4	3.90	57.0/12814	62.70	5.01
HB50.8F12	50.80	28.58	16.00	14.00	9.00	36.40	37.5	25.5	3.50	42.0/9545	47.00	3.26
HB50.8F18	50.80	38.10	16.00	13.80	9.70	37.20	39.5	25.4	4.80/3.90	57.0/12814	62.70	4.85
HB50.8F20	50.80	38.10	15.20	14.28	9.50	36.60	37.2	26.4	4.00	40.0/8992	44.00	4.88
HB50.8F26	50.80	30.00	16.00	14.00	9.00	38.40	39.5	27.0	4.00	60.0/l3635	67.20	3.98
HB55F2	55.00	20.00	14.00	9.00	6.00	29.00	31.0	20.0	2.50	18.0/4180	19.20	1.54
HB57	57.00	30.00	10.00	13.00	10.20	26.40	27.5	26.0	3.00	28.0/6298	30.00	1.84
HB63F11	63.00	40.00	20.00	20.00	18.00	42.50	43.5	42.0	4.00	46.0/l0454	50.60	5.83
HB63F12	63.00	30.00	10.00	11.40	8.10	26.70	28.1	26.5	3.10	50.0/11364	56.50	2.39
HB63.5F1	63.50	32.00	15.00	16.00	12.20	32.00	33.0	25.0	3.00	20.4/4636	22.80	2.69
HB65	65.00	45.00	20.00	25.00	18.00	38.00	40.0	40.0	3.00	46.0/10454	50.60	4.49
HB65F1	65.00	40.00	20.00	14.00	10.05	40.40	42.0	35.0	4.00	50.0/11364	55.00	5.93
HB75	75.00	40.00	22.00	18.00	12.20	42.00	44.0	35.0	4.00	60.0/13636	72.00	5.57
HB76.2	76.20	31.75	15.50	12.70	9.50	35.50	37.0	26.0	4.00	42.0/9545	49.20	3.25
HB76.2F2	76.20	47.60	20.00	24.00	18.50	44.50	46.1	40.0	5.0 AO	79.0/17935	92.50	6.77
HB76.2F6	76.20	44.45	23.00	17.48	13.49	44.20	46.5	35.0	4.00	75.0/17044	82.50	6.27
HB76.2F9	76.20	47.60	17.50	22.00	16.60	46.00	47.6	38.0	6.00	56.0/12596	61.50	7.52
HB80	80.00	50.00	20.00	24.00	18.50	44.50	46.1	40.0	5.0 AO	79.0/17953	92.50	6.81
HB80F4	80.00	50.00	20.00	24.00	18.50	50.50	51.8	40.0	6.00	120.0/26977	132.00	8.10
HB86	86.00	45.00	15.00	19.00	14.50	40.00	41.5	35.0	5.00/4.00	85.0/19119	95.00	5.14
HB100F3	100.00	30.00	24.00	15.95	10.30	46.00	47.3	35.0	4.00	75.0/17046	84.70	4.04
HB100F6	100.00	60.00	31.00	27.00	19.00	59.00	60.8	50.0	6.00/5.00	150.0/34088	160.00	11.50

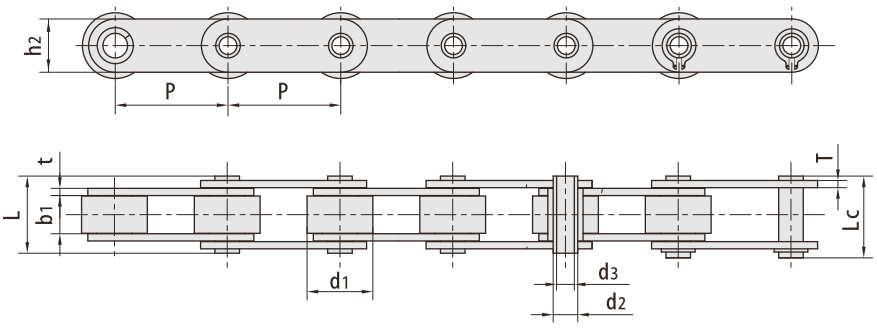

RBL chain number	Pitch	Roller diameter	Width between inner plates	Pin diameter		Pin length		inner plate depth	Plate thickness	Tensile strength	Average Tensile strength	Weight
	P mm	d1 max mm	b1 min mm	d2 max mm	d3 min mm	L max mm	Lc max mm	h2 max mm	t/T max mm	Q min kN/LBF	Qo kN	q kg/m
HB100F7	100.00	30.00	15.00	16.00	12.30	36.50	37.8	35.0	4.00	75.0/17046	84.70	3.49
HB100F9	100.00	45.00	32.80	18.00	12.40	49.00	49.0	35.0	5.00	75.0/17046	84.70	6.14
HB100F10	100.00	45.00	22.00	18.00	12.10	48.50	49.7	35.0	5.00	75.0/17046	84.70	6.05
HB100F11	100.00	40.00	20.60	16.00	12.50	42.10	43.4	35.0	4.00	75.0/17046	84.70	4.58
HB100F13	100.00	48.00	25.00	16.00	11.30	51.00	52.8	35.0	5.00	95.0/21356	104.50	7.03
HB100F14	100.00	37.70	22.20	18.00	12.40	45.30	46.3	35.0	4.15	64.0/14395	70.00	4.79
HB100F18	100.00	31.80	17.00	14.00	10.40	39.50	41.0	26.0	3.80	42.0/9545	47.00	2.82
HB100F19	100.00	40.00	22.00	18.00	12.20	44.70	45.9	35.0	4.00	75.0/16869	82.50	5.18
HB100F20	100.00	38.00	19.00	21.00	13.00	48.00	48.0	50.0	4.80	112.0/25192	123.20	6.60
HB125	125.00	70.00	37.00	26.00	16.20	73.50	75.0	60.0	7.00	250.0/56202	275.00	17.56
HB127F1	127.00	66.70	25.40	26.90	20.10	62.00	64.0	50.0	6.30	107.0/24067	118.00	11.30
HB150F1	150.00	60.00	22.00	24.00	18.00	49.50	51.5	45.0	5.00	100.0/22727	110.00	7.55
HB152F3	152.00	70.00	24.50	26.00	20.00	55.00	57.0	51.0	6.00	150.0/33721	165.00	11.60
HP40	40.00	22.00	8.75	9.00	6.00	23.00	24.2	18.0	2.50	27.0/4545	28.00	1.49
HP50	50.00	31.00	14.50	13.20	10.40	31.10	32.5	25.0	3.10	30.0/6818	34.20	3.29
HP50F4	50.00	31.00	15.00	13.20	10.20	36.50	38.0	25.0	4.00	40.0/9091	44.80	3.73
HP50.8	50.80	26.00	15.88	20.00	14.30	41.00	42.2	38.1	4.80	100.0/22727	108.00	5.32
HP76.2F7	76.20	38.00	17.00	15.00	9.53	43.50	44.6	30.0	5.00	90.0/20243	99.00	4.85
HP76.2F9	76.20	44.45	26.00	17.80	12.50	51.70	52.4	39.0	5.10/4.00	84.3/18961	92.50	7.64
HP100	100.00	45.00	22.00	16.00	12.00	46.00	47.5	35.0	5.00	75.0/17044	90.00	6.20
HP100F1	100.00	45.00	22.00	18.00	12.00	47.20	48.5	35.0	5.00	75.0/17044	90.00	6.15
HP101.6F1	101.60	47.60	19.00	19.00	13.20	46.20	48.0	40.0	5.00/4.00	53.0/12045	58.20	6.09
HP101.6F2	101.60	66.70	25.40	26.90	20.10	59.20	60.7	51.0	7.10/5.10	150.0/34088	160.00	14.23
HP101.6F6	101.60	47.60	20.50	21.00	16.11	45.00	46.5	40.0	5.00/4.00	60.0/13488	66.00	6.20
HP101.6F8	101.60	63.50	27.50	19.05	13.10	60.70	65.5	50.8	6.40	120.0/26977	132.00	13.12
HP130	130.00	40.00	21.00	18.10	12.10	41.30	42.5	35.0	3.80	80.0/18183	89.60	4.21
HP152	152.40	66.70	25.40	26.90	19.56	57.20	59.5	50.8	7.10/5.10	94.0/21362	107.80	9.90
HP152.4F1	152.40	47.60	19.00	19.00	13.20	46.20	48.0	40.0	5.00/4.00	54.0/12270	59.50	5.00
HP152.4F4	152.40	64.00	25.40	29.00	21.00	59.50	60.1	50.0	8.00/5.00	71.3/16028	78.43	9.82

Type A

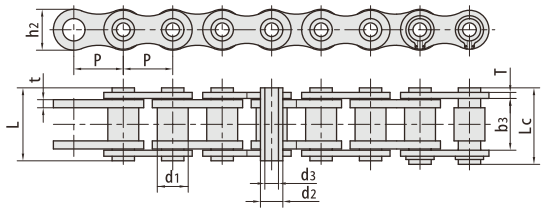

Type B

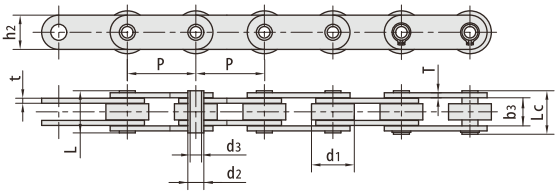

RBL chain number	Pitch	Roller diameter	Width between inner plates	Pin diameter		Pin length		inner plate depth	Plate thickness	Tensile strength	Average Tensile strength	Weight	Type
	P mm	d1 max mm	b1 min mm	d2 max mm	d3 min mm	L max mm	Lc max mm	h2 max mm	t/T max mm	Q min kN/LBF	Qo kN	q kg/m	
08BHPF2	12.700	8.51	13.20	6.65	5.20	18.00	19.2	11.8	1.6/1.3	10.0/2273	11.4	0.50	A
08BHPF3	12.700	8.51	13.40	6.65	4.00	19.00	20.2	11.8	1.70	14.0/3182	16.8	0.69	A
HB12.7	12.700	8.51	13.40	6.65	4.10	19.00	20.2	11.8	1.70	14.0/3182	16.8	0.69	A
08BHPF8	12.700	8.51	11.30	6.30	4.50	16.70	18.5	11.8	1.60	11.0/2500	12.1	0.80	A
40HPF1D3	12.700	8.51	11.60	6.35	4.36	20.60	20.6	12.0	1.50	11.0/2500	12.1	0.77	A
41HP	12.700	7.77	9.20	5.63	4.19	13.75	16.0	9.91	1.30	4.0/899	4.4	0.35	A
10BHPF1	15375	10.16	13.41	7.03	5.00	19.20	20.2	14.0	1.85	17.0/3864	20.6	0.83	A
10BHPF2	15375	10.16	10.40	7.03	5.00	17.00	18.0	14.0	1.85	15.0/3409	17.3	0.74	A
50HPF1	15375	10.16	13.60	7.03	5.13	20.70	21.9	14.4	2.03	18.0/4091	21.6	0.92	A
12BHPF1	19.050	12.07	16.00	8.03	5.40	22.70	23.9	15.8	1.85	25.0/5682	28.8	1.09	A
60HPF2	19.050	11.91	11.23	5.63	4.05	16.50	17.6	10.4	1.50	10.0/2273	10.8	0.62	A
C12BHPF9	19.050	12.07	15.80	8.03	5.00	22.40	23.9	16.1	1.85	25.0/5682	28.8	1.26	B
12BHPF9	19.050	12.07	15.80	8.03	5.00	22.40	23.9	16.1	1.85	25.0/5682	28.8	1.18	A
60HPF3	19.050	11.91	17.20	8.40	6.10	24.70	26.0	18.0	2.03	20.0/4546	24.0	1.54	A
16BHPF1	25.400	15.88	25.58	11.50	8.10	36.50	37.6	21.0	4.15/3.10	45.0/10227	52.2	2.21	A
HB38.1F7	38.100	22.20	17.50	11.00	8.30	25.00	26.6	18.0	2.50	20.0/4545	22.4	1.46	A
HB38.1F9	38.100	18.00	22.60	14.00	10.00	32.50	34.5	26.5	3.00	40.0/9090	44.0	2.40	B
HP38.1F10	38.100	17.95	23.50	13.60	10.44	36.00	37.3	28.4	3.70	70.0/15736	77.0	2.66	A
32BHP	50300	29.21	45.70	24.10	18.25	66.00	68.0	42.0	7.00/6.00	155.0/34864	170.0	7.40	A
63HP	63.000	40.00	23.50	16.00	12.00	35.30	38.3	28.6	4.00	65.0/14773	71.5	4.14	B
63HPF2	63.000	40.00	25.80	14.00	8.08	39.10	41.1	20.0	5.00	50.0/11364	65.7	4.17	B
63HPF4	63.000	40.00	23.50	16.00	12.20	34.70	37.7	28.6	4.00	44.0/10000	57.2	4.13	B
63HPF6	63.000	40.00	28.94	16.00	10.30	41.80	43.4	28.6	4.00	44.0/10000	57.2	5.18	B
63HPF11	63.000	40.00	23.50	16.00	12.20	34.70	37.7	28.6	4.00	65.0/147333	71.5	4.25	B
63HPF12	63.000	40.00	23.50	16.00	12.20	34.70	37.7	28.0	4.00	44.0/10000	57.2	4.02	B
HB63F17	63.000	40.00	23.40	18.00	12.20	37.00	38.0	25.0	4.00	40.0/9090	44.0	4.13	B
C2122HPF1	76.200	47.60	29.00	17.81	12.70	43.30	44.7	38.1	4.80	53.3/12123	59.2	7.05	B
HP101.6F6	101.600	47.60	30.50	21.00	16.11	45.00	46.5	40.0	5.00/4.00	60.0/13636	72.0	6.20	B
HP130	130.000	40.00	29.20	18.10	12.10	41.30	42.5	35.0	3.80	80.0/I7994	88.0	3.90	B
HP150F1	150.000	60.00	43.50	24.00	18.20	59.00	61.0	45.0	5.00	140.0/31490	154.0	8.52	B

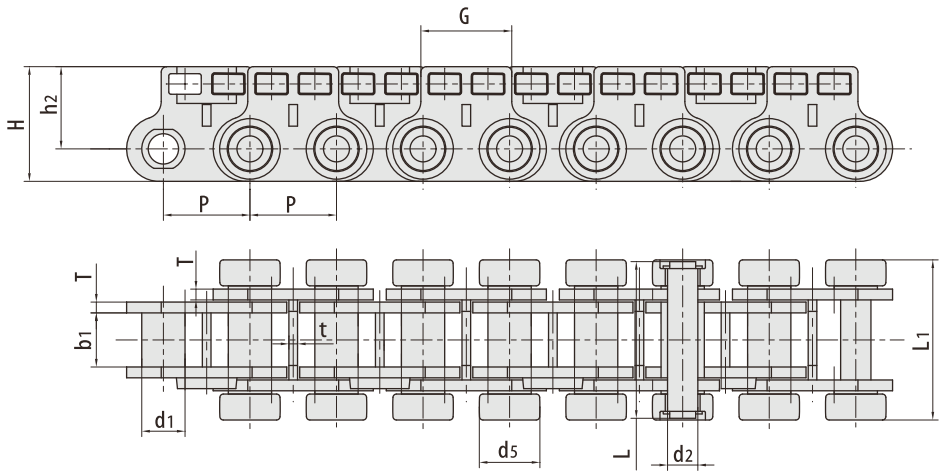

RBL chain number	Pitch P mm	Bush diameter d1 max mm	Width between inner plates b1 min mm	Pin diameter d2 max mm	Pin length L max mm	plate depth H max mm	Plate thickness T max mm	Tensile strength Q min mm	Weight q kg/m
P40	40.0	20.0	25.0	14.0	73.0	53.0	5.0	90.0/20250	10.67

RBL chain number	P mm	G mm	L1 mm	h2 mm	d5 mm	t mm
P40	40.0	42.0	75.0	38.0	28.0	4.0

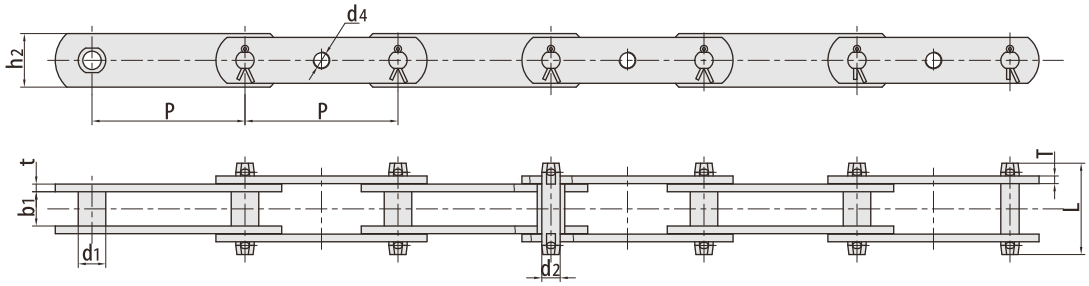

RBL chain number	Pitch P mm	Bush diameter d1 max mm	Width between inner plates b1 min mm	Pin diameter d2 max mm	Pin length L max mm	P late size h2 max mm	 d4 mm	 t/T mm	Tensile strength Q min mm	Weight q kg/m
P100F270GK	100.0	18.0	22.0	12.0	60.0	35.0	M 10	5.0	98.0/22030	4.60
P100F178	100.0	18.0	22.0	12.0	54.0	30.0	M 10	5.0	98.0/22030	4.00

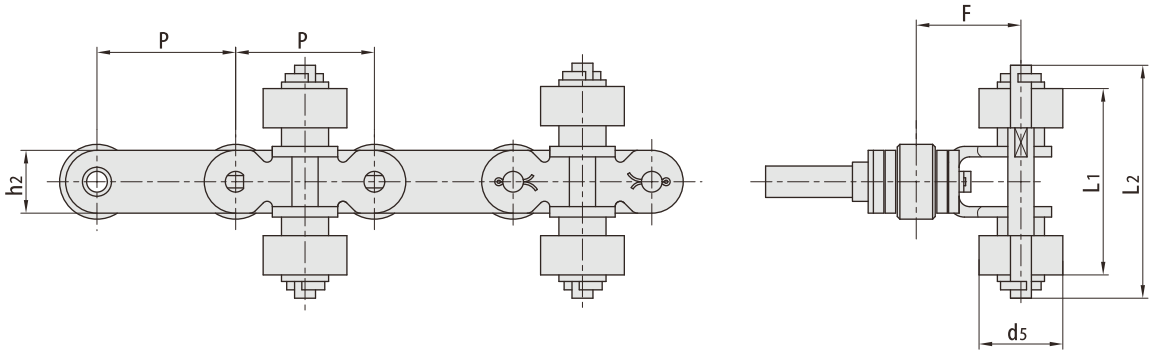

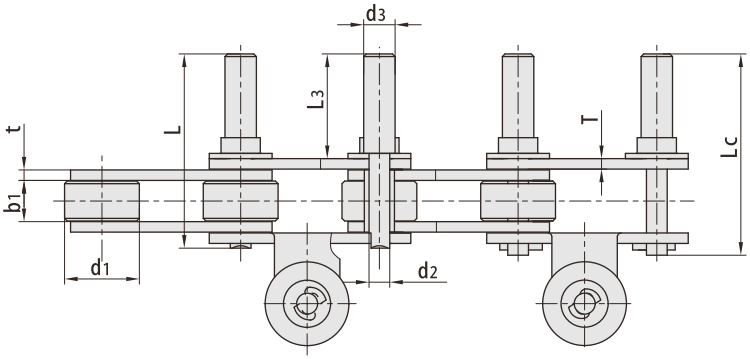

RBL chain number	Pitch	Roller diameter	Width between inner plates	Pin diameter		Pin length			Plate dimemsion		Attachment dimemsion				Tensile strength	Weight
	P	d1 max	b1 min	d2 max	d3 min	L3	L max	Lc max	h2 max	t/T max	F	d5	L1	L2	Q min	q
	mm	mm	mm	mm	mm	mm	mm	mm	mm	mm	mm	mm	mm	mm	mm	kg/m
P38.1F28	38.10	22.23	12.70	7.92	10.0	64.5	101.0	-	20.0	4.0	30.7	30.0	76.5	87.2	50.00/11240	4.06
P42.5F2	42.50	25.40	25.22	12.70	12.0	69.0	121.4	126.0	41.0	5.6	45.2	32.0	93.0	109.0	169.00/37991	14.25
P53F2	53.00	28.58	15.75	7.92	12.0	60.0	94.5	98.0	24.0	4.0	40.0	32.0	74.0	89.0	62.36/14018	7.60

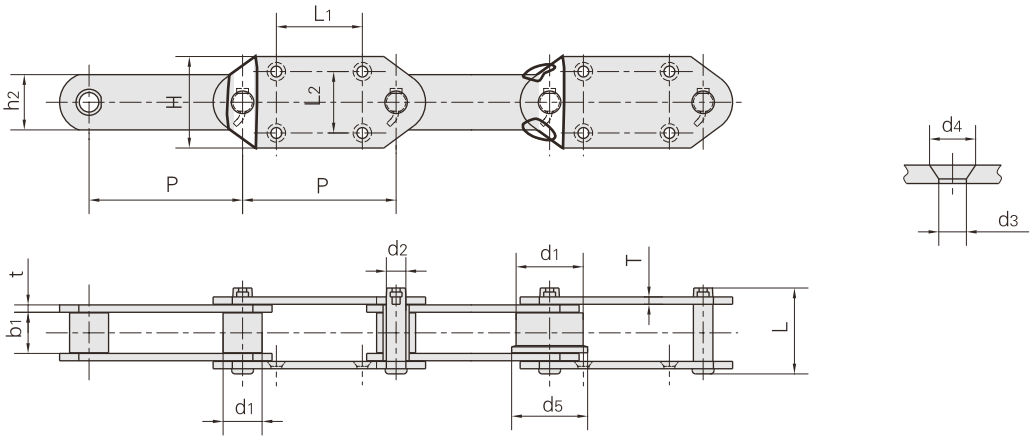

RBL chain number	Pitch P mm	Roller diameter b1 min mm	Width between inner plates b1 min mm	Pin diameter d2 max mm	Pin length L max mm	plate depth H max mm	Plate thickness T max mm	Plate thickness t/T max mm	Tensile strength Q min mm	Average Tensile strength Qo kN	Weight q kg/m
P95	95.0	50.8	58.0	30.0	13.50	70.0	38.0	6.0	75.0/16871	82.5	9.93
P100F225G4	100.0	40.0	-	22.0	11.30	53.5	32.0	4.5	69.0/15511	75.9	5.00
P100F269G4	100.0	48.5	-	57.6	25.40	120.0	75.0	10.0	550.0/123640	605.0	31.10
P125F61G4	125.0	63.5	-	67.4	32.00	141.0	90.0	12.0	750.0/168600	825.0	47.00
P125F62G4	125.0	70.0	-	75.0	36.00	168.0	100.0	16.0	1000.0/224800	1100.0	68.60
P150F142G4	150.0	78.0	-	80.0	39.00	172.0	120.0	16.0	1350.0/303480	1485.0	78.90
RF10150RFI	150.0	50.0	60.0	30.0	14.50	69.0	38.1	8.0/6.3	200.0/44992	220.0	8.64
P150F47	150.0	54.0	-	40.0	27.00	112.0	68.5	12.0	600.0/67487	680.0	25.70
RF10150RF1G4	150.0	29.0	-	30.0	14.50	69.0	38.1	6.3	200.0/44960	220.0	16.70
P152F41	152.4	38.1	-	36.0	15.50	90.0	50.0	8.0	150.0/33743	165.0	11.91
P152F236G4	152.4	36.0	-	36.5	18.00	87.0	50.0	8.0	280.0/62944	308.0	12.10
RF17200MF1G4	200.0	44.5	-	51.4	19.10	120.0	60.0	10.0	245.0/55114	269.5	17.60
RF17200MF2G4	200.0	44.5	-	51.4	19.10	109.5	50.8	9.5	213.0/47916	243.0	15.10
P200F128G4	200.0	50.8	-	56.6	24.00	120.0	70.0	9.5	450.0/101164	490.0	19.40
P200F130G4	200.0	44.5	-	51.8	19.10	113.0	60.0	10.0	321.0/72164	353.1	17.80
P250F6	250.0	63.5	-	67.0	31.80	146.0	90.0	12.0	900.0/101230	495.0	31.70
P250F66	250.0	80.0	-	51.4	19.10	109.5	50.8	9.5	329.0/73962	378.0	19.79
P250F71SS	250.0	100.0	125.0	79.0	22.00	120.0	64.0	10.0	320.0/71939	368.0	29.80
P250F87G4	250.0	80.0	-	51.4	22.00	109.0	50.8	9.5	329.0/73959	361.9	19.60
P250F110G4	250.0	80.0	105.0	51.5	19.10	110.0	50.0	9.0	356.4/80119	392.0	18.30
P250F163	250.0	70.0	-	76.0	35.00	165.0	100.0	16.0	1100.0/247280	1210.0	44.10
P300F1	300.0	70.0	-	75.0	35.00	174.0	100.0	16.0	1065.0/239580	1118.0	47.47
P350F2G4	350.0	85.0	-	85.0	41.75	189.5	115.0	16.0	1200.0/269772	1372.0	48.43

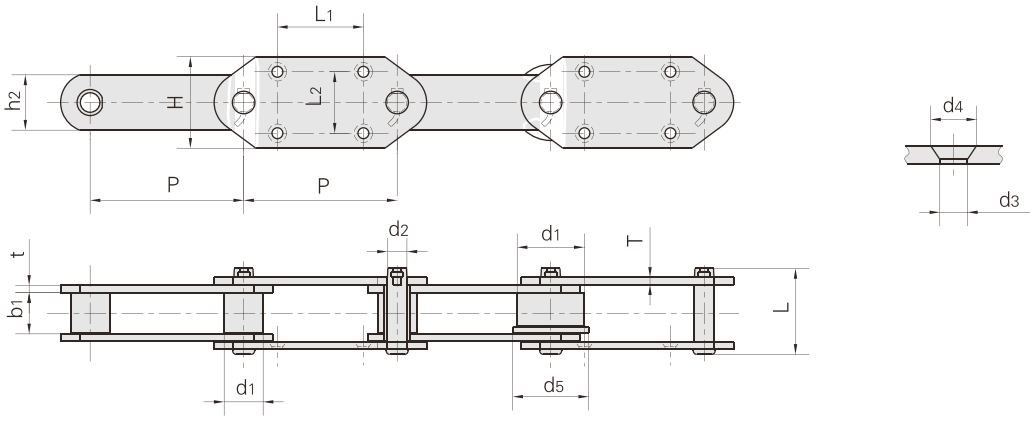

RBL chain number	P mm	H mm	L1 mm	L2 mm	d3 mm	d4 mm
P95	95.0	95.0	50.0	70.0	12.0	21.0
P100F225G4	100.0	80.0	50.0	50.0	10.0	15.0
P100F269G4	100.0	75.0	100.0	106.0	18.0	30.0
P125F61G4	125.0	180.0	125.0	130.0	18.0	33.0
P125F62G4	125.0	180.0	125.0	130.0	18.0	33.0
RF10150RFI	150.0	100.0	75.0	70.0	11.0	20.0
P150F47	150.0	110.0	75.0	75.0	12.0	22.0
P150F142G4	150.0	120.0	150.0	170.0	22.0	38.0
RF10150RF1G4	150.0	110.0	75.0	70.0	11.0	20.0
P152F41	152.4	110.0	75.0	70.0	14.5	25.0
P152F236G4	152.4	110.0	75.0	70.0	14.0	27.0
RF17200MF1G4	200.0	125.0	100.0	80.0	18.0	33.0
RF17200MF2G4	200.0	120.0	100.0	80.0	15.0	26.0
P200F128G4	200.0	130.0	100.0	80.0	18.0	31.0
P200F130G4	200.0	125.0	100.0	80.0	18.0	30.0
P250F6	250.0	150.0	140.0	100.0	17.7	30.0
P250F66	250.0	150.0	140.0	100.0	15.0	26.0
P250F71SS	250.0	150.0	110.0	100.0	18.0	-
P250F87G4	250.0	150.0	140.0	100.0	15.0	26.0
P250F110G4	250.0	125.0	150.0	80.0	14.0	27.0
P250F163	250.0	151.0	140.0	100.0	18.0	30.0
P300F1	300.0	180.0	170.0	120.0	22.0	39.0
P350F2G4	350.0	210.0	225.0	140.0	26.0	42.2

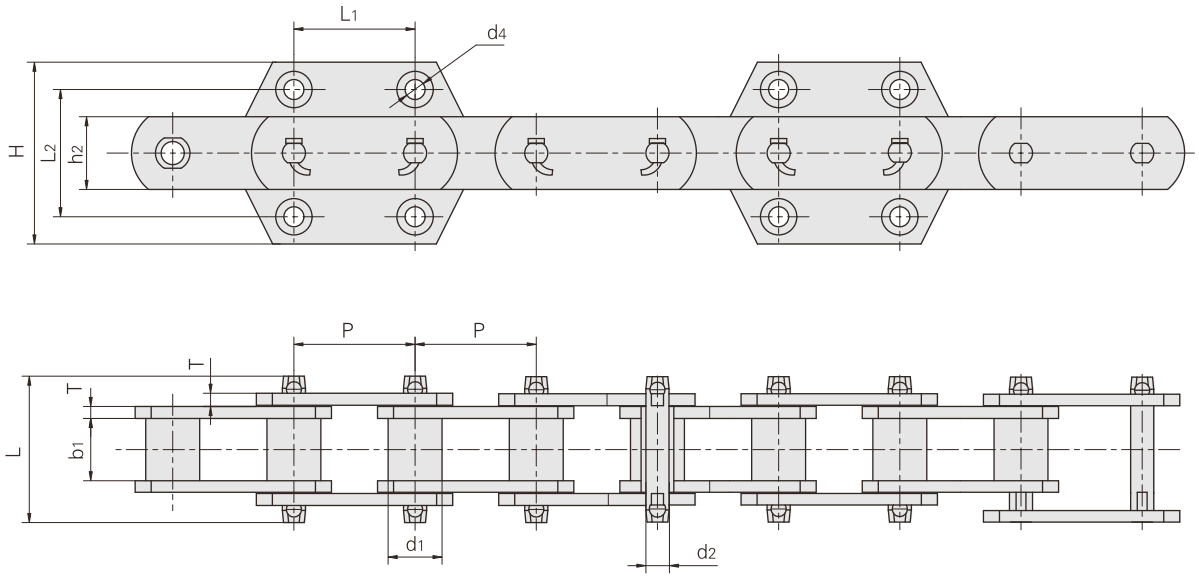

Elevator type	RBL chain number	Pitch P mm	Roller diameter d1 mm	Width between inner plates b1 mm	Pin diameter d2 mm	Pin length L mm	plate depth h2 mm	Plate thickness T mm	Attachment dimemsion H mm	L1 mm	L2 mm	d4 mm	Tensile strength Q min mm
	P100F112.04	100.0	44.5	52.0	19.30	120.0	60.0	10.0	150	100	105	18.5	350.0/78735
	P100F107.04	100.0	50.8	58.0	25.40	120.0	75.0	10.0	150	100	105	18.5	550.0/123726
NE15	P101.6F92	101.6	26.5	27.0	11.50	70.0	35.0	6.0	-	40	90	12.0	100.0/22495
NE30	P152F119	152.4	36.0	36.5	15.50	90.0	50.0	8.0	-	60	120	14.0	240.0/53990
NE50	P152F120	152.4	36.0	36.5	15.50	90.0	50.0	8.0	110	75	70	14.0	240.0/53990
	P152F126	152.4	34.9	37.1	15.80	88.0	44.5	7.9	110	75	70	15.0	186.2/41887
NE100	P200F64	200.0	44.5	51.8	19.10	120.0	60.0	10.0	125	100	80	18.0	380.0/85484
NE150	P200F65 P200F63	200.0 200.0	48.5 48.5	57.6 57.6	22.20 22.20	120.0 125.0	75.0 75.0	10.0 10.0	125 125	100 100	80 80	18.0 18.5	550.0/123727 315.0/70861
NE200	P250F42	250.0	63.5	67.4	31.75	143.0	90.0	12.0	150	140	100	18.0	750.0/168718
NE300	P250F43	250.0	63.5	67.4	31.75	146.0	90.0	12.0	150	140	100	18.0	750.0/168718
NE400	P300F9	300.0	70.0	75.0	35.00	170.0	100.0	16.0	180	170	125	22.0	1065.0/239580

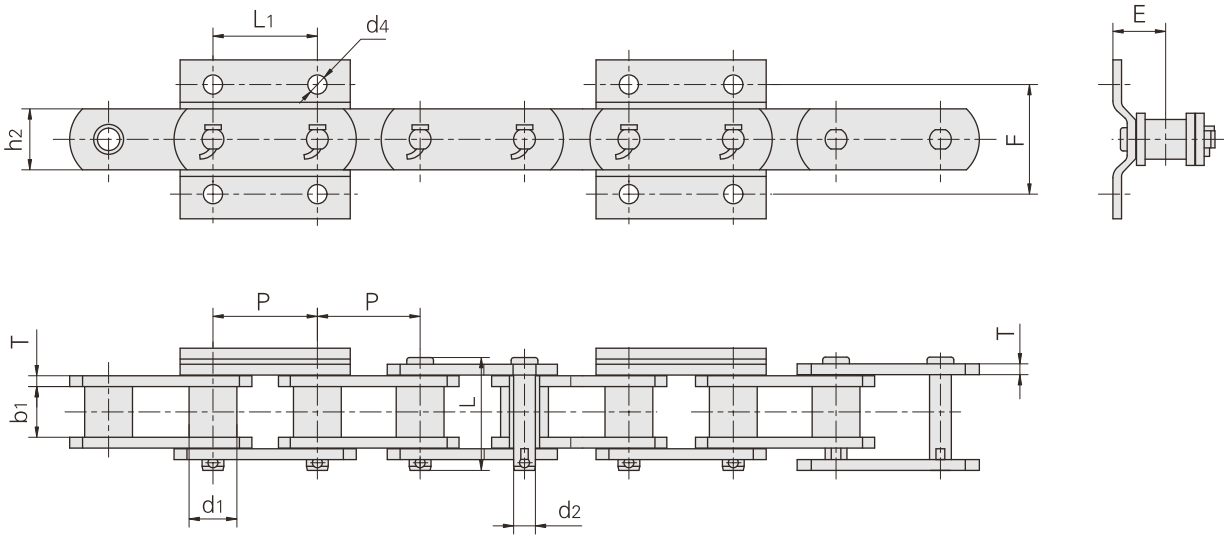

RBL chain number	Pitch	Roller diameter	Width between inner plates	Pin diameter	Pin length	plate depth	Plate thickness	Attachment dimemsion				Tensile strength
	P mm	d1 mm	b1 mm	d2 mm	L mm	h2 mm	T mm	F mm	L1 mm	d4 mm	E mm	Q min mm
P75F18	75.0	29.0	30.0	14.5	69.0	38.1	6.3	80.0	75.0	14.0	38.5	204.9/46094
P75F22	75.0	32.0	37.1	15.9	86.5	44.5	7.9	75.0	75.0	14.0	46.5	253.6/57049
P75F24	75.0	29.0	30.0	14.5	69.0	38.1	6.3	80.0	75.0	14.0	38.5	204.9/46093
P75F41G4	75.0	29.0	29.4	14.5	69.0	38.1	6.3	80.0	75.0	14.0	68.5	205.0/46084
P75F48G4	75.0	29.0	30.0	14.5	69.0	38.1	6.3	80.0	75.0	14.0	38.5	205.0/46084
P75F59G4	75.0	29.0	30.0	14.5	69.0	38.1	6.3	80.0	75.0	14.0	38.5	205.0/46084
M224F36S75	75.0	42.0	47.0	21.0	97.0	56.0	8.0	100.0	75.0	18.0	55.0	224.0/50909
P76.2F31	76.2	34.9	37.1	17.0	86.5	44.5	7.9	80.0	75.0	14.0	46.5	253.6/57009
P76.2F51G4	76.2	35.0	37.0	18.0	86.5	50.0	8.0	80.0	75.0	14.0	43.5	290.0/65192
P76.2F55G4	76.2	34.9	37.1	15.9	84.6	44.5	7.9	80.0	75.0	14.0	46.5	253.6/57009
P76.2F81G4	76.2	35.0	37.0	18.0	94.0	45.0	10.0	80.0	75.0	14.0	46.0	342.0/76882
P100F97	100.0	40.1	51.4	19.1	109.5	50.8	9.5	100.0	100.0	16.0	58.0	351.0/78960
P100F127G4	100.0	50.0	57.5	24.0	117.0	63.5	9.5	100.0	100.0	16.0	62.5	470.0/105730
P100F371G4	100.0	40.0	51.5	20.0	111.5	55.0	10.0	100.0	100.0	16.0	55.0	420.0/94416
P125F41	125.0	57.0	67.0	28.0	147.0	76.0	12.5	110.0	125.0	18.0	77.0	690.0/155112
P125F47G4	125.0	60.0	67.0	36.0	142.0	90.0	12.0	110.0	125.0	19.0	70.6	613.0/137802
P150F97G4	150.0	35.0	37.0	18.0	86.5	50.0	8.0	80.0	75.0	14.0	43.0	280.0/62944

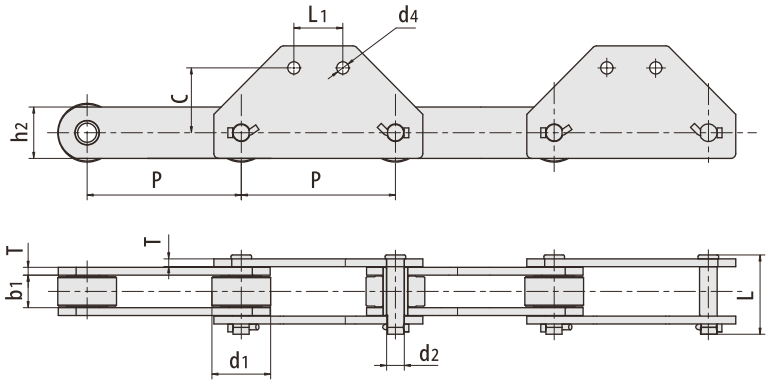

RBL chain number	Pitch	Roller diameter	Width between inner plates	Pin diameter	Pin length	plate depth	Plate thickness	Attachment dimemsion			Tensile strength
	P mm	d1 max mm	b1 min mm	d2 mm	L mm	h2 mm	T mm	L1 mm	C mm	d4 mm	Q min mm
P315F12	315.0	120.0	66.5	36.0	162.0	105.0	16.0	100.0	133.0	25.0	1000/224958
P500F4	500.0	150.0	120.0	50.0	227.0	130.0	20.0	400.0	120.0	26.0	2650/596138

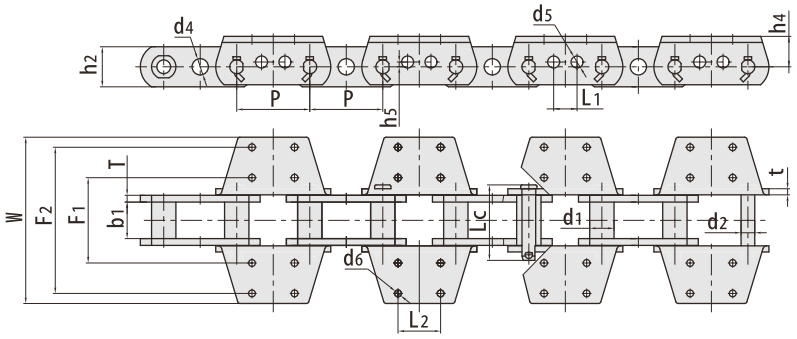

RBL chain number	Pitch	Bush diameter	Width between inner plates	Pin diameter	Pin length	Inner plate depth	Plate thickness	Tensile strength	Average Tensile strength	Weight
	P mm	d1 max mm	b1 min mm	d2 max mm	Lc max mm	h2 max mm	t/T mm	Q min kN/LBF	Qo kN	q kg/m
P152F172	152.4	50.8	76.2	28.6	157.5	83.60	14.2/12.7	431.0/96889	474.1	47.7
P152F193K2	152.4	44.5	76.2	25.4	152.0	76.2	12.7/12.7	431.0/96889	474.1	35.3
P152F201K4	152.4	44.5	76.2	25.4	152.0	82.55	12.7/12.7	431.0/96889	474.1	44.5

RBL chain number	P mm	h4 mm	h5 mm	F1 mm	F2 mm	W mm	L1 mm	L2 mm	d4 mm	d5 mm	d6 mm
P152F172	152.4	63.50	10.0	178.0	305.0	347.0	48.8	88.9	25.0	25.0	14.2
P152F193K2	152.4	47.75	10.0	184.0	-	241.0	48.8	63.5	34.0	25.0	17.5
P152F201K4	152.4	63.50	-	177.8	304.8	355.6	-	88.9	-	-	14.3

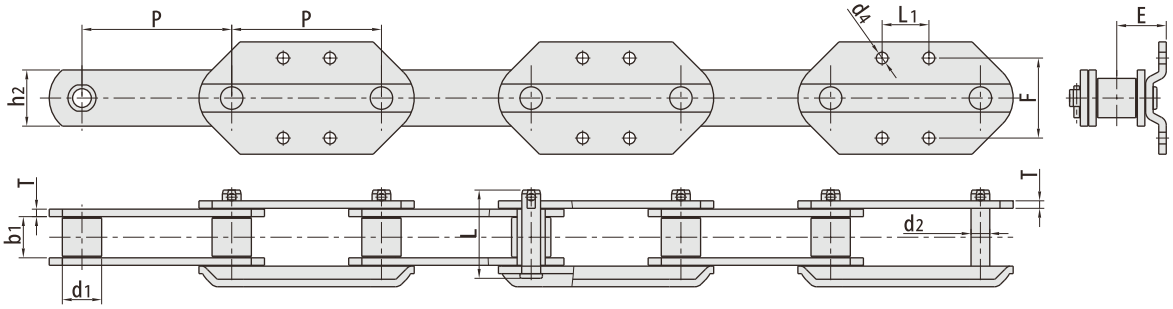

RBL chain number	Pitch	Roller diameter	Width between inner plates	Pin diameter	Pin length	plate depth	Plate thickness	Attachment dimemsion				Tensile strength
	P mm	d1 max mm	b1 min mm	d2 mm	L mm	h2 mm	T mm	F mm	L1 mm	d4 mm	E	Q min mm
P160F61G4	160.0	42.0	44.0	20.0	94.3	60.00	8.0	85.5	50.0	12.5	53.0	250.0/56202
P200F95G4	200.0	34.9	37.1	15.9	86.4	44.45	7.9	100.0	100.0	15.0	45.0	280.0/62947
P200F153G4	200.0	34.9	37.1	15.9	86.4	44.45	7.9	100.0	100.0	15.0	45.0	280.0/62947
RF17200S-G4	200.0	40.1	51.4	19.1	109.5	50.80	9.5	100.0	100.0	15.0	65.0	360.0/80931

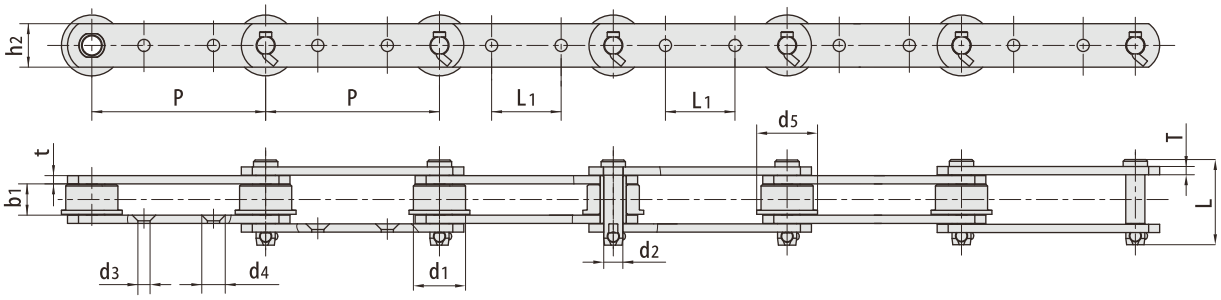

RBL chain number	Pitch	Roller diameter		Width between inner plates	Pin diameter	Pin length	plate depth	Plate thickness	Attachment dimemsion			Tensile strength	Weight
	P mm	d1 max mm	d5 max mm	b1 min mm	d2 mm	L max mm	h2 max mm	t/T max mm	L1 max mm	d3 max mm	d4 max mm	Q min mm	q kg/m
P75F39G2	75.0	31.8	-	16.0	8.0	41.0	22.0	3.2	30.0	8.0	13.5	30/6744	2.80
P200F70	200.0	60.0	70.0	35.0	22.0	98.0	50.0	9.5	80.0	14.0	27.0	320/71940	13.52

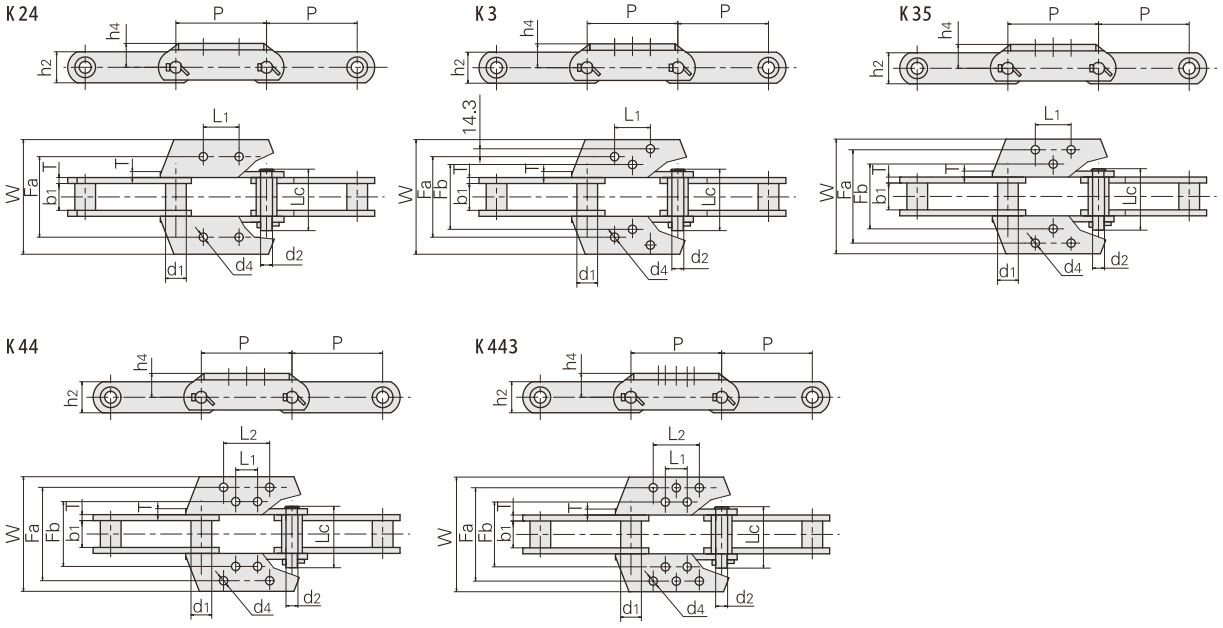

RBL chain number	Pitch P mm	Bush diameter d1 max mm	Width between inner plates b1 min mm	Pin diameter d2 max mm	Pin length L max mm	plate depth h2 max mm	Plate thickness t/T mm	Tensile strength Q min kN/LBF	Average Tensile strength Qo kN	Weight q kg/m
856	152.4	44.5	76.2	25.40	155.5	63.5	12.7	539/121252	592.9	24.5
857	152.4	44.5	76.2	25.40	155.5	82.6	12.7	775A 74342	852.5	30.0
859	152.4	60.3	95.3	31.75	190.0	101.6	16.0	1180465450	1298.0	51.0
864	177.8	60.3	95.3	31.75	190.0	101.6	16.0	1230476698	1353.0	51.0
S859F1K4	152.4	60.4	95.3	31.75	189.5	101.6	16.0	690.0/155112	759.0	73.8
5984F3K443	177.8	63.5	95.3	35.00	204.0	101.6	16.0	689.4/154977	758.3	74.0
S864F3K443	177.8	60.4	95.3	31.75	189.5	101.6	16.0	1045.0434916	1149.5	69.8

RBL chain number	Attachment type	Attachment dimension									Weight
		P mm	h4 mm	Fb mm	Fa mm	W mm	L1 mm	L2 mm	T mm	d4 mm	q kg/m
856	K24	152.4	47.6	-	184.2	241	63.5	-	12.7	18.0	1.5
856	K3	152.4	47.6	166.7	277.8	344	70.0	-	12.7	15.0	2.8
856	K35	152.4	47.6	184.2	298.5	344	63.5	-	12.7	18.0	2.8
859	K44	152.4	76.2	228.6	330.2	381	70.0	114.5	16.0	17.5	5.0
864	K443	177.8	76.2	228.6	330.2	381	95.3	140.0	16.0	17.5	7.5
S859F1K4	K44	152.4	76.2	228.6	330.2	381	69.9	114.3	16.0	17.5	5.5
S984F3K443	K443	177.8	76.2	228.6	330.2	378	95.3	139.7	16.0	17.5	6.4
S864F3K443	K443	177.8	76.2	228.6	330.2	381	95.3	139.7	16.0	17.5	6.2

Direction of travel

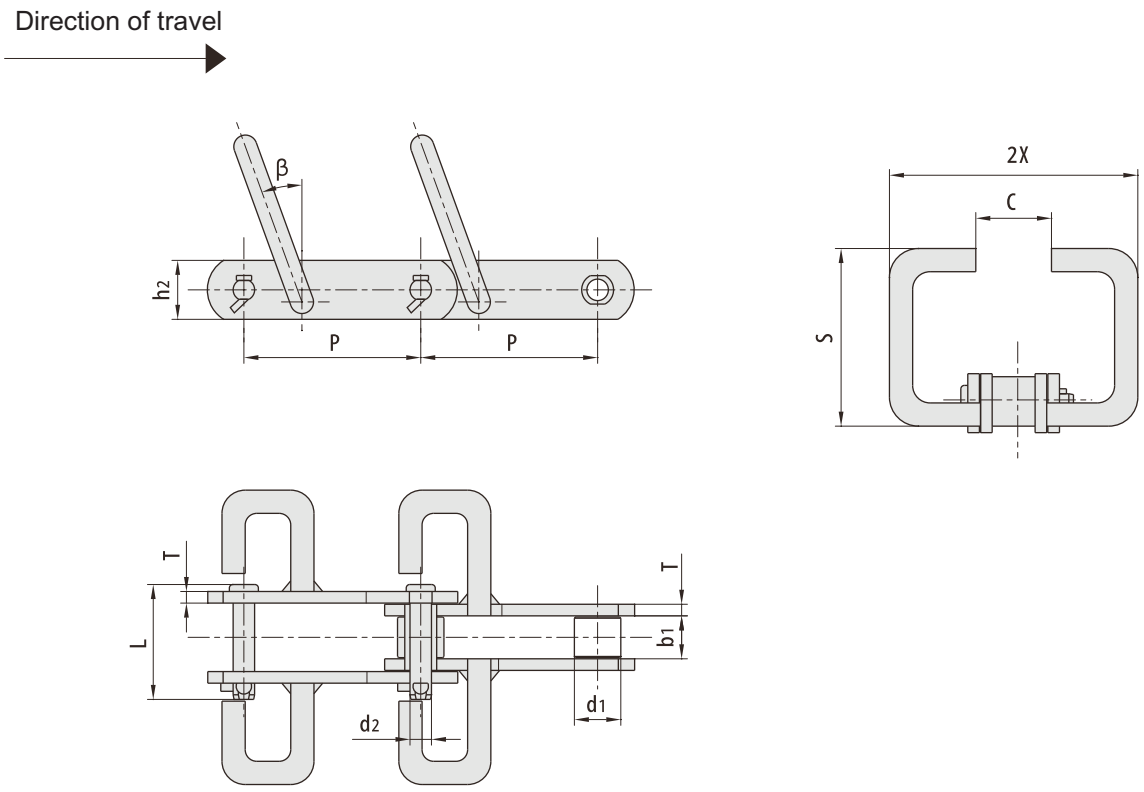

RBL chain number	Pitch	Roller diameter	Width between inner plates	Pin diameter	Pin length	inner plate depth	Plate thickness	Attachment dimemsion				Tensile strength	Weight
	P mm	d1 max mm	b1 mm	d2 mm	L mm	h2 mm	T mm	S mm	2X mm	C mm	B	Q kN/LBF	q kg/m
P152F51	152.4	40.0	36.0	18.5	95.5	50.8	10.0	175.0	310.0	110.0	20°	170/38242	24.9
P152F221	152.4	63.0	36.5	15.5	86.0	20.0	8.0	91.0	240.0	-	0°	200.044960	13.5
P152F222	152.4	36.0	36.5	15.5	86.0	50.0	8.0	71.0	175.0	-	0°	200.044960	12.4
P152F232	152.4	36.0	36.5	15.5	86.0	50.0	8.0	100.0	256.0	-	0°	240.0/53952	14.2

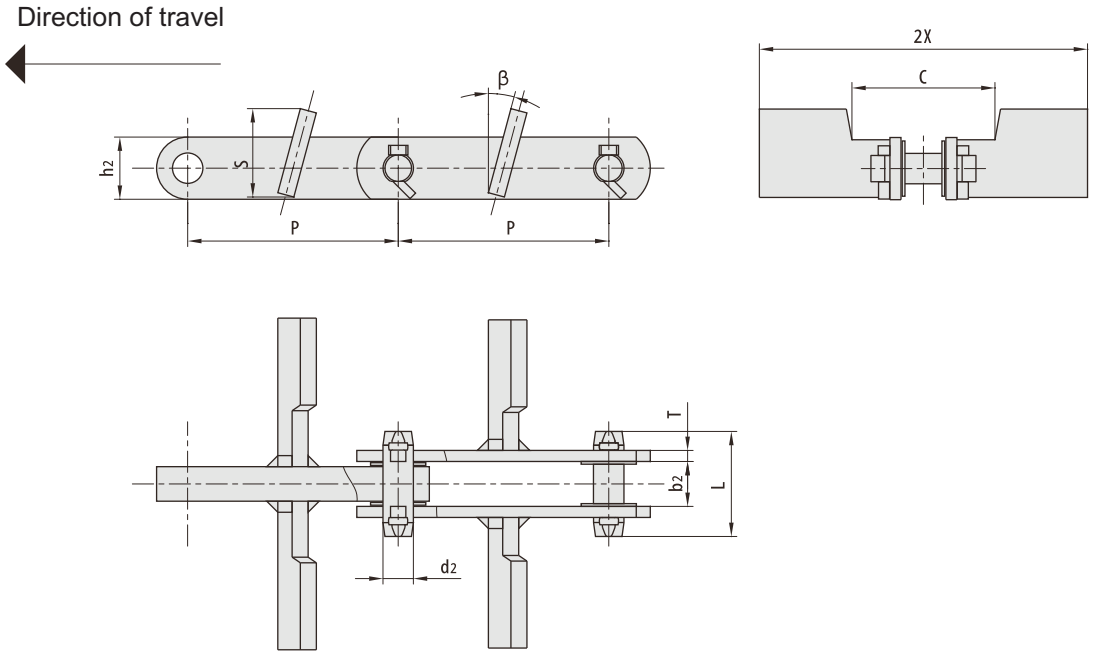

RBL chain number	Pitch P mm	Width between inner plates b2 mm	Pin diameter d2 mm	Pin length L mm	inner plate depth h2 mm	Plate thickness T mm	Attachment dimemsion S mm	2X mm	C mm	B	Tensile strength Q kN/LBF	Weight kg/m
P150F17A	150.0	25.0	18.5	67.3	38.1	10.0	115.0	180	112	15°	15053743	14.50
P152F45	152.4	32.5	22.0	76.0	45.0	8.0	64.0	326	104	15°	260/58489	20.40
P152F45A	152.4	32.5	22.0	76.0	45.0	8.0	83.0	286	106	15°	26058489	20.80
P152F45B	152.4	32.5	22.0	76.0	45.0	8.0	64.0	276	106	15°	26058489	18.00
P152F45C	152.4	32.5	22.0	76.0	45.0	8.0	64.0	220	106	15°	26058489	16.50
P152F47	152.4	34.0	22.0	85.0	45.0	12.0	81.0	400	106	15°	40059983	30.90
P152F194	152.4	32.5	22.0	80.0	45.0	10.0	65.5	270	105	15°	240.050355	15.91
PR152F2	152.4	36.5	15.9	87.0	45.0	8.0	60.0	180	120	15°	253.657009	13.20
P152F226	152.4	32.5	22.0	80.0	42.0	10.0	76.8	270	79	15°	260.058448	20.10
P200F29	200.0	40.5	35.0	104.0	80.0	13.0	148.0	420	112	15°	530/119227	50.60
P200F29A	200.0	40.5	35.0	104.0	80.0	13.0	148.0	430	112	15°	530/119227	53.90
P200F35	200.0	33.0	26.5	77.0	50.0	10.0	145.5	430	210	15°	40059983	28.93

Direction of travel

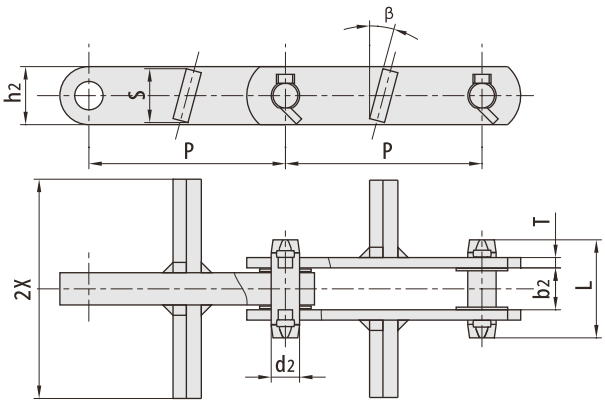

RBL chain number	Pitch P mm	Width between inner plates b2 mm	Pin diameter d2 mm	Pin length L mm	inner plate depth h2 mm	Plate thickness T mm	Attachment dimemsion S mm	2X mm	B	Tensile strength Q kN/LBF	Weight kg/m
P101.6F20	101.6	16.5	17.46	53.7	38.0	6.0	34.0	210.0	45°	100/22496	7.26
P150F17C	150.0	25.0	18.50	67.3	38.1	10.0	36.0	168.0	15°	150/33743	10.60
P152F2	152.4	33.3	22.00	76.0	45.0	8.0	38.0	180.0	20°	260/58489	12.10
P152F45D	152.4	32.5	22.00	76.0	45.0	8.0	42.0	170.0	15°	260/58489	13.50
P152F45E	152.4	32.5	22.00	76.0	45.0	8.0	42.0	280.0	15°	260/58489	16.20
P152F45F	152.4	32.5	22.00	76.0	45.0	8.0	42.0	227.0	15°	260/58489	14.90
P152F46	152.4	40.8	25.00	86.0	50.0	9.0	49.0	290.0	15°	300/67487	20.80

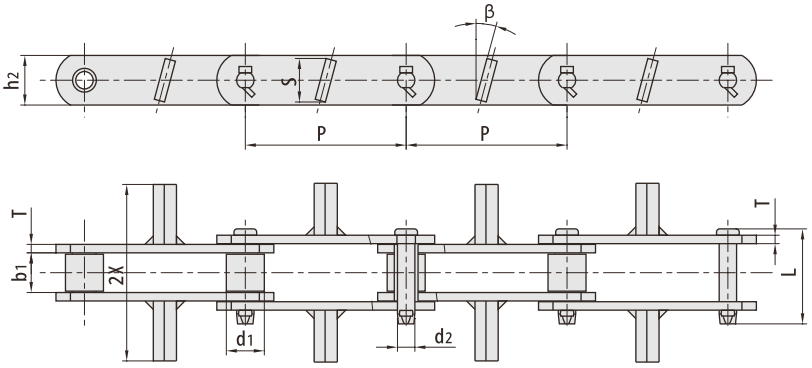

RBL chain number	Pitch P mm	Width between inner plates b1 mm	Roller diameter d1 mm	Pin diameter d2 mm	Pin length L mm	plate depth h2 mm	Plate thickness T mm	Attachment dimemsion S mm	2X mm	B	Tensile strength Q kN/LBF	Weight q kg/m
P152F48	152.4	37.6	36.0	16.5	90.0	47.0	8.0	42.0	170.0	15°	180/40492	12.1
R06205MF3	152.4	37.0	38.1	15.9	88.0	45.0	8.0	42.0	170.0	15°	170/38242	12.4

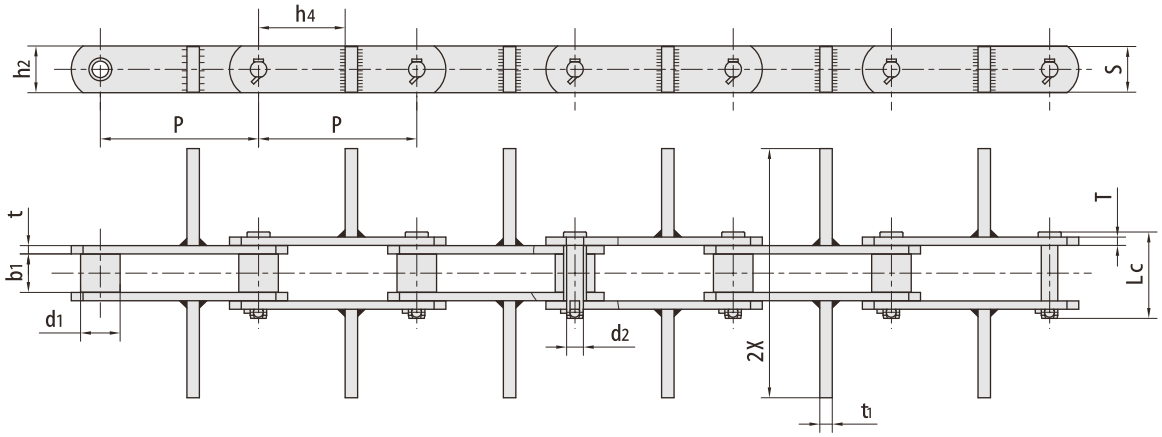

RBL chain number	Pitch	Width between inner plates	Roller diameter	Pin diameter	Pin length	plate depth	Plate thickness	Attachment dimemsion				Tensile strength	Weight
	P	b1 min	d1	d2 max	L max	h2 max	t/T	h4	S	2X	t1	Q min	q
	mm	mm	mm	mm	mm	mm	mm	mm	mm	mm	mm	mm	kg/m
RF6205MF13	152.4	37.1	38.1	15.9	83.5	45.0	8.0	57.0	44.0	240.0	12.0	237.0/53278	14.54

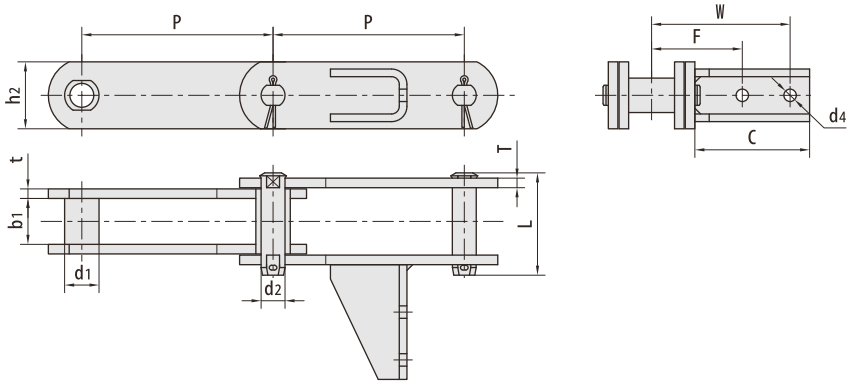

RBL chain number	Pitch	Width between inner plates	Roller diameter	Pin diameter	Pin length	plate depth	Plate thickness	Attachment dimemsion				Tensile strength	Weight
	P	b1 min	d1 max	d2 max	L max	h2	t/T	C	F	W	d1	Q min	q
	mm	mm	mm	mm	mm	mm	mm	mm	mm	mm	mm	mm	kg/m
M315F51B200	200.0	48.0	36.0	25.0	107.0	70.0	10.0	120.0	95.0	145.0	13.0	450/102273	21.94

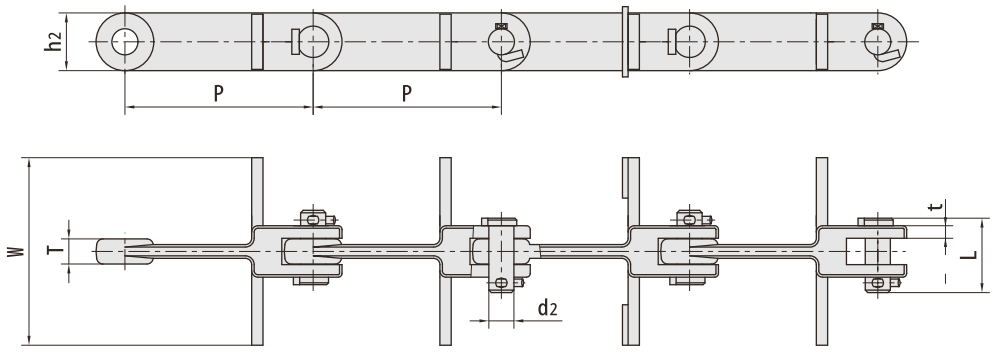

RBL chain number	Pitch P mm	Pin diameter d2 max mm	plate depth h2 mm	Pin length L mm	Plate thickness t/T mm	Attachment dimemsion W mm	Tensile strength Q mm	Weight q kg/m
MCL267150T	150.0	20.0	46.0	59.3	20/10	220.0	267/60000	11.4

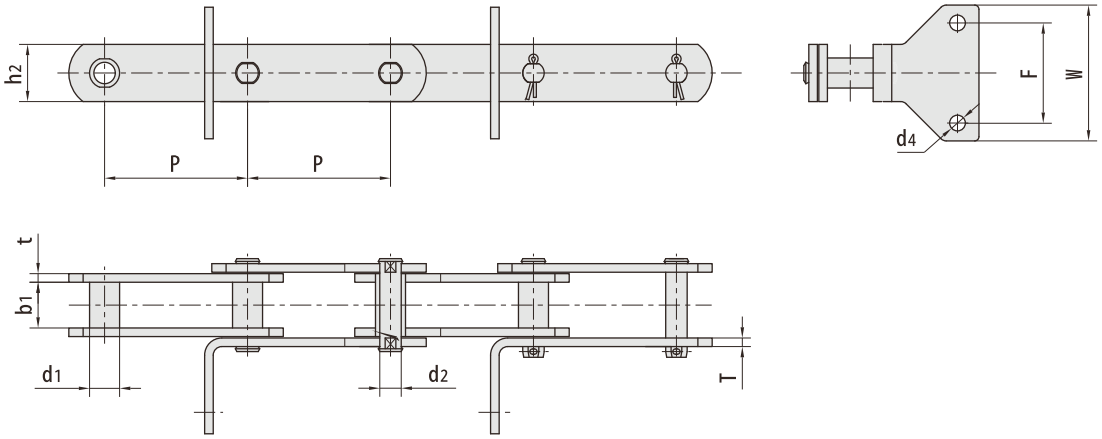

RBL chain number	Pitch P mm	Width between inner plates b1 mm	Bush diameter d1 mm	Pin diameter d2 mm	plate depth h2 mm	Plate thickness T mm	Attachment dimemsion F mm	 W mm	 d1 mm	Tensile strength Q mm	Weight q kg/m
MR112F21B100	100.0	32.0	21.0	15.0	40.0	6.0	70.0	90.0	11.0	95.2/21413	7.45

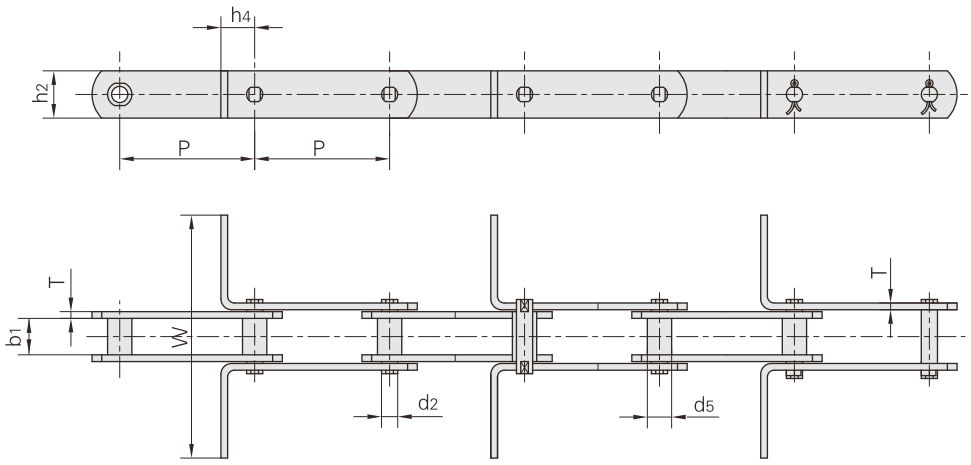

RBL chain number	P mm			b1 min mm	d2 max mm	d5 max mm	h4 mm	h2 max mm	T max mm	W mm	Q min mm
MR56	100	125	-	24.0	10.0	15.0	20.0	30.0	4.0	•	56.0/12727
MR80	100	125	160	28.0	12.0	18.0	25.0	35.0	5.0	•	80.0/18182
MR112	100	125	160	32.0	15.0	21.0	35.0	40.0	6.0	•	112.0/25454
MR160	100	125	160	37.0	18.0	25.0	40.0	50.0	7.0	•	160.0/36364
MR224	125	160	200	43.0	21.0	30.0	44.0	60.0	8.0	•	224.0/50909
MR315	160	200	250	48.0	25.0	36.0	50.0	70.0	10.0	•	315.0/71591

RBL chain number	P mm			b1 min mm	d2 max mm	d5 max mm	h4 mm	h2 max mm	T max mm	W mm	Q min mm
FVR40	80	100	125	18.0	10.0	15.0	20.0	25.0	3.0	•	42.0/9545
FVR63	100	125	160	22.0	12.0	18.0	25.0	30.0	4.0	•	64.0/l4545
FVR90	100	125	160	25.0	14.0	20.0	30.0	35.0	5.0	•	100.0/22727
FVR112	100	125	160	30.0	16.0	22.0	35.0	40.0	6.0	•	120.0/27272
FVR140	125	160	200	35.0	18.0	26.0	38.0	45.0	6.0	•	145.0/32954
FVR180	125	160	200	45.0	20.0	30.0	44.0	50.0	8.0	•	190.0/43181
FVR250	160	200	250	55.0	26.0	36.0	50.0	60.0	8.0	•	275.0/62499

Dimensions are specified by the customer

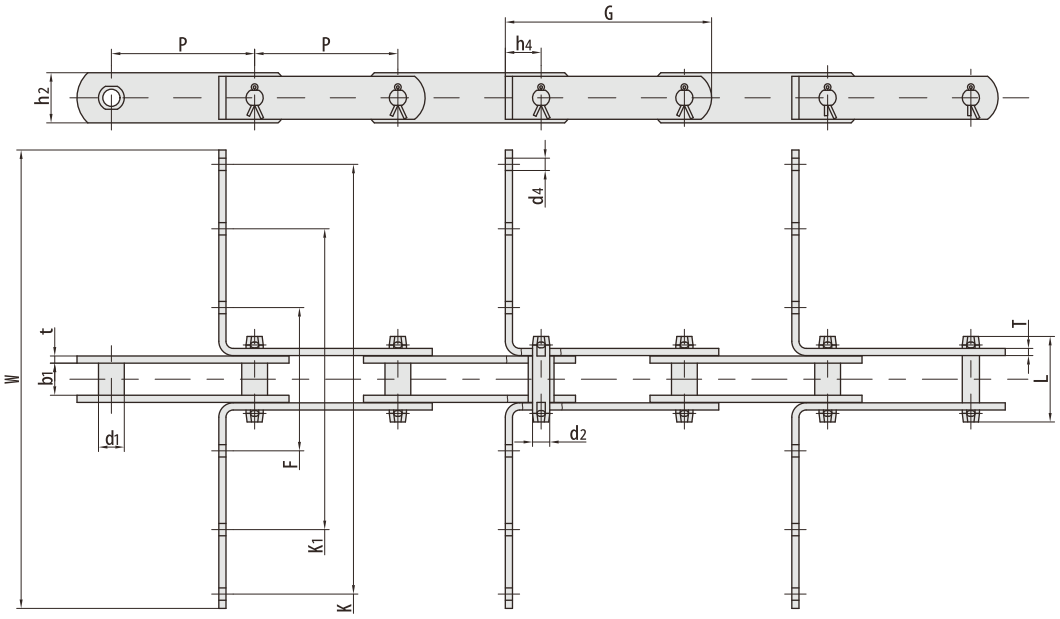

RBL chain number	Pitch P mm	Bush diameter d1 max mm	Width between inner b1 min mm	Pin diameter d2 max mm	Pin length L max mm	Tensile strength Q min kN/LBF	Average Tensile strength Qo kN	Weight q kg/m
PR100F8	100.00	18.00	22.00	12.00	64.00	98.00/22030	107.80	6.10
PR100F5	100.00	18.00	22.00	12.00	62.00	98.00/22030	107.80	5.70
PR100F3	100.00	18.00	22.00	12.00	60.00	98.00/22030	107.80	5.20
PR100F9	100.00	18.00	22.00	12.00	64.00	98.00/22030	107.80	6.70
PR100F6	100.00	18.00	22.00	12.00	62.00	98.00/22030	107.80	6.30
PR100F4	100.00	18.00	22.00	12.00	60.00	98.00/22030	107.80	5.70

RBL chain number	G mm	F mm	W mm	K1 mm	K mm	h4 mm	h2 mm	d4 mm	t/T mm
PR100F8	144.00	100.00	230.00	-	210.00	25.00	35.00	10.30	6.00
PR100F5	144.00	100.00	230.00	-	210.00	25.00	35.00	10.30	5.00/6.00
PR100F3	144.00	100.00	230.00	-	210.00	25.00	35.00	10.30	5.00
PR100F9	144.00	100.00	320.00	210.00	300.00	25.00	35.00	10.30	6.00
PR100F6	144.00	100.00	320.00	210.00	300.00	25.00	35.00	10.30	5.00/6.00
PR100F4	144.00	100.00	320.00	210.00	300.00	25.00	35.00	10.30	5.00

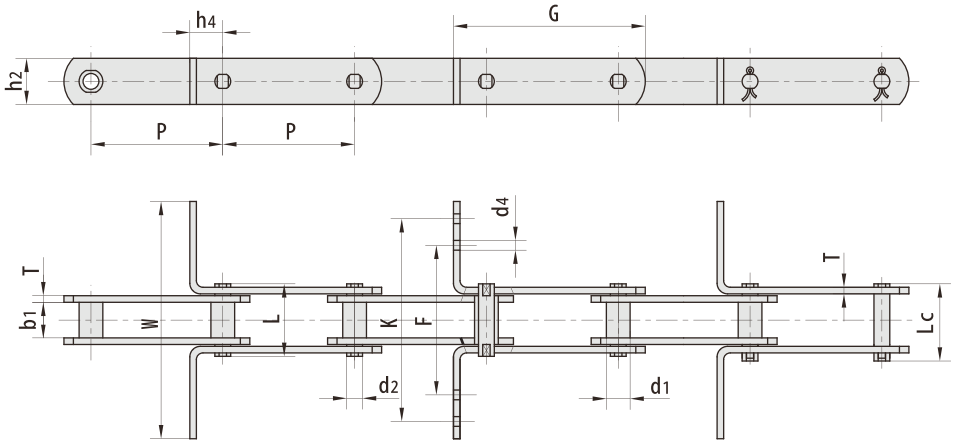

RBL chain number	Pitch	Bush diameter	Width between inner	Pin diameter	Pin length		Tensile strength	Average Tensile strength	Weight
	P mm	d1 max mm	b1 min mm	d2 max mm	L max mm	Lc max mm	Q min kN/LBF	Qo kN	q kg/m
P66.5F1	66.5	22.0	27.00	12.00	63.3	-	120.0/26976	132.0	6.10
FVR40F5P80	80.0	32.0*	18.00	10.00	36.0	40.0	40.0/8992	44.0	3.20
MR22F1B100	100.0	12.0	12.50	8.00	30.6	34.0	22.0/4946	24.2	1.77
MR112F7S100	100.0	30.0*	32.00	15.00	64.5	69.0	112.0/25179	123.2	8.95
MR112F8S100	100.0	30.0*	32.00	15.00	64.5	69.0	112.0/25179	123.2	9.53
MR160F7S100	100.0	36.0*	37.00	18.00	75.7	84.7	160.0/36000	176.0	15.87
MR160F8S100	100.0	36.0*	37.00	18.00	75.7	84.7	160.0/36000	176.0	13.80
MR160F11S100	100.0	36.0*	37.00	19.60	75.7	84.7	160.0/36000	176.0	13.85
MR160F10B100	100.0	25.0	37.00	19.70	75.7	84.7	160.0/36000	176.0	13.16
M80P100F1	100.0	18.0	28.00	12.00	55.0	58.5	80.0/18162	88.0	5.19
M180P100	100.0	26.0	28.85	18.00	62.5	-	180.0/40909	198.0	10.25
FVR40F4B100	100.0	15.0	18.00	10.00	40.0	43.5	40.0/8992	44.0	2.88
FVR40F6B100	100.0	15.0	18.00	10.00	36.0	40.0	40.0/8992	44.0	2.10
FVR63F2B100	100.0	18.0	22.00	12.00	46.0	50.0	64.0/14387	70.4	3.70
FVR63F3B100	100.0	18.0	22.00	12.00	46.0	50.0	64.0/11240	70.4	3.90
FVR90F8B100	100.0	20.0	25.00	14.00	-	56.4	65.0/14612	71.5	7.80
MR112F19B100	100.0	21.0	32.00	15.00	64.5	69.0	112.0/27272	123.2	8.30
MR160F16S100	100.0	36.0*	37.00	18.00	75.7	84.7	160.0/36000	176.0	13.70
MR160F20S100	100.0	25.0	37.00	18.00	75.7	84.7	160.0/36000	176.0	13.74
P100F16	100.0	23.0	28.00	16.00	66.0	-	115.0/26136	127.0	6.60
P101.6	101.6	44.5	50.80	23.84	136.5	-	600.0/136362	660.0	34.96
PR101.6F1	101.6	24.6	50.80	15.88	98.0	103.0	180.0/40909	198.0	12.10
MR224F1S125	125.0	42.0*	42.00	21.00	85.0	91.0	224.0/50357	246.4	17.92
M310P125	125.0	40.0*	52.00	20.00	103.4	109.4	303.8/69045	334.0	19.88
M310F1P125	125.0	40.0*	52.00	20.00	103.4	109.4	303.8/69045	334.0	24.88

*Indicates the external diameter of roller

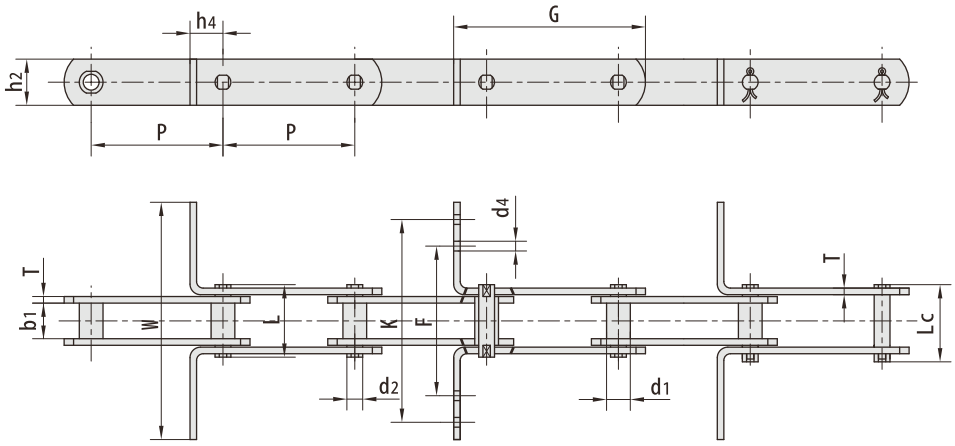

RBL chain number	G mm	F mm	W mm	K mm	h4 mm	h2 mm	d4 mm	t/T mm
P66.5F1	112.0	100.0	160.0	-	28.75	29.0	13X25	6.0
FVR40F5P80	104.0	-	80.0	-	20.0	25.0	-	3.0
MR22F1B100	132.7	-	150.0	-	16.4	22.0	-	3.0
MR112F7S100	160.0	120.0	235.0	205.0	35.0	40.0	12.0	6.0
MR112F8S100	160.0	-	285.0	-	35.0	40.0	-	6.0
MR160F7S100	170.0	125.0	386.0	356.0	40.0	50.0	12.0	7.0
MR160F8S100	170.0	115.0	235.0	205.0	40.0	50.0	18.0	7.0
MR160F11S100	170.0	115.0	235.0	205.0	40.0	50.0	19.7	7.0
MR160F10B100	170.0	140.0	290.0	260.0	40.0	50.0	19.7	7.0
M80P100F1	145.5	-	180.0	-	25.0	35.0	-	5.0
M180P100	163.0	-	185.0	-	35.0	50.0	-	6.0
FVR40F4B100	134.5	-	200.0	-	20.0	25.0	-	4.0
FVR40F6B100	140.0	-	130.0	-	25.0	25.0	-	3.0
FVR63F2B100	142.5	-	190.0	-	25.0	30.0	-	4.0
FVR63F3B100	142.5	-	230.0	-	25.0	30.0	-	4.0
FVR90F8B100	145.0	-	250.0	-	25.0	35.0	-	5.0
MR160F20B100	165.0	-	280.0	-	40.0	50.0	-	7.0
PR101.6F1	165.8	134.0	223.0	196.0	40.0	38.1	11.1	9.7
MR80F5B125	170.0	-	280.0	-	25.0	35.0	-	5.0
P100F16	143.0	91.8	180.0	159.8	25.0	36.0	6.5	6.0
P101.6	198.6	-	206.5	-	62.0	60.0	-	14.5
MR80F7B125	170.0	91.5	180.0	156.5	25.0	35.0	6.6	5.0
MR224F1S125	203.0	-	235.0	-	44.0	60.0	-	8.0
M310P125	195.0	-	270.0	-	35.0	55.0	-	10.0
M310F1P125	195.0	-	560.0	-	35.0	55.0	-	10.0

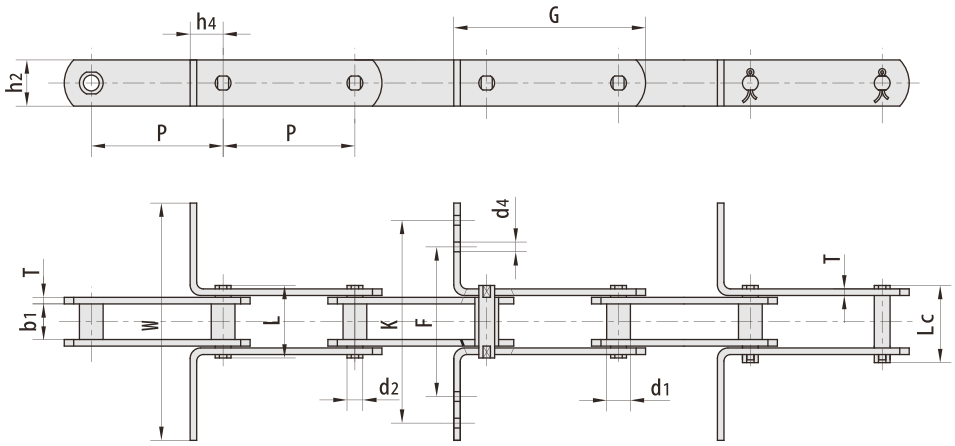

RBL chain number	Pitch	Bush diameter	Width between inner plates	Pin diameter	Pin length		Tensile strength	Average Tensile strength	Weight
	P mm	d1 max mm	b1 min mm	d2 max mm	L max mm	Lc max mm	Q min kN/LBF	Qo kN	q kg/m
FVR90F1B125	125.0	20.0	25.00	14.00	52.0	56.4	150.0/33743	165.0	6.16
P125F3	125.0	25.0	36.00	18.00	82.0	-	220.0/49999	242.0	11.17
P125F4	125.0	25.0	36.00	18.00	82.0	-	220.0/49999	242.0	9.83
MR80F5B125	125.0	18.0	28.00	12.00	55.0	58.5	80.0/18162	88.0	5.24
MR80F7B125	125.0	18.0	28.00	12.00	55.4	60.0	80.0/17984	88.0	5.00
MR80F8B125	125.0	18.0	28.00	12.00	59.4	64.0	112.0/27272	123.2	6.30
MR112F11B125	125.0	25.0	20.00	19.05	49.0	56.0	112.0/27272	123.2	5.71
MR112F18B125	125.0	21.0	32.00	15.00	64.5	69.0	112.0/27272	123.2	7.60
MR160F13B125	125.0	25.0	37.00	18.00	75.7	84.7	160.0/36000	176.0	7.90
MR160F18B125	125.0	25.0	37.00	18.00	75.7	84.7	160.0/36000	176.0	11.90
MR112F20B125	125.0	21.0	32.00	15.00	-	72.5	112.0/27272	123.2	8.52
M310F1P150	150.0	40.0*	52.00	20.00	103.4	109.4	303.8/69045	334.0	19.13
PR150F3	150.0	30.0	38.00	21.00	-	83.00	200.0/44960	220.0	12.40
FVR112F4P150	150.0	46.0*	20.00	16.00	52.0	56.0	112.0/25454	123.2	6.60
MR112F15B150	150.0	21.0	32.00	15.00	64.5	69.0	112.0/27272	123.2	6.95
MR112F16B150	150.0	21.0	32.00	15.00	64.5	69.0	112.0/27272	123.2	6.69
FVR112F3B155	155.0	22.0	65.00	16.00	109.0	-	120.0/26977	132.0	7.13
MR160F4S160	160.0	36.0*	37.00	18.00	85.0	-	160.0/36000	176.0	11.39
FVR180F2B160	160.0	30.0	49.00	20.00	91.0	97.0	250.0/56203	275.0	15.53
P160F12	160.0	50.0*	34.00	20.00	77.8	-	160.0/35993	176.0	10.50
MR80F3B160	160.0	18.0	28.00	12.00	55.0	58.5	80.0/18162	88.0	4.90
MR450F1S200	200.0	60.0*	56.00	30.00	119.0	132.0	450.0/101165	495.0	35.23

*Indicates the external diameter of roller

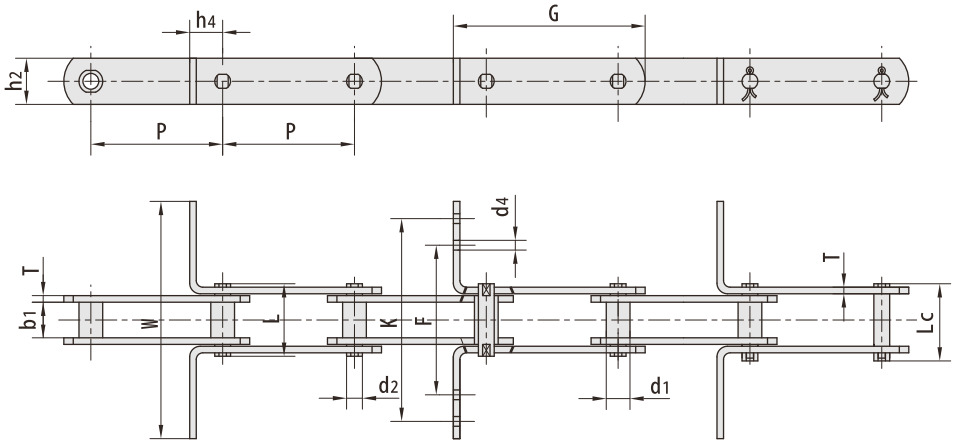

RBL chain number	G mm	F mm	W mm	K mm	h4 mm	h2 mm	d4 mm	T mm
FVR90F1B125	175.0	90.0	290.0	270.0	30.0	40.0	9.0	5.0
P125F3	190.0	139.5	290.0	259.5	35.0	51.0	8.5	6.0
P125F4	190.0	119.5	220.0	191.5	35.0	51.0	8.5	6.0
MR160F16S100	170.0	118.0	235.0	208.0	40.0	50.0	12.0	7.0
MR80F8B125	175.0	92.0	280.0	252.0	30.0	35.0	6.5	6.0
MR112F11B125	184.0	90.0	190.0	160.0	35.0	40.0	7.0	5.0
MR112R18B125	185.0	-	235.0	-	35.0	40.0	-	6.0
MR112F19B100	185.0	-	235.0	-	35.0	40.0	-	6.0
MR112F20B125	185.0	-	240.0	-	35.0	40.0	-	6.0
MR160F13B125	195.5	-	320.0	-	40.0	50.0	-	7.0
MR160F18B125	195.5	-	320.0	-	40.0	50.0	-	7.0
M310F1-P-150	220.0	-	350.0	-	40.0	50.0	-	10.0
PR150F3	234.0	98.0	210.0	250.0	50.0	56.0	11.0	8.0
FVR112F4P150	203.0	83.0	109.0	-	28.0	40.0	10.0	6.0
MR80F3B160	205.0	-	320.0		25.0	35.0	-	5.0
MR112F15B150	210.0	120.0	280.0	240.0	35.0	40.0	9.0	6.0
FVR112F3B155	207.5		250.0	-	30.0	40.0	-	6.0
MR160F4S160	248.5	140.0	300.0	250.0	63.5	50.0	18.0	7.0
FVR180F2B160	230.0	248.0	368.0	308.0	35.0	60.0	8.0	8.0
P160F12	230.0	-	214.5	-	40.0	50.0	-	6.0
MR112F16B150	210.0	100.0	240.0	200.0	35.0	40.0	9.0	6.0
MR450F1S200	307.0	-	488.0	-	60.0	80.0	-	12.0

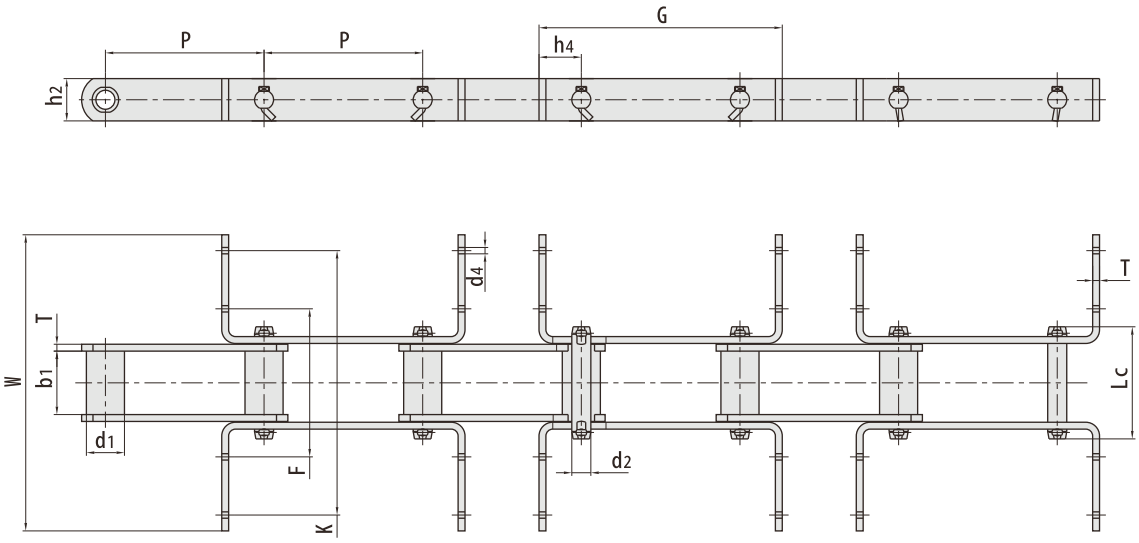

RBL chain number	Pitch P mm	Bush diameter d1 max mm	Width between inner plates b1 min mm	Pin diameter d2 max mm	Pin length Lc max mm	Tensile strength Q min kN/LBF	Average Tensile strength Qo kN	Weight q kg/m
PR150F4	150.0	36.0	60.00	18.00	106.00	160.0/35968	176.00	11.50

RBL chain number	G mm	F mm	W mm	K mm	h4 mm	h2 mm	d4 mm	T mm
PR150F4	230.0	140.0	280.0	250.0	40.0	40.0	6.0	6.5
P150F147	236.0	-	380.0	-	43.0	60.0	-	8.0

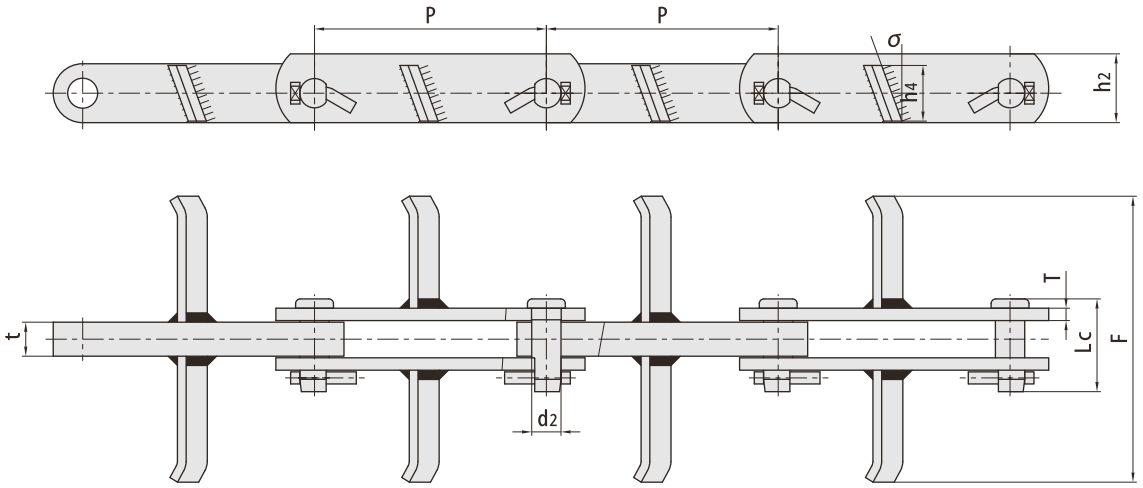

RBL chain number	Pitch	Pin diameter	Pin length	inner plate depth	Plate thickness	Attachment dimemsion			Tensile strength	Average Tensile strength	Weight
	P mm	d2 max mm	Lc max mm	h2 max mm	t/T max mm	F mm	h4 mm	σ	Q min kN/LBF	Qo min mm	q kg/m
BC150F1	150.0	18.95	60.0	44.5	22.0/7.9	185.0	36.0	20°	280.6/63081	308.7	8.90

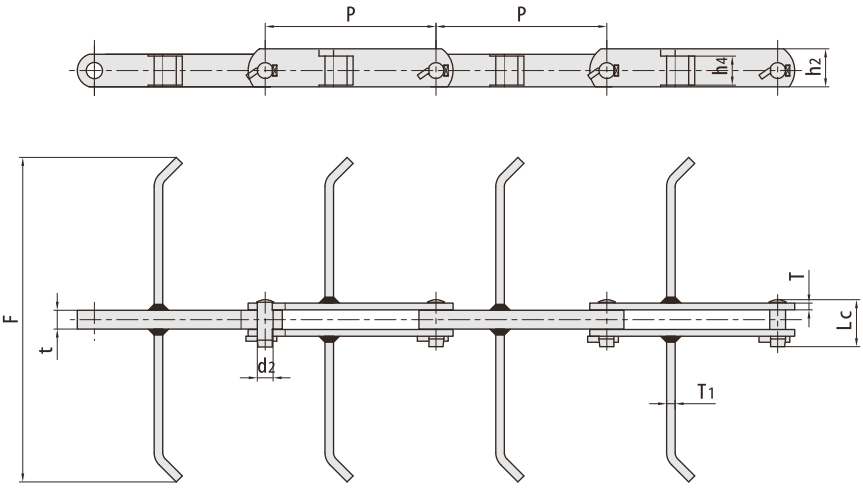

RBL chain number	Pitch	Pin diameter	Pin length	inner plate depth	Plate thickness	Attachment dimemsion			Tensile strength	Average Tensile strength	Weight
	P mm	d2 max mm	Lc max mm	h2 max mm	t/T max mm	F mm	T1 mm	h4 mm	Q min kN/LBF	Qo min mm	q kg/m
BC200F5	200.0	18.50	56.0	44.5	22.0/7.9	380.0	10.0	34.0	280.6/63081	308.7	11.90

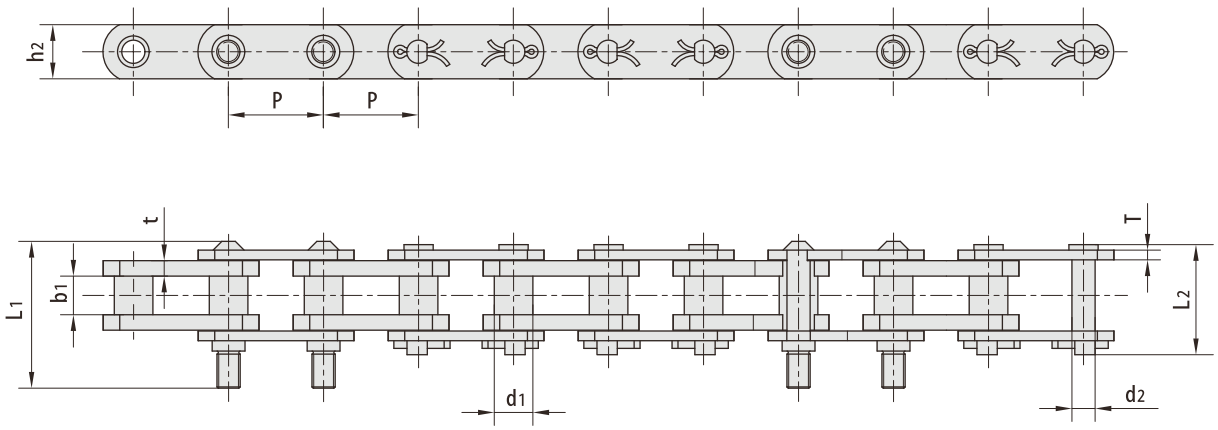

RBL chain number	Pitch	Bush diameter	Width between inner plates	Pin diameter	Pin length		plate depth	Plate thickness	Tensile strength	Average Tensile strength	Weight
	P mm	d1 max mm	b1 min mm	d2 max mm	L max mm	Lc max mm	h2 max mm	t/T max mm	Q min kN/LBF	Qo kN	q kg/m
*P78	78.1	31.75	34.50	19.05	128.5	90.5	44.5	9.6	140.0/31818	166.88	14.09
*P78F1	78.1	31.75	31.75	19.05	122.0	90.5	44.5	12.7/8.0	140.0/31818	166.88	14.22
*P78F2	78.1	31.75	31.75	19.05	129.0	90.5	44.5	12.7/8.0	140.0/31818	166.88	14.59
*P78F3	78.1	31.75	31.25	19.05	124.0	90.5	44.5	12.7/8.0	140.0/31818	166.88	14.60
#P78F5	78.1	31.75	34.50	19.05	124.0	91.0	44.5	9.7	140.0/31818	166.88	14.75
#P78F6	78.1	31.75	32.00	20.70	127.0	93.0	46.0	10.0	140.0/31818	166.88	15.40

*Connecting link with solid long cotter

Connecting link with T pin

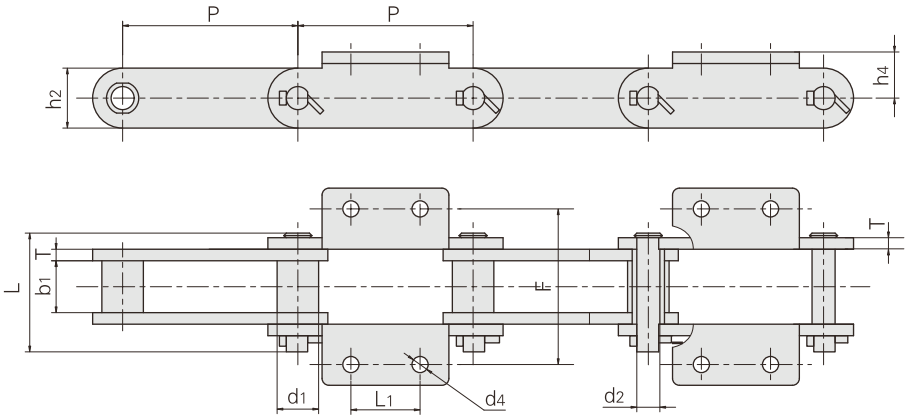

Conveyor type	RBL chain number	Pitch P mm	Roller diameter d1 mm	Width between inner plates b1 mm	Pin diameter d2 mm	Pin length L mm	plate depth h2 mm	Plate thickness T mm	Attachment dimemsion L1 mm	F mm	h4 mm	d4 mm	Tensile strength Q min kN/LBF
D5400	P152F123	152.4	36.0	36.5	15.5	90.0	50.0	8.0	60	120	38	14	275/61863
D5640	P250F44	250.0	48.5	57.6	22.2	120.0	75.0	10.0	125	160	60	12	560/125976
	*P160F76K2	160.0	40.0	66.0	26.0	128.0	70.0	10.0	120	175	43	15	450/101164
	*P160F82K2	160.0	36.0	65.0	20.0	108.0	60.0	9.0	60	130	45	14	300/67443
	P160F99K2	160.0	50.0	55.0	20.0	108.0	60.0	9.0	60	130	65	17	300/67443

*Bush chain: d1 in the table indicates the external diameter of the bush.

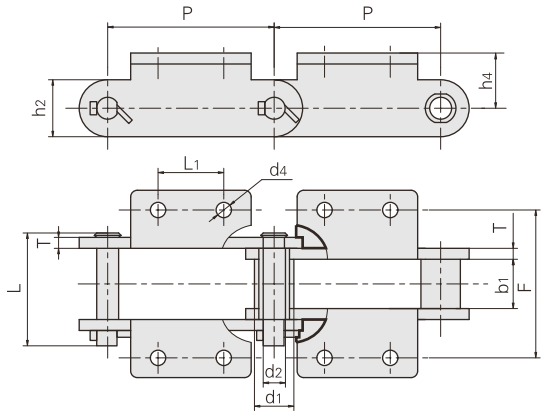

Conveyor type	RBL chain number	Pitch P mm	Roller diameter d1 mm	Width between inner plates b1 mm	Pin diameter d2 mm	Pin length L mm	plate depth h2 mm	Plate thickness T mm	Attachment dimemsion L1 mm	F mm	h4 mm	d4 mm	Tensile strength Q min kN/LBF
SDB400	P250F45	250.0	36.0	40.0	20.0	89.0	65.0	8.0	85	130	55	14.0	450/101230
SDB500(540)	P250F46	250.0	36.0	44.0	21.0	94.0	85.0	8.0	85	132	55	18.5	500/112479
SDB630(600)	P250F47	250.0	45.0	52.0	30.0	128.0	115.0	10.0	85	162	75	18.5	1000/224957

For combined stacker / reclaimers

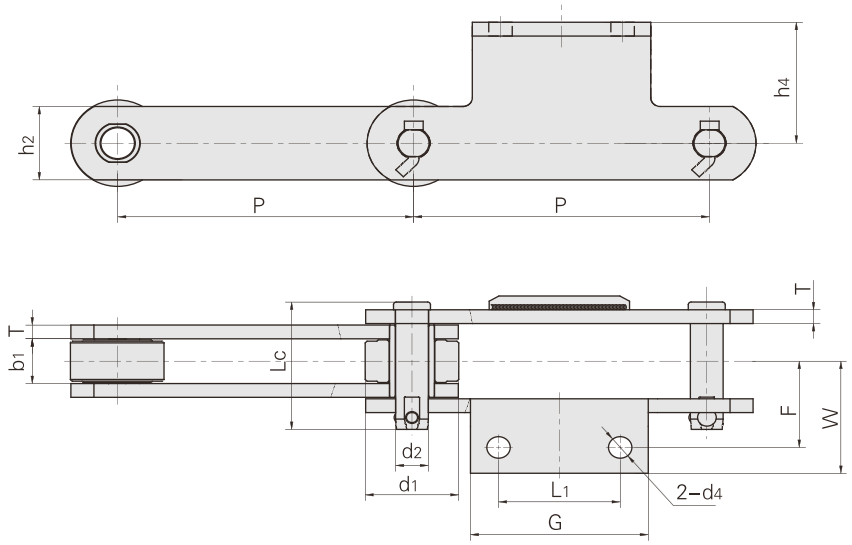

RBL chain number	Pitch P mm	Roller diameter d1 max mm	Width between inner plates b1 min mm	Pin diameter d2 max mm	Pin length Lc max mm	plate depth h2 mm	Plate thickness T mm	Tensile strength Q min kN/LBF	Average Tensile strength Qo kN
P250F74	250.0	76.5	40.0	24.0	117.0	60.0	12.0	400/89983	450.0
P315F11	315.0	100.0	52.0	35.0	148.0	85.0	16.0	800/179966	900.0

RBL chain number	P mm	L1 mm	G mm	F mm	W mm	h4 mm	d4 mm
P250F74	250.0	100.0	160.0	83.5	111.5	149.0	21.0
P315F11	315.0	130.0	190.0	100.0	130.0	140.0	25.0

For combined stacker / reclaimers

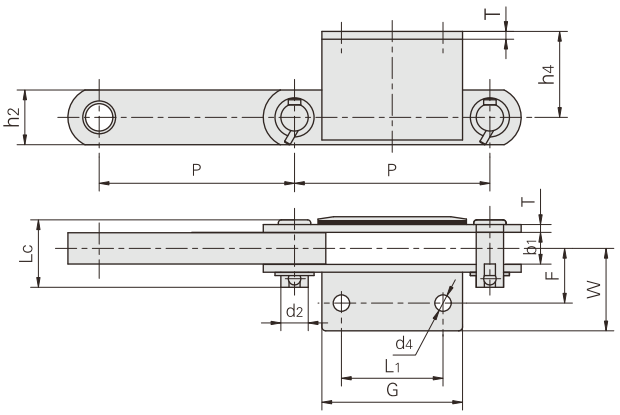

RBL chain number	L1 mm	G mm	d4 mm	h4 mm	F mm	W mm
P250F61	130.0	185.0	21.0	110.0	70.0	105.0

RBL chain number	Pitch P mm	Width between inner plates B1 mm	Pin diameter d2 mm	Pin length L1 mm	plate depth h2 mm	Plate thickness T mm	Tensile strength Q min kN/LBF	Average Tensile strength Qo kN
P250F61	250.0	40.0	35.0	91.0	70.0	10.0	400/69983	450.0

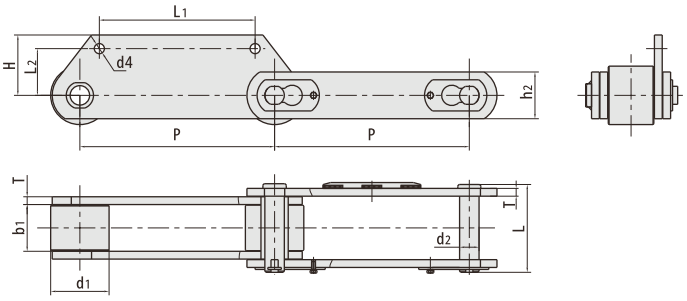

RBL chain number	Pitch P mm	Roller diameter d1 max mm	Width between inner plates b1 min mm	Pin diameter d2 max mm	Pin length L max mm	plate depth h2 max mm	Plate thickness t/T mm	Attachment dimemsion H mm	Attachment dimemsion L1 mm	Attachment dimemsion L2 mm	Attachment dimemsion d4 mm	Tensile strength Q min kN/LBF	Average Tensile strength Qo kN
P500F4	500.0	150.0	120.0	50.0	227.0	130.0	20.0	155.0	400.0	120.0	26.0	2650/595720	2915.0
P500F5	500.0	150.0	120.0	50.0	227.0	120.0	20.0	155.0	400.0	120.0	26.0	2650/595720	2915.0
P500F9	500.0	150.0	120.0	55.0	227.0	140.0	20.0	155.0	400.0	120.0	32.0	2800/629440	3080.0
P500F10	500.0	150.0	120.0	50.0	219.0	120.0	18.0	155.0	400.0	120.0	26.0	1500/337200	1650.0

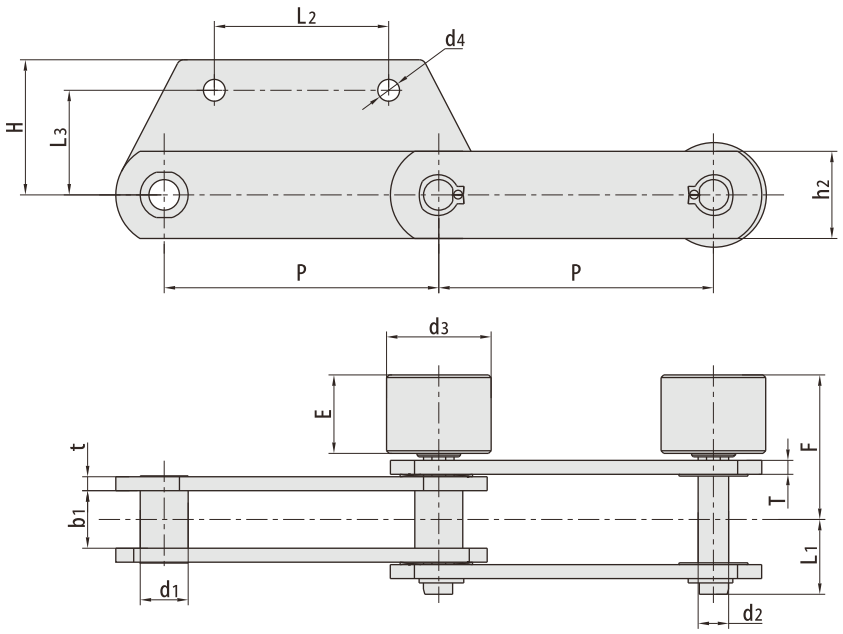

RBL chain number	Pitch P mm	Roller diameter d1 max mm	Width between inner plates b1 min mm	Pin diameter d2 max mm	Pin length L1 max mm	plate depth h2 max mm	Plate thickness t/T mm	Tensile strength Q min kN/LBF	Average Tensile strength Qo kN
P315F23	315.0	55.0	66.0	35.0	78.0	100.0	14.0	800/179840	880.0
P315F36	315.0	56.0	65.0	35.0	75.0	90.0	14.0	800/179840	880.0
P315F39	315.0	80.0	75.0	42.0	80.5	100.0	16/14	1100/24728	1210.0
P315F30SR1	315.0	55.0	60.0	30.0	63.5	90.0	12.0	630/141624	693.0
P400F14	400.0	63.0	90.0	40.0	92.5	100.0	16.0	1300/292240	1430.0
P400F15	400.0	75.0	130.0	50.0	120.5	130.0	18.0	1700/382160	1870.0
P500F8	500.0	70.0	124.0	50.0	118.8	120.0	16.0	1500/337200	1650.0

RBL chain number	H mm	L2 mm	L3 mm	d4 mm	F mm	E mm	d3 mm
P315F23	155.0	200.0	120.0	25.0	163.0	90.0	120.0
P315F36	155.0	280.0	120.0	25.0	163.0	90.0	120.0
P315F39	250.0	200.0	160.0	26.0	207.5	110.0	150.0
P315F30SR1	120.0	160.0	85.0	22.0	123.5	60.0	120.0
P400F14	155.0	300.0	115.0	25.0	168.0	70.0	120.0
P400F15	200.0	300.0	160.0	31.0	222.5	110.0	170.0
P500F8	155.0	400.0	120.0	26.0	217.3	110.0	150.0

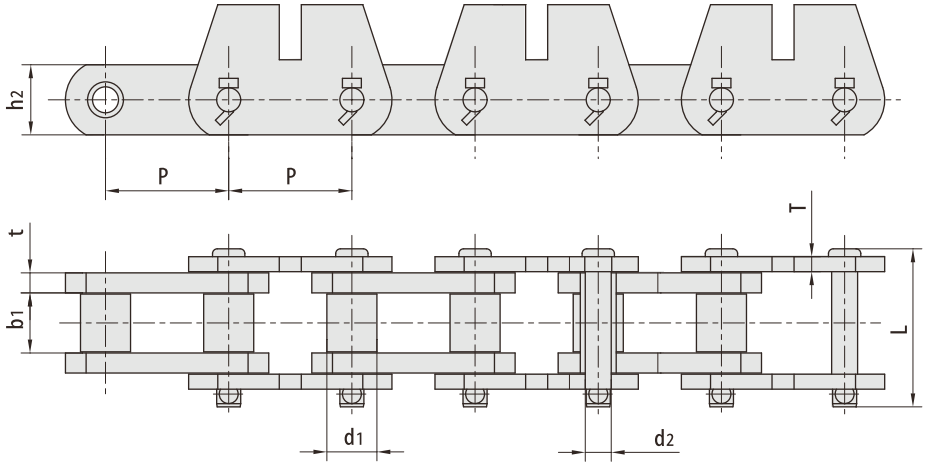

RBL chain number	Pitch P mm	Roller diameter d1 max mm	Width between inner b1 min mm	Pin diameter d2 max mm	Pin length L max mm	Inner plate depth h2 max mm	Plate thickness t/T mm	Tensile strength Q min kN/LBF	Average Tensile strength Qo kN	Weight q kg/m
P78.11F10	78.105	31.75	38.1	16.46	102.0	44.45	12.7/9.5	333.4/75000	350.0	16.73
P101.6F28	101.600	38.10	50.8	17.48	122.0	44.45	12.7	266.7/60000	293.3	21.66
P152F18	152.400	69.85	76.2	25.40	152.0	63.50	12.7	500.0/112480	650.0	43.23
P152F24	152.400	69.85	76.2	25.40	152.0	63.50	12.7	565.0/127100	650.0	38.38
P152F248	152.400	69.85	76.2	25.40	151.4	69.85	12.7	431.5/59001	474.7	44.70

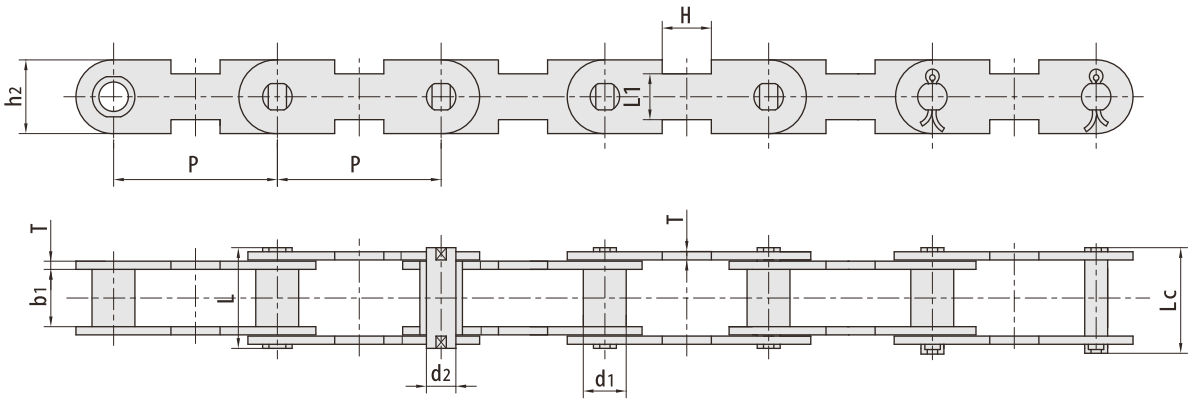

RBL chain number	Pitch P mm	Bush diameter d1 max mm	Width between inner plates b1 min mm	Pin diameter d2 max mm	Pin length L max mm	Pin length Lc max mm	Inner plate depth h2 max mm	Plate thickness T mm	Atlachment dinension H mm	Atlachment dinension L1 mm	Tensile strength Q min kN/LBF	Weight q kg/m
P100F49	100.0	20.0	25.0	14.0	51.5	55.0	35.0	5.0	30.0	28.0	90.0/20250	4.02
P100F54	100.0	26.0	35.0	18.0	65.5	71.0	45.0	6.0	30.0	28.0	100.0/22500	6.90

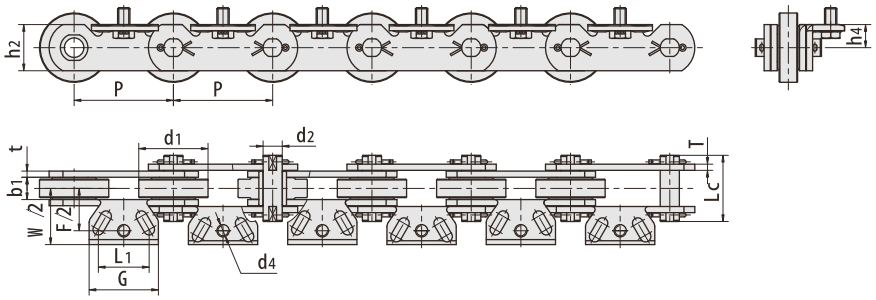

RBL chain number	Pitch P mm	Roller diameter d1 max mm	Width between inner plates b1 min mm	Pin diameter d2 max mm	Pin length Lc max mm	plate depth h2 max mm	Plate thickness t/T mm	Tensile strength Q min kN/LBF	Average Tensile strength Qo kN	Weight q kg/m
P129A1F1P	129.0	90.0	29.0	24.9	86.0	60.0	8.0	350.0/78683	385.0	22.6

RBL chain number	L1 mm	G mm	F mm	W mm	h4 mm	d4 mm
P129A1F1P	66.0	90.0	110.0	146.0	30.0	M16

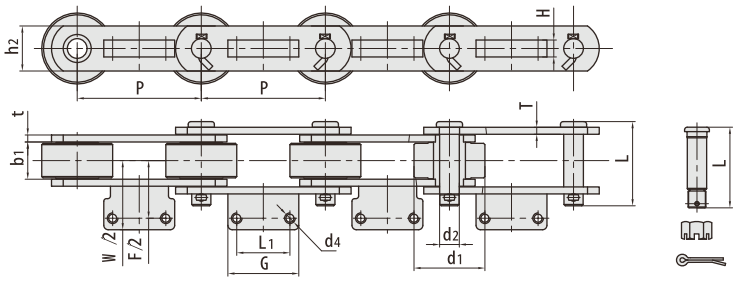

*Each pin with nut

RBL chain number	Pitch P mm	Roller diameter d1 max mm	Width between inner plates b1 min mm	Pin diameter d2 max mm	Pin length L max mm	plate depth h2 max mm	Plate thickness t/T mm	Tensile strength Q min kN/LBF	Weight q kg/m
P125F87A2*	125.0	80.0	42.0	22.23	97.0	50.8	7.9	222.4/49996	25.20
P140F50A2	140.0	80.0	42.0	22.23	95.0	50.8	7.9	222.4/49996	23.69
P173F1A2*	173.0	80.0	32.0	21.85	89.0	50.0	8.0/7.0	280.0/62944	19.20
P173F2A2*	173.0	80.0	43.0	21.85	102.0	50.0	8.0	280.0/62944	21.68

RBL chain number	P mm	G mm	L1 mm	F mm	W mm	H mm	d4 mm
P125F87A2*	125.0	71.0	45.0	130.0	156.0	19.1	M 12
P140F50A2	140.0	80.0	60.0	130.0	156.0	19.1	M 12
P173F1A2*	173.0	90.0	60.0	130.0	158.0	20.0	M 12
P173F2A2*	173.0	90.0	60.0	130.0	158.0	20.0	M 12

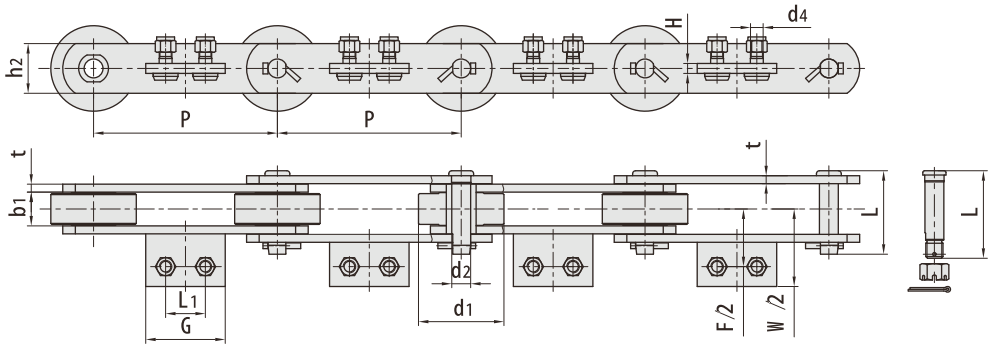

RBL chain number	Pitch P mm	Roller diameter d1 max mm	Width between inner plates b1 min mm	Pin diameter d2 max mm	Pin length L max mm	plate depth h2 max mm	Plate thickness t/T mm	Tensile strength Q min kN/LBF	Weight q kg/m
P140F51A2*	140.0	80.0	42.0	22.0	102.0	50.0	8.0	280.0/62944	24.8
P185F3A2	185.0	86.0	34.0	19.0	84.0	50.0	8.0	280.0/62944	17.8

RBL chain number	P mm	G mm	L1 mm	F mm	W mm	H mm	d4 mm
P140F51A2*	140.0	80.0	60.0	130.0	156.0	20.0	M 12
P185F3A2	185.0	80.0	40.0	116.0	156.0	10.0	M12X1.50

*Each pin with nut

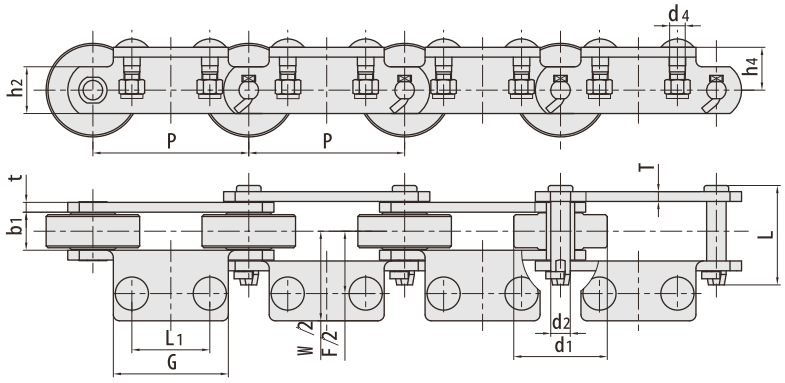

RBL chain number	Pitch P mm	Roller diameter d1 max mm	Width between inner plates b1 min mm	Pin diameter d2 max mm	Pin length L max mm	plate depth h2 max mm	Plate thickness t/T mm	Tensile strength Q min kN/LBF	Weight q kg/m
P127F12A2	127.0	76.2	31.0	15.90	81.0	38.1	8.0	180.0/40464	16.50
P152F230A2	152.4	65.0	35.0	$15.90	81.6	40.00	7.9	165.0/37092	13.30

RBL chain number	P mm	G mm	L1 mm	F mm	W mm	h4 mm	d4 mm
P127F12A2	127	93.7	63.5	101.6	146	34.9	1/2-13UNC
P152F230A2	152.4	90	50.0	100	130	30.0	M 10

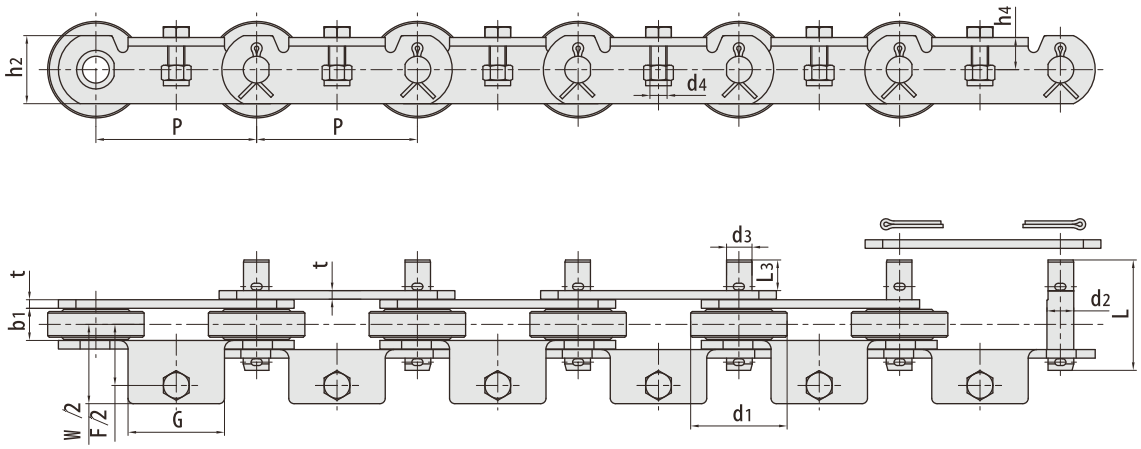

RBL chain number	Pitch P mm	Roller diameter d1 max mm	Width between inner plates b1 min mm	Pin diameter d2 max mm	Pin length L max mm	plate depth h2 max mm	Plate thickness t/T mm	Tensile strength Q min kN/LBF	Weight q kg/m
P150F145A1	150.0	90.0	30.0	25.0	103.0	63.5	8.0	300.0/67440	22.0
P192F2A1	192.0	100.0	30.0	25.4	110.0	63.5	9.5	400.0/89920	17.8

RBL chain number	P mm	G mm	F mm	W mm	h4 mm	d4 mm	d3 mm	L3 mm
P150F145A1	150.0	90.0	114.0	148.0	30.0	M16	24.8	28.6
P192F2A1	192.0	130.0	114.0	152.0	29.0	M16	31.8	25.1

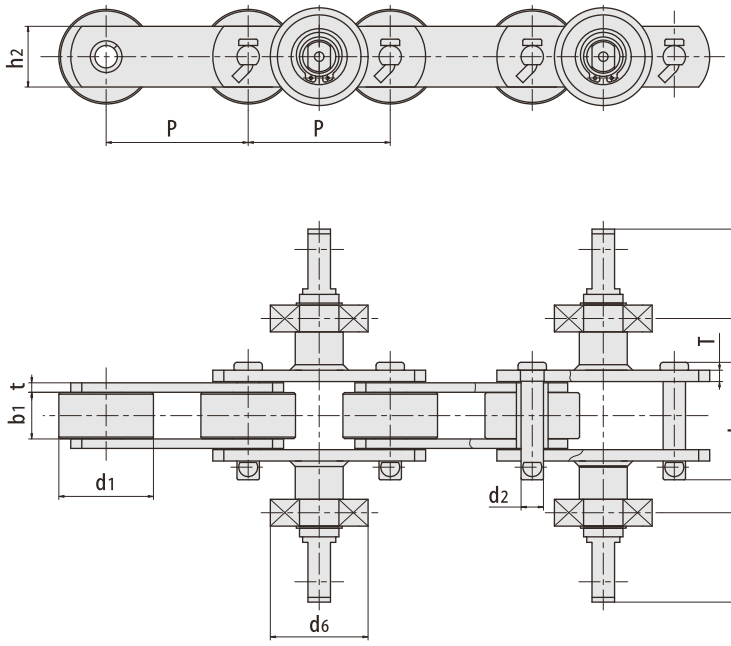

RBL chain number	Pitch	Roller diameter	Width between inner plates	Pin diameter	Pin length	plate depth	Plate thickness	Atlachment dinension			Tensile strength
	P mm	d1 max mm	b1 min mm	d2 max mm	Lc max mm	h2 max mm	t/T mm	F mm	W mm	d6 mm	Q min kN/LBF
P90F1	90.0	60.0	29.5	14.2	74.5	38.5	6.0/7.0	121.5	236.6	62.0	112.0/25178
P100F189	100.0	60.0	28.8	14.0	70.0	38.0	6.5	122.0	278.0	62.0	200.0/44960
P100F218	100.0	60.0	29.0	15.0	76.4	38.0	8.0	138.0	244.0	62.0	230.0/51704

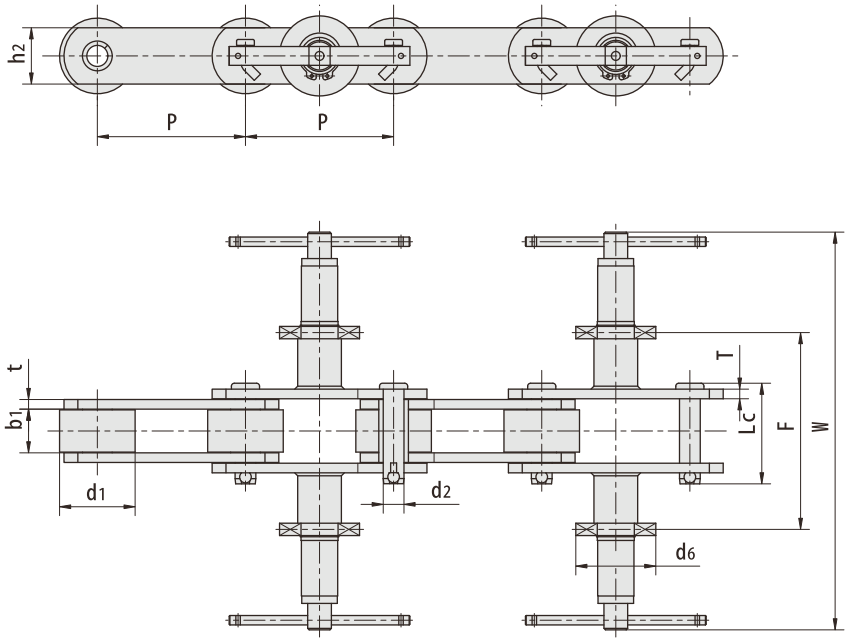

RBL chain number	Pitch	Roller diameter	Width between inner plates	Pin diameter	Pin length	plate depth	Plate thickness	Atlachment dinension			Tensile strength
	P mm	d1 max mm	b1 min mm	d2 max mm	Lc max mm	h2 max mm	t/T mm	F mm	W mm	d6 mm	Q min kN/LBF
P100F154	100.0	51.0	29.5	14.0	72.0	38.0	6.5	210.0	482.0	62.0	200.0/44960
P100F170	100.0	60.0	29.5	16.0	72.0	45.0	6.5	207.0	480.0	62.0	260.0/58448
P100F204	100.0	60.0	28.5	14.0	71.0	38.0	6.5	207.0	478.0	62.0	200.0/44960
P100F310	100.0	60.0	28.0	16.0	72.0	40.0	7.0	199.0	478.0	62.0	200.0/44960
P100F312	100.0	58.0	28.5	16.0	77.0	40.0	8.0	207.0	478.0	62.0	260.0/58448
P100F335	100.0	60.0	28.5	16.0	77.0	40.0	8.0	207.0	478.0	62.0	260.0/58449

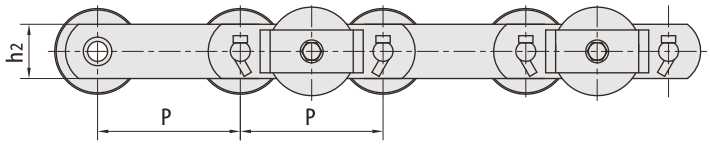

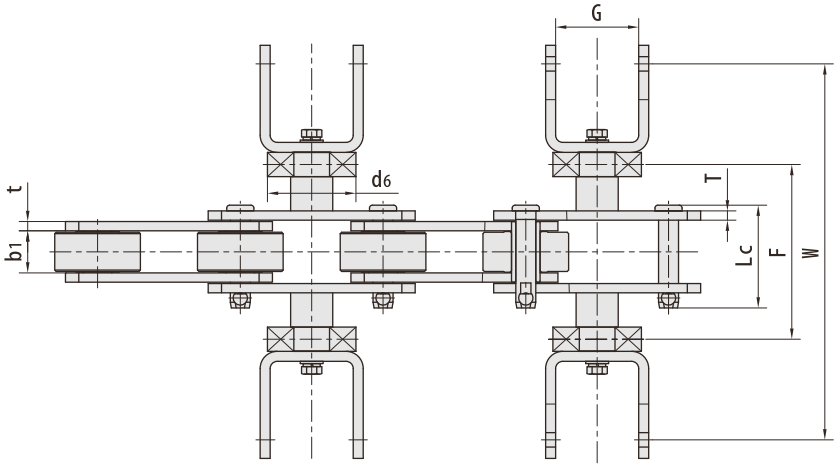

RBL chain number	Pitch	Roller diameter	Width between inner	Pin diameter	Pin length	plate depth	Plate thickness	Atlachment dinension				Tensile strength
	P mm	d1 max mm	b1 min mm	d2 max mm	Lc max mm	h2 max mm	t/T mm	F mm	W mm	d6 mm	G mm	Q min kN/LBF
P100F155	100	60	29.5	14	72	38	6.5	122	262	62	59.5	200.0/44960
P100F190*	100	60	28.5	14	71	38	6.5	121	262	62	58.5	200.044960
P100F205	100	60	29.5	14	71	38	6.5	121	263	62	58.2	200.0/44960
PI 00F328*	100	60	28.5	14	71	38	6.5	121	222	62	58.5	200.0/44960

*U Type attachment with reinforce rib

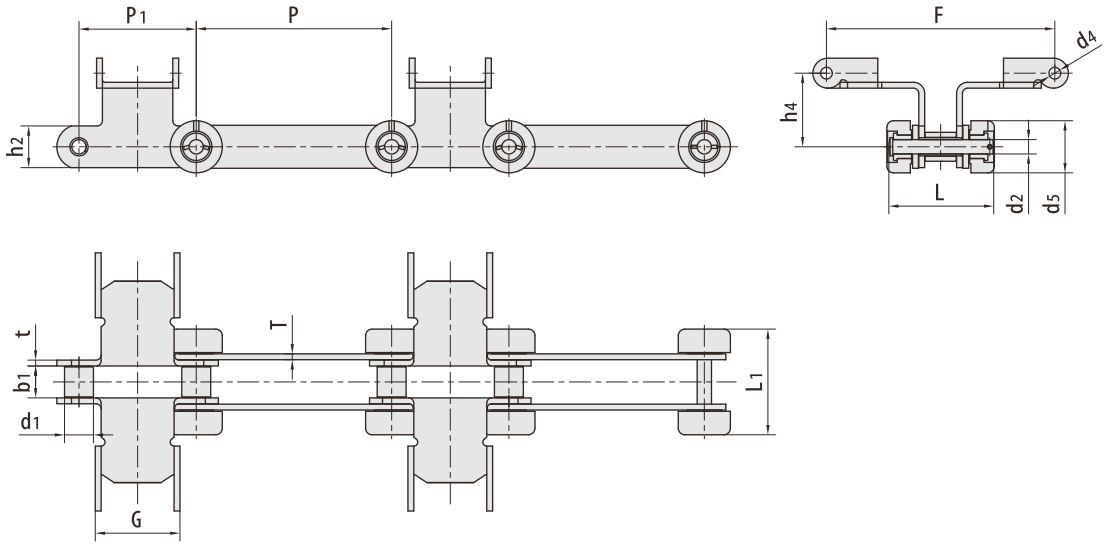

RBL chain number	Pitch		Roller diameter	Width between inner plates	Pin diameter	Pin length	plate depth	Plate thickness	Tensile strength	Weight
	P mm	P1 mm	d1 max mm	b1 min mm	d2 max mm	L max mm	h2 max mm	t/T mm	Q min kN/LBF	q kg/m
P100F13	100.0	-	22.23	22.5	10.8	76.5	32.0	6.0A.5	60/13488	9.32
P100F139	100.0		22.00	24.0	12.0	75.0	32.0	6.0	60/13488	11.87
P150/90	150.0	90.0	22.20	24.3	10.8	81.5	32.0	4.5	60/13488	8.10

RBL chain number	G mm	L1 mm	F mm	h4 mm	d4 mm	d5 mm
P100F13	74.6	79.5	175.0	56.5	9.2	40.0
P100F139	74.6	83.5	176.5	56.5	9.1	40.0
P150/90	65.0	82.0	175.0	57.0	9.2	40.0

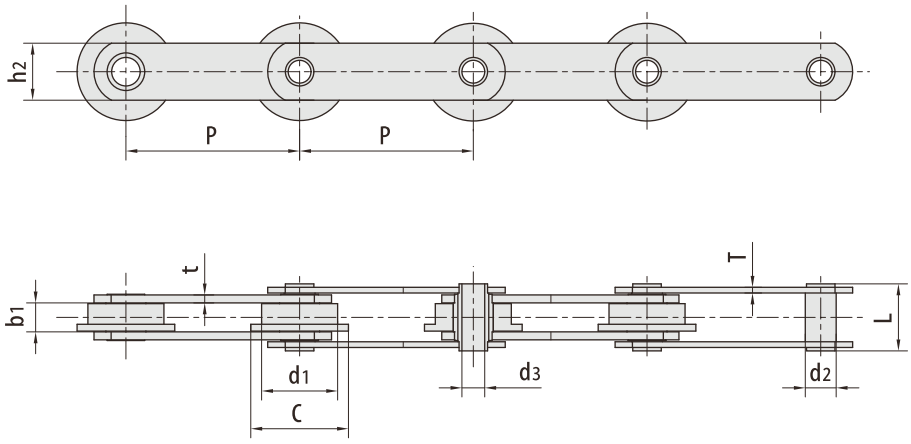

RBL chain number	Pitch	Width between inner plates	Roller diameter		Pin diameter		Pin length	plate depth	Plate thickness		Tensile strength	Average Tensile strength	Weight
	P mm	b1 min mm	d1 max mm	C max mm	d2 max mm	d3 min mm	L max mm	h2 max mm	T max mm	t max mm	Q min kN/LBF	Qo kN	q kg/m
W 152	152.4	25.40	66.7	85.7	27.1	20.0	58.8	50.0	5.0	7.0	110.0/25000	122.1	10.78

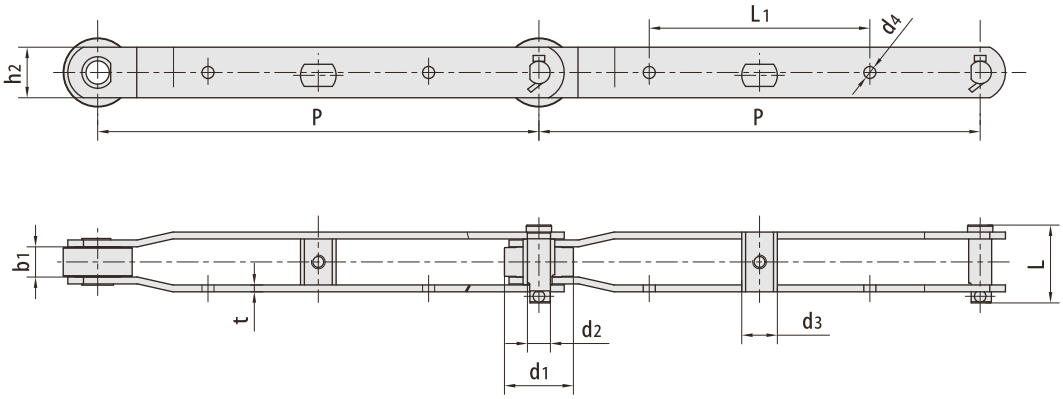

RBL chain number	Pitch	Roller diameter	Width between inner plates	Pin diameter			plate dinension				Tensile strength	Weight
	P mm	d1 max mm	b1 min mm	d2 max mm	d3 max mm	L max mm	h2 mm	t mm	L1 mm	d4 mm	Q min kN/LBF	q kg/m
P609.6F1	609.60	95.25	41.65	31.75	49.20	107.80	69.85	9.50	304.80	16.66	230.0/51704	16.77

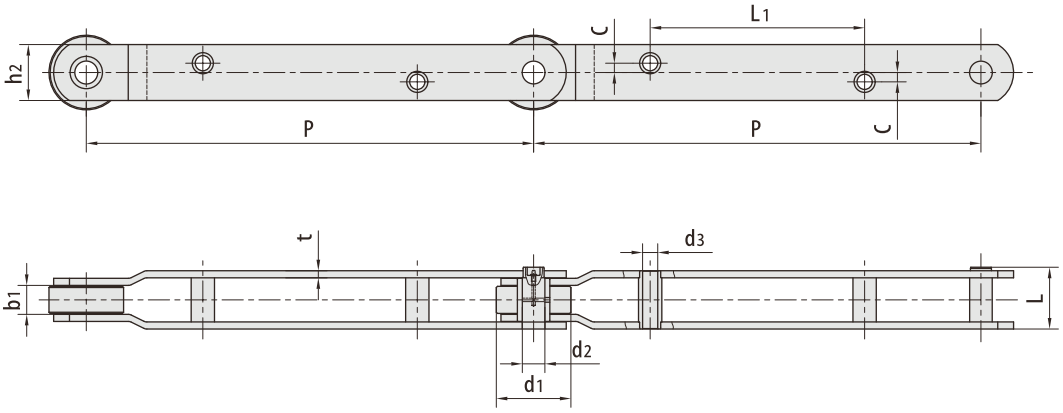

RBL chain number	Pitch	Roller diameter	Width between inner plates	Pin diameter			plate dinension				Tensile strength	Weight
	P mm	d1 max mm	b1 min mm	d2 max mm	d3 max mm	L max mm	h2 mm	t mm	L1 mm	d4 mm	Q min kN/LBF	q kg/m
P609.6F2	609.60	101.60	39.69	30.73	30.64	84.30	76.20	9.50	12.70	292.10	80.0/17984	17.35

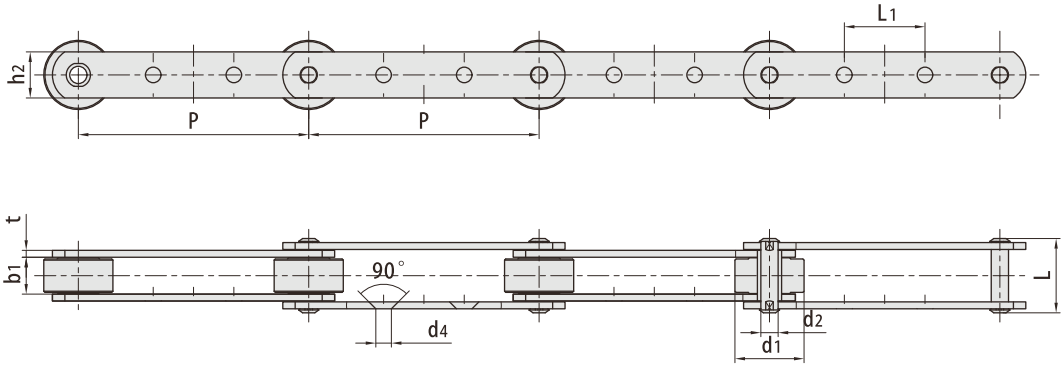

RBL chain number	Pitch	Roller diameter	Width between inner plates	Pin diameter		plate dinension				Tensile strength	Weight
	P mm	d1 max mm	b1 min mm	d2 max mm	L max mm	h2 mm	t mm	L1 mm	d4 mm	Q min kN/LBF	q kg/m
M112GA2F2PA6200	200.00	60.00	32.00	15.00	64.50	40.00	6.00	70.00	13.50	112.0/25178	5.30

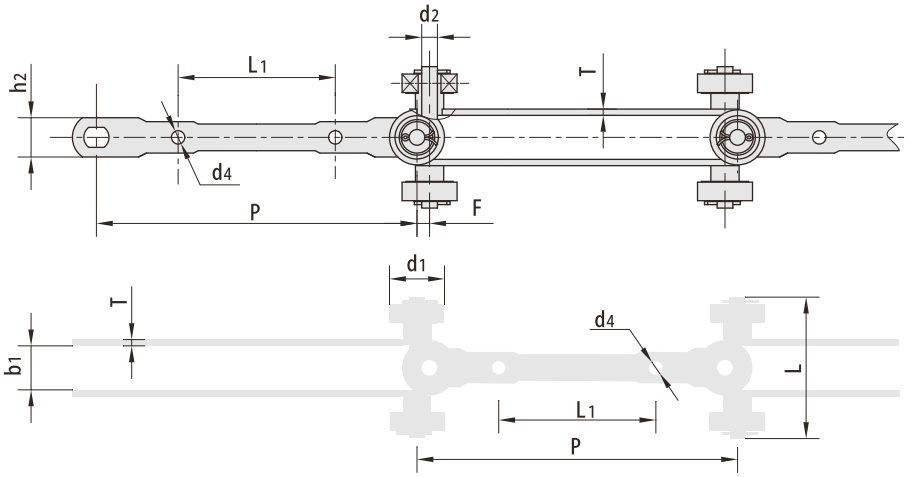

RBL chain number	Pitch	Roller diameter	Width between inner plates	Pin diameter	Pin length	plate dinension		Atlachment dinension			Tensile strength
	P mm	d1 max mm	b1 min mm	d2 max mm	L max mm	h2 max mm	T max mm	L1 mm	d4 mm	F mm	Q min kN/LBF
P210	204.0	35.0	27.5	10.0	90.0	25.0	4.0	100.0	8.5	8.0	50.0/11364
SJ406S50	203.2	35.0	27.5	10.0	90.0	25.0	4.0	100.0	8.5	11.0	50.0/11364

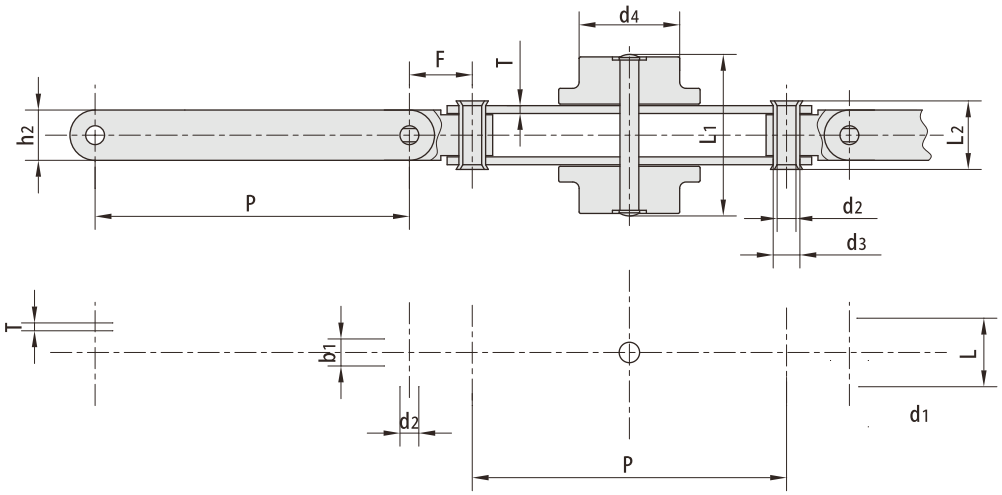

RBL chain number	Pitch	Roller diameter		Width between inner plates	Pin diameter		Pin length			plate dinension		Atlachment dinension	Tensile strength
	P mm	d1 max mm	d4 max mm	b1 min mm	d2 mm	d3 mm	L max mm	L1 max mm	L2 max mm	h2 max mm	T max mm	F mm	Q min kN/LBF
P100F11	100.0	12.0	32.0	8.6	6.0	8.5	22.0	53.0	22.0	16.0	2.5	20.0	20.0/4545

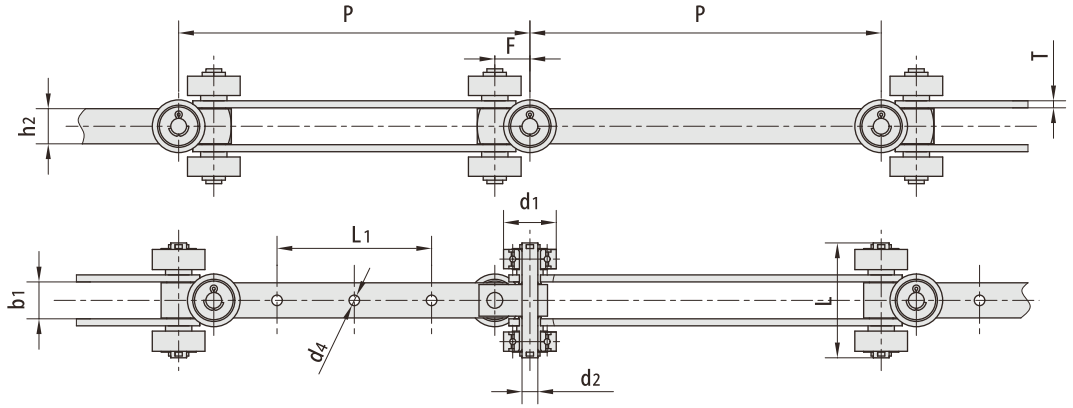

RBL chain number	Pitch	Roller diameter	Width between inner plates	Pin diameter	Pin length	plate dinension		Atlachment dinension			Tensile strength
	P mm	d1 max mm	b1 min mm	d2 max mm	L max mm	h2 max mm	T max mm	L1 mm	d4 mm	F mm	Q min kN/LBF
SJ40040	200.0	30.0	20.0	9.0	65.0	20.0	3.0	88.0	6.44	20.0	15.0/3374
SJ40060	200.0	35.0	21.0	10.0	64.5	20.0	4.0	88.0	6.50	20.0	60.0/13497
SJ400100	200.0	40.0	26.0	14.0	75.0	30.0	4.0	88.0	10.00	25.0	100.0/22495
SJ400F1120	200.0	45.0	32.0	14.0	102.0	30.0	6.0	85.0	10.50	20.0	100.0/22495
SJ400F3120	200.0	45.0	31.0	14.0	102.0	30.0	6.0	85.0	10.50	20.0	100.0/22495
SJ405S60	203.2	47.0	30.0	14.0	95.0	30.0	4.0	76.2	8.40	16.5	50.0/11247
SJ405SF160	203.2	47.0	36.0	14.0	95.0	30.0	4.0	76.2	8.40	16.5	60.0/13497

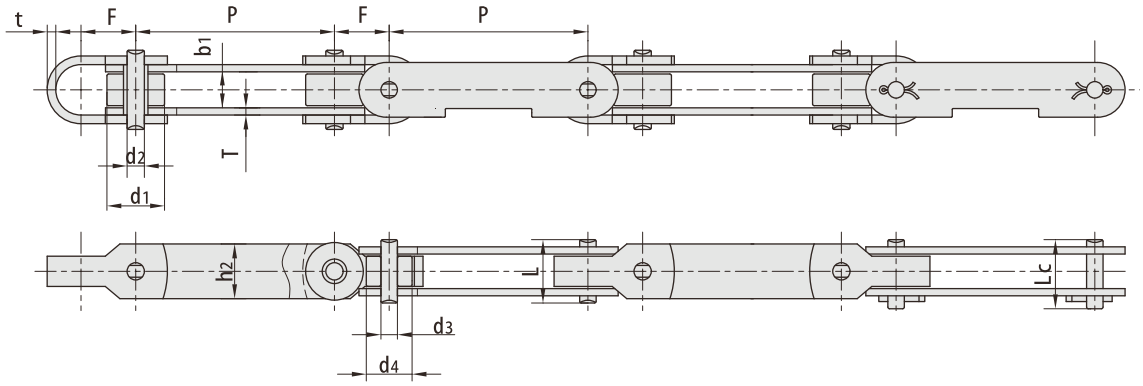

RBL chain number	Pitch	Roller diameter		Width between inner plates	Pin diameter		Pin length		plate dinension		Atlachment dinension		Tensile strength
	P mm	d1 max mm	d4 max mm	b1 min mm	d2 mm	d3 mm	L max mm	Lc max mm	h2 max mm	T max mm	F mm	t mm	Q min kN/LBF
P69F2	69.0	20.0	15.9	8.6	6.0	5.72	22.0	24.0	19.0	2.5	19.0	3.0	20.0/4545

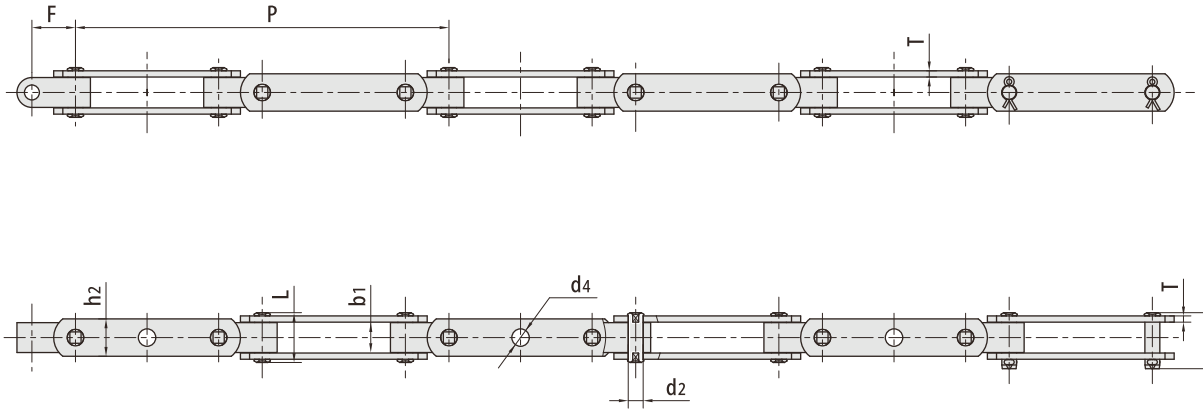

RBL chain number	Pitch	Width between inner plates	Pin diameter	Pin length		plate depth	Plate thickness	Atlachment dinension		Tensile strength	Average Tensile strength	Weight
	P mm	b1 min mm	d2 max mm	L max mm	Lc max mm	h2 max mm	T max mm	F mm	d4 mm	Q min kN/LBF	Qo kN	q kg/m
SJ250F3	250.0	24.6	12.0	40.0	45.0	30.0	5.0	35.0	14.0	90/20230	94.0	4.41
SJ250F4	250.0	31.0	16.0	48.0	53.0	35.0	6.0	35.0	18.0	150/33720	160.0	6.90
SJ266.66	266.66	25.0	12.0	40.0	45.0	30.0	5.0	35.0	14.0	100/22480	105.0	4.28
SJ280	280.0	31.0	16.0	-	60.7	40.0	6.0	40.0	16.0	112/25177	117.6	7.00
SJ300F3	300.0	24.6	12.0	40.0	45.0	30.0	5.0	35.0	14.0	90/20230	94.0	4.02
SJ300F4	300.0	31.0	16.0	48.0	53.0	35.0	6.0	35.0	18.0	150/33720	160.0	6.22

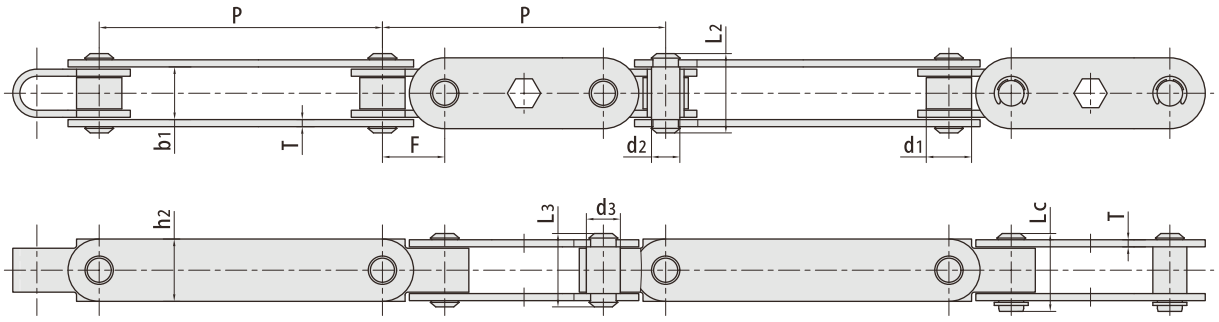

RBL chain number	Pitch	Roller diameter	Width between inner plates	Pin diameter		Pin length			plate dinension		Atlachment dinension	Tensile strength
	P mm	d1 max mm	b1 min mm	d2 max mm	d3 max mm	L2 max mm	L3 max mm	Lc max mm	h2 max mm	T max mm	F mm	Q min kN/LBF
SJ240F1	120.0	16.0	18.6	10.0	12.0	28.0	25.9	27.5	22.0	2.5	22.0	30.0/6744

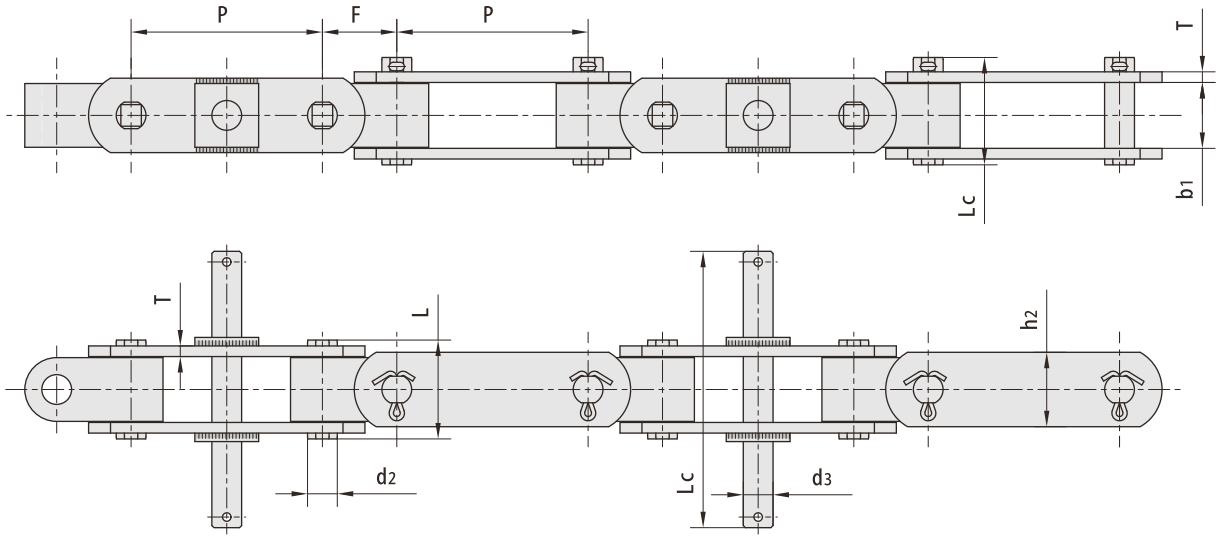

RBL chain number	Pitch	Width between inner plates	Pin diameter		Pin length			plate dinension		Atlachment dinension	Tensile strength
	P mm	b1 min mm	d2 max mm	d3 max mm	L max mm	Lc max mm	L1 max mm	h2 max mm	T max mm	F mm	Q min kN/LBF
SJ250F6	90.0	31.0	14.0	14.0	46.5	50.5	130.0	35.0	5.0	35.0	100.0/22480
SJ300F9	115.0	31.0	16.0	18.0	48.0	53.0	130.0	35.0	6.0	35.0	125.0/28100

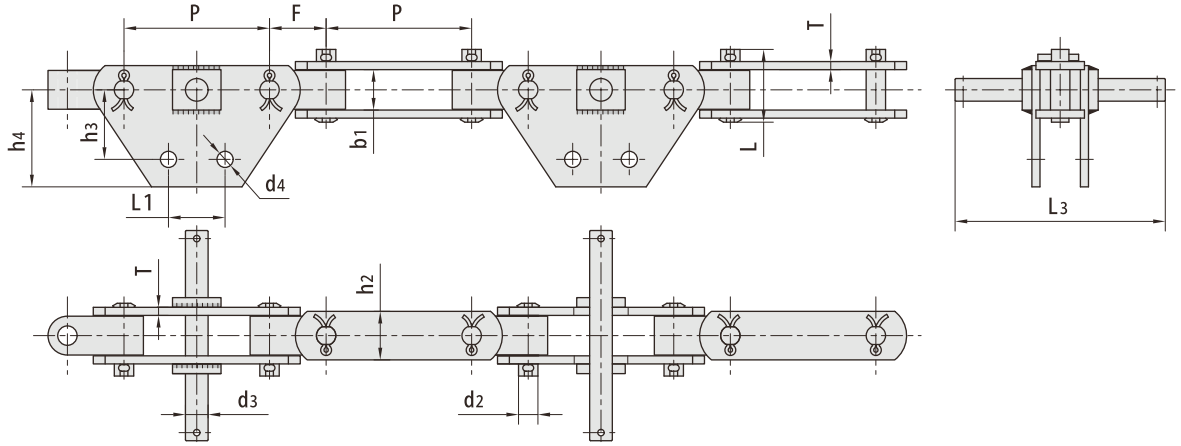

RBL chain number	Pitch	Width between inner plates	Pin diameter		Pin length		plate dinension		Atlachment dinension					Tensile strength
	P	b1 min	d2 max	d3 max	L max	L3 max	h2 max	T max	h3	h4	L1	d4	F	Q min
	mm	mm	mm	mm	mm	mm	mm	mm	mm	mm	mm	mm	mm	kN/LBF
SJ250F9	90.0	25.0	12.0	14.0	45.0	130.0	30.0	5.0	55.0	72.0	35.0	10.0	35.0	90.0/20232
SJ300F2	110.0	30.4	16.0	16.0	58.0	132.0	40.0	6.0	55.0	70.0	32.0	12.0	40.0	230.0/51704
SJ300F13	115.0	31.0	16.0	18.0	53.0	155.0	35.0	6.0	33.0	52.5	30.0	13.0	35.0	150.0/33720

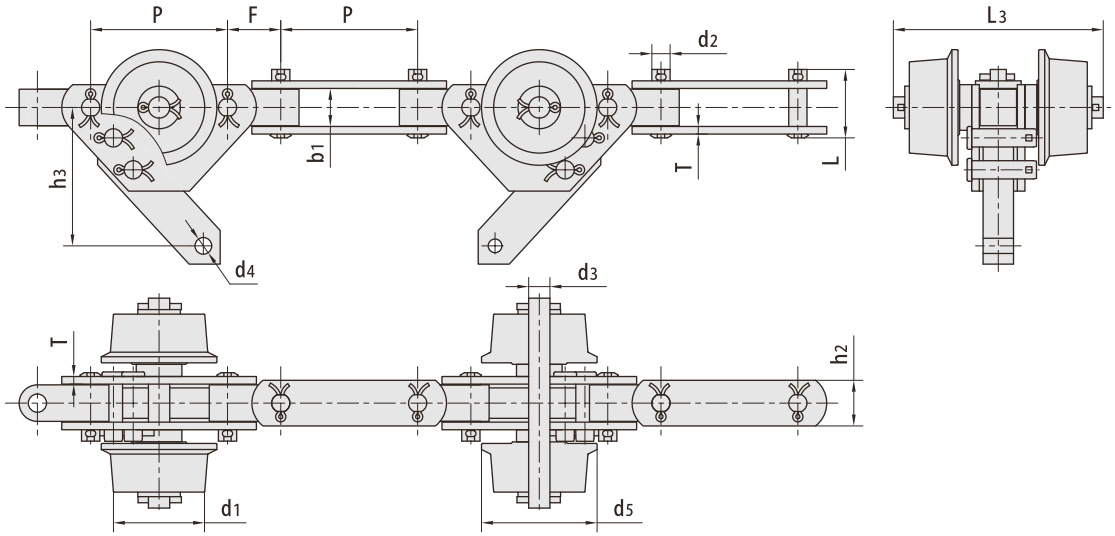

RBL chain number	Pitch	Pin diameter		Width between inner plates	Pin diameter		Pin length		plate dinension		Atlachment dinension			Tensile strength
	P	d1 max	d5 max	b1 min	d2 max	d3 max	L max	L3 max	h2 max	T max	h3	d4	F	Q min
	mm	mm	mm	mm	mm	mm	mm	mm	mm	mm	mm	mm	mm	kN/LBF
SJ250F11	90.0	60.0	76.0	25.0	12.0	14.0	45.0	138.0	30.0	5.0	35.0	10.0	35.0	90.0/20232

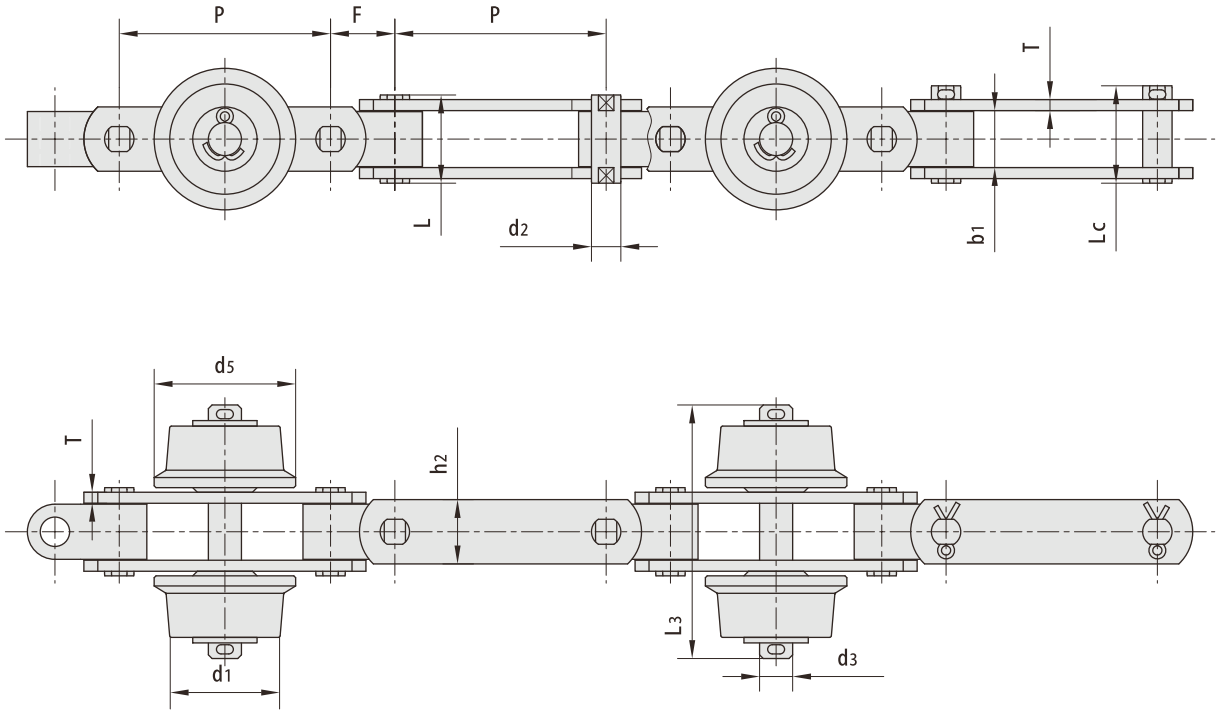

RBL chain number	Pitch	Pin diameter		Width between inner plates	Pin diameter		Pin length			plate dinension		Atlachment dinension	Tensile strength
	P	d1 max	d5 max	b1 min	d2 max	d3 max	L max	Lc max	L3 max	h2 max	T max	F	Q min
	mm	mm	mm	mm	mm	mm	mm	mm	mm	mm	mm	mm	kN/LBF
SJ250F7	90.0	60.0	77.0	25.0	12.0	14.0	-	45.0	135.0	30.0	5.0	35.0	50.0/11240
SJ300F8	115.0	60.0	77.0	31.0	16.0	18.0	48.0	53.0	138.0	35.0	6.0	35.0	150.0/33720

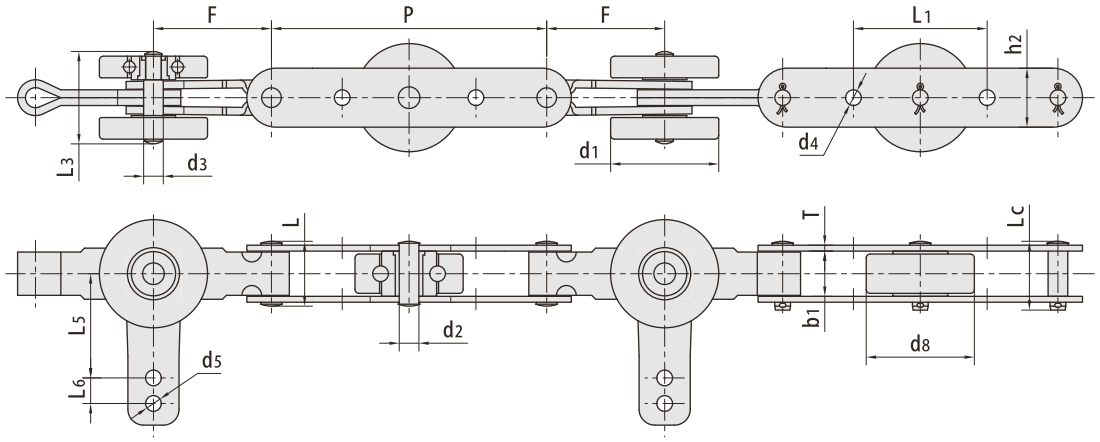

RBL chain number	Pitch	Pin diameter		Width between inner plates	Pin diameter		Pin length			plate dinension		Atlachment dinension						Tensile strength
	P mm	d1 max mm	d5 max mm	b1 min mm	d2 max mm	d3 max mm	L max mm	Lc max mm	L3 max mm	h2 max mm	T max mm	L1 mm	L5 mm	L6 mm	d4 mm	d5 mm	F mm	Q min kN/LBF
SJ184F1	111.3	55.0	46.0	23.0	10.0	10.0	38.0	-	45.5	25.6	4.0	68.8	53.7	12.2	7.9	7.7	36.35	20.0/4496
SJ200F5	130.0	55.0	48.0	23.0	10.0	10.0	36.0	37.0	45.0	25.0	4.0	70.0	53.0	13.0	8.0	8.0	35.00	35.0/7868
SJ300F14	180.0	55.0	55.0	23.0	10.0	10.0	33.0	35.0	43.0	30.0	3.0	68.0	53.0	13.0	8.0	8.0	60.00	20.0/4496

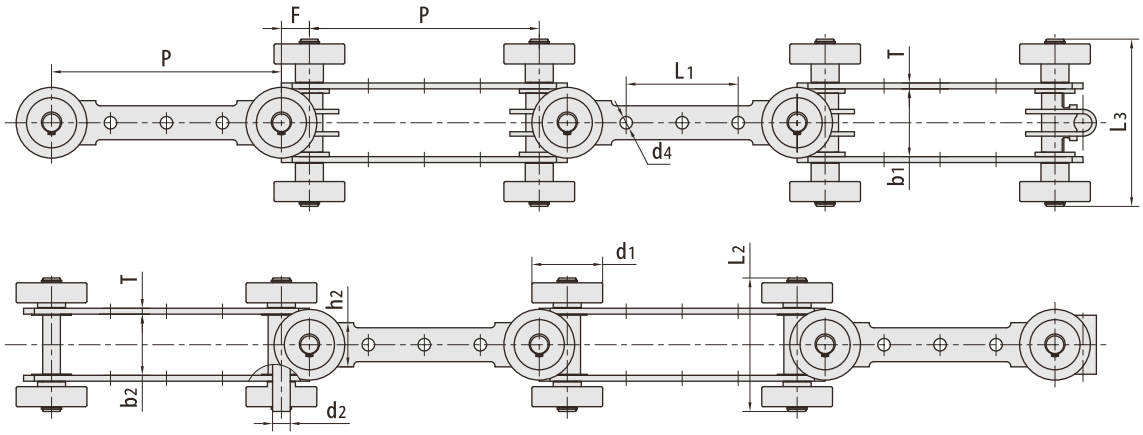

RBL chain number	Pitch	Pin diameter	Width between inner plates		Pin diameter	Pin length		plate dinension		Atlachment dinension			Tensile strength
	P mm	d1 max mm	b1 min mm	b2 min mm	d2 max mm	L2 max mm	L3 max mm	h2 max mm	T max mm	L1 mm	d4 mm	F mm	Q min kN/LBF
SJ350	156.0	48.0	46.0	43.0	12.0	91.0	112.5	30.0	4.0	76.0	8.5	19.0	40.0/8992

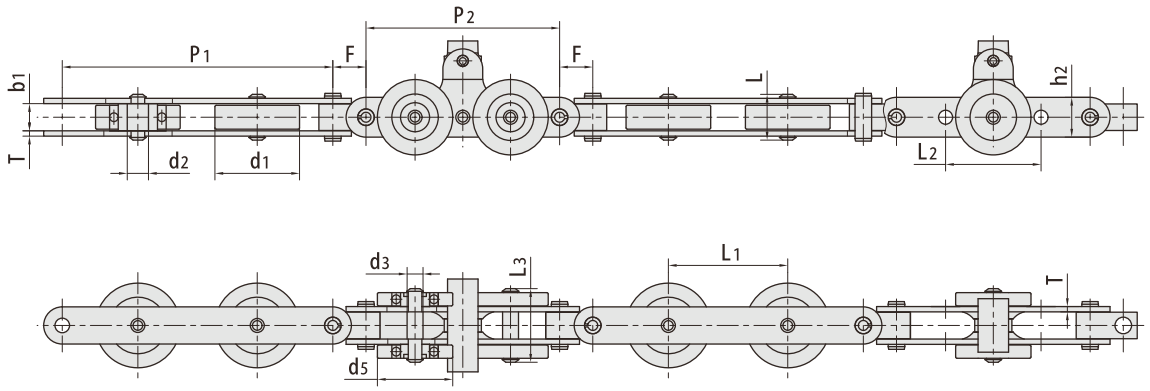

RBL chain number	Pitch		Pin diameter		Width between inner plates	Pin diameter		Pin length		plate dinension		Atlachment dinension			Tensile strength
	P1 mm	P2 mm	d1 max mm	d5 max mm	b1 min mm	d2 max mm	d3 max mm	L max mm	L3 max mm	h2 max mm	T max mm	L1 mm	L2 mm	F mm	Q min kN/LBF
SJ500F4	204.0	146.0	63.8	56.8	20.5	16.0	12.0	34.5	50.5	30.0	4.0	90.0	72.0	25.0	50.0/11240
SJ500F2	304.0	146.0	63.8	56.8	20.5	16.0	12.0	34.5	50.5	30.0	4.0	210.0	72.0	25.0	50.0/11240

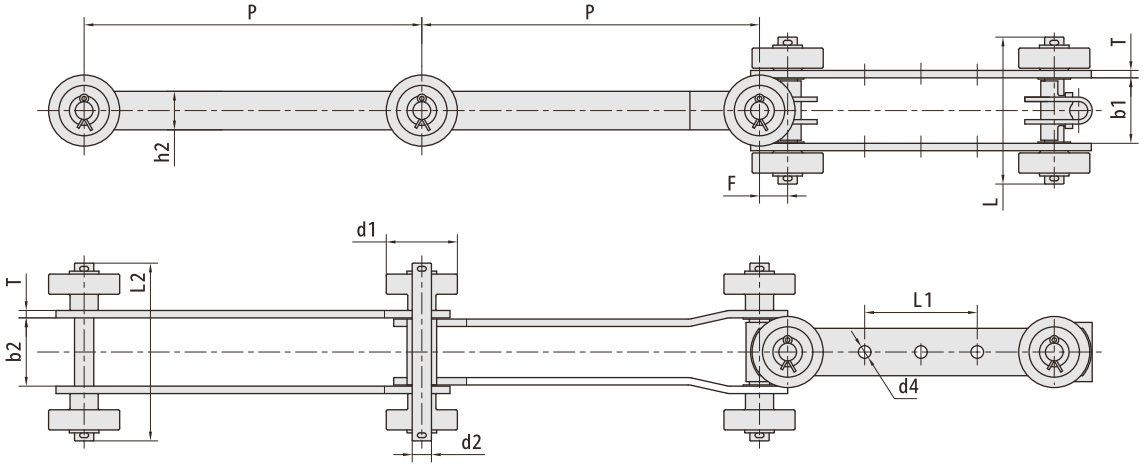

RBL chain number	Pitch	Pin diameter	Width between inner plates		Pin diameter	Pin length		plate dinension		Atlachment dinension			Tensile strength
	P mm	d1 max mm	b1 min mm	b2 min mm	d2 max mm	L2 max mm	L3 max mm	h2 max mm	T max mm	L1 mm	d4 mm	F mm	Q min kN/LBF
SJ685.8F1	228.6	48.0	43.0	46.0	12.7	96.0	120.0	26.0	5.0	76.0	8.5	16.5	40.0/8992

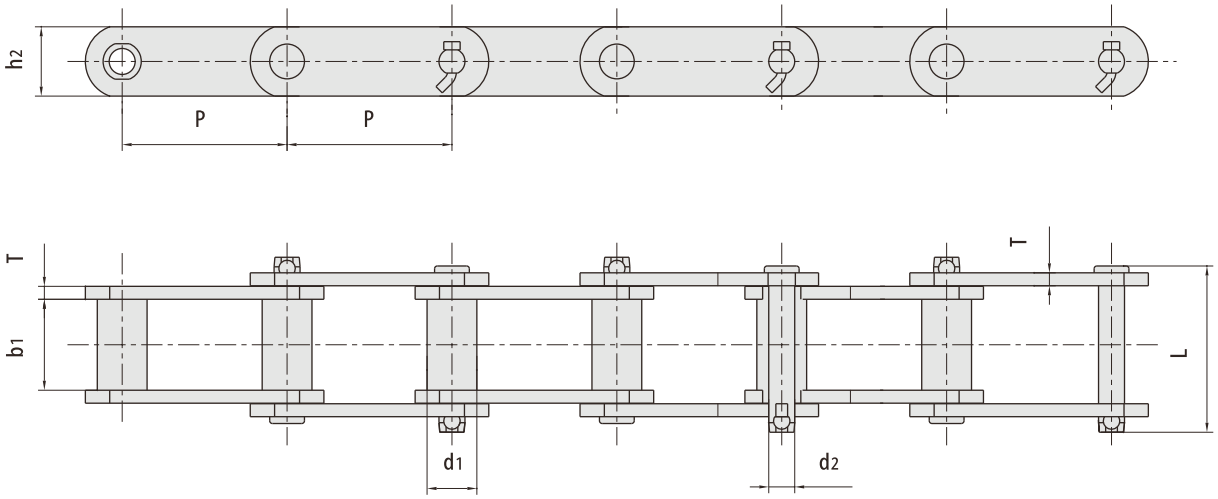

ANSI chain number	RBL chain number	Pitch P mm	Bush diameter d1 max mm	Width between inner plates b1 min mm	Pin diameter d2 max mm	Pin length L max mm	plate depth h2 max mm	Plate thickness T max mm	Tensile strength Q min kN/LBF	Average Tensile strength Qo kN	Weight q kg/m
S102B		101.60	25.40	54.10	15.88	111.3	38.10	9.7	160.0/35993	176.0	10.40
S110		152.40	32.00	54.10	15.88	111.3	38.10	9.7	160.0/35993	176.0	9.80
S111		120.90	36.60	66.80	19.05	131.2	50.80	9.7	214.0/48141	235.4	15.90
S131		78.11	32.00	33.50	15.88	90.5	38.10	9.7	160.0/35993	176.0	11.60
S150		153.67	44.70	84.30	25.40	164.6	63.50	12.7	378.0765034	416.0	25.70
S188		66.27	22.40	26.90	12.70	68.6	28.40	6.4	102.0/22946	112.2	5.60
S856		152.40	44.40	76.20	25.40	154.9	63.50	12.7	365.0/62110	401.5	25.00
S857		152.40	44.40	76.20	25.40	154.9	82.60	12.7	432.0/97182	475.2	32.00
S859		152.40	60.40	95.30	31.75	188.5	101.60	16.0	690.0/155221	759.0	55.90
S864		177.80	60.40	95.30	31.75	188.5	101.60	16.0	690.0/155221	759.0	51.80
	S102.5	102.36	34.93	57.15	19.05	115.0	44.45	9.5	214.0/48141	235.4	14.09
	S110F1	152.40	31.75	53.48	15.88	111.0	44.45	9.5	160.0/35993	176.0	10.50
	S111F1	120.90	36.51	66.68	19.05	125.0	50.80	9.5	214.0/48141	235.4	15.46
	S150F1	153.67	44.50	80.60	28.60	152.0	80.00	12.0	900.0/202328	990.0	29.87

A-1

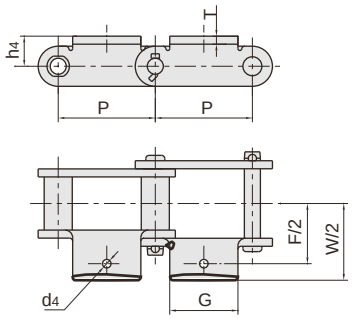

K-1

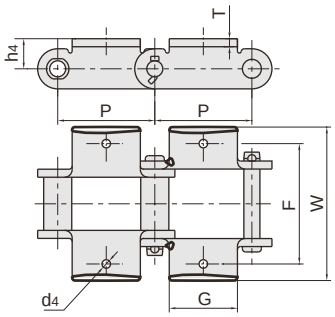

ANSI chain number	P mm	G mm	F mm	W mm	h4 mm	d4 mm	T mm
*S102B	101.60	77.0	121.0	180.8	25.4	10.2	9.7
S131	78.11	73.9	104.6	157.0	25.4	13.5	9.7
S188	66.27	54.6	95.2	131.6	20.6	10.2	6.4

*S102B only with A-1 attachments

A-2

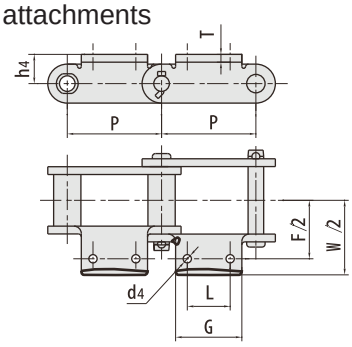

K-2

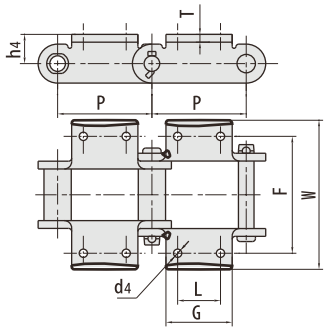

ANSI chain number	RBL chain number	P mm	L mm	G max mm	F mm	W max mm	h4 mm	d4 min mm	T mm
S102B		101.60	44.50	69.9	134.90	180.80	25.40	10.20	9.7
S110		152.40	44.50	89.6	134.90	180.80	25.40	10.20	9.7
S111		120.90	58.70	92.7	158.80	210.80	38.10	13.50	9.7
S131		78.11	38.10	73.9	104.60	157.00	25.40	13.50	9.7
S150		153.67	69.90	108.7	190.50	249.40	47.80	13.50	12.7
S188		66.27	31.80	54.6	106.40	131.60	20.60	8.60	6.4
S856		152.40	63.50	103.1	184.20	241.30	47.80	16.80	12.7
	S 102.5	102.36	44.45	69.0	136.53	163.51	28.58	9.50	9.5
	S110F1	152.40	44.45	88.9	134.94	165.10	27.78	10.30	9.5
	S111F1	120.90	58.70	87.5	158.75	196.85	38.10	13.70	9.5
	S102.5A2F1	102.36	44.45	80.0	134.60	172.00	28.58	14.50	9.5
	S856F3	152.40	57.15	108.0	160.30	215.90	47.80	13.49	12.7
	S110F3	152.40	44.50	76.2	134.90	161.00	25.40	10.20	9.7
	S188F6	66.27	31.75	54.6	105.20	129.30	22.30	11.11	6.4
	S856F5	152.40	63.50	180.0	184.15	241.00	12.70	18.00	12.7

A-22

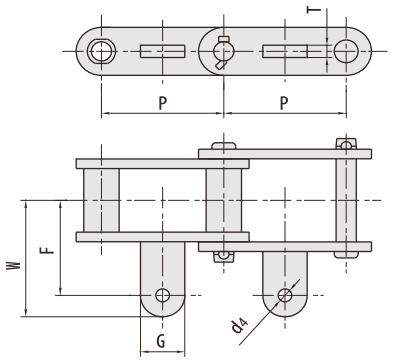

ANSI chain number	RBL chain number	P mm	G mm	F mm	W mm	d4 mm	T mm
S188		66.27	49.2	45.2	61.2	10.2	10.4
	S188A22F1	66.27	32.0	45.2	61.2	12.0	6.4

K-3

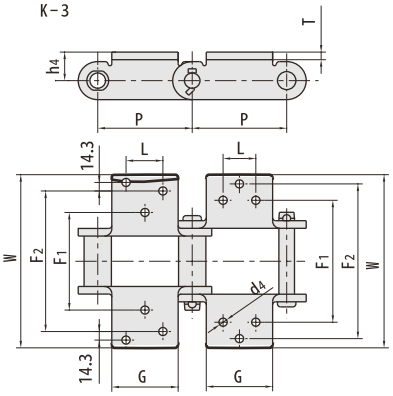

ANSI chain number	P mm	G mm	L mm	F1 mm	F2 mm	W mm	h4 mm	d4 mm	T mm
S150	153.67	109.5	69.9	190.5	292.1	347.5	47.8	13.5	13.5
S856	152.40	152.4	69.9	166.6	277.9	349.3	47.8	13.5	13.5

K-35

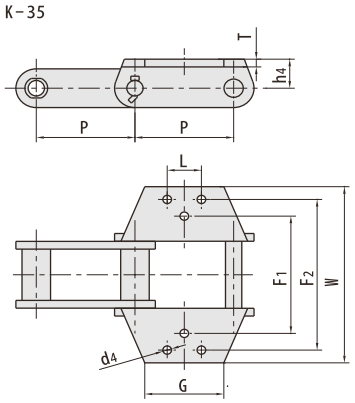

ANSI chain number	P mm	G mm	L mm	F1 mm	F2 mm	W mm	h4 mm	d4 mm	T mm
S856	152.4	90.00	63.50	184.2	298.50	349.30	47.8	16.80	13.50
S102BF3K2	101.6	101.00	44.50	-	132.00	164.00	38.1	11.00	10.00
S111F2K2	120.9	120.65	58.67	-	158.74	195.33	38.1	14.23	9.65
S856F8K3	152.4	90.00	64.00	199.5	314.00	355.00	71.0	17.00	16.00

K-35

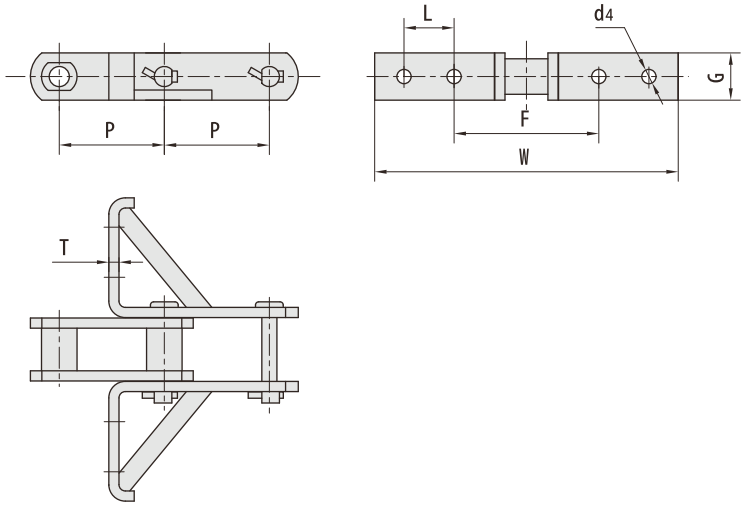

ANSI chain number	P mm	G mm	L mm	F mm	W mm	d4 mm	T mm
S188F8	66.27	29.8	31.6	92.5	192	9.1	6.4

K-44

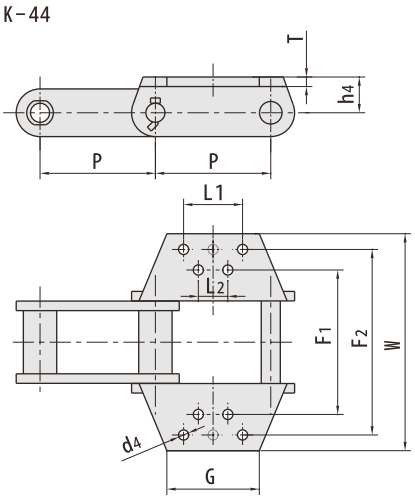

ANSI chain number	P mm	G mm	L1 mm	L2 mm	F1 mm	F2 mm	W mm	h4 mm	d4 mm	T mm
S857	152.4	146.1	88.9	88.9	177.8	304.8	355.6	63.5	13.5	13.5
S859	152.4	146.1	114.3	69.9	228.6	330.2	381.0	76.2	16.8	13.5
S864	177.8	146.1	139.7	95.3	228.6	330.2	381.0	76.2	16.8	13.5

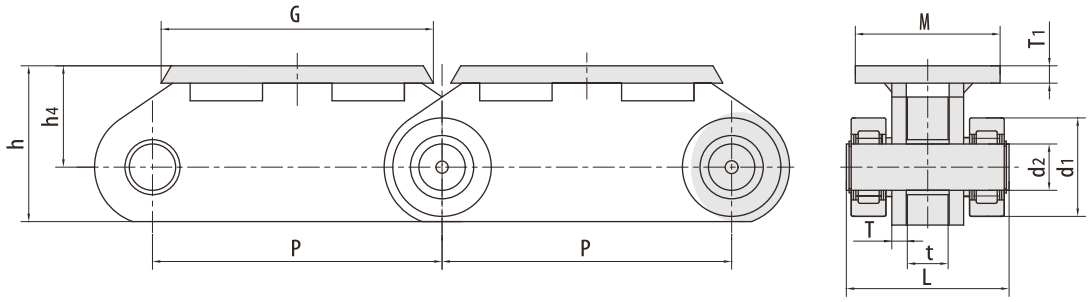

RBL chain number	Pitch P mm	Roller diameter d1 max mm	Pin diameter d2 max mm	Pin length L max mm	plate thickness t/T max mm	Atlachment dinension G mm	M mm	h4 mm	h mm	T1 mm	Tensile strength Q min kN/LBF
P500	500.0	170.0	80.0	281.0	50.0/25.0	470.0	250.0	175.0	269.0	30.0	1900A27419
P500F2300	500.0	170.0	80.0	261.0	60.0/20.0	470.0	250.0	155.0	240.0	30.0	1600/359680

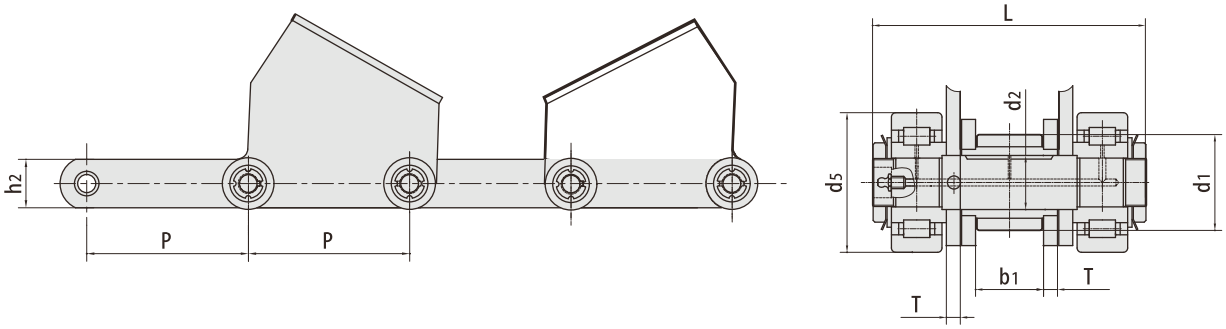

RBL chain number	Pitch P mm	Roller diameter d1 max mm	Roller diameter d5 max mm	Width between inner plates b1 min mm	Pin diameter d2 max mm	Pin length L max mm	plate thickness T max mm	plate depth h2 mm	Tensile strength Q min kN/LBF
P250F168	250.0	107.0	160.0	78.0	62.0	330.0	16.0	150.0	1000/224800
P500F1	500.0	107.0	160.0	78.0	62.0	325.0	20.0	150.0	800/179966
P500F2	500.0	107.0	160.0	76.0	62.0	310.0	16.0	150.0	700/157470
P500F18	500.0	107.0	160.0	78.0	62.0	310.0	16.0	150.0	1000/224800

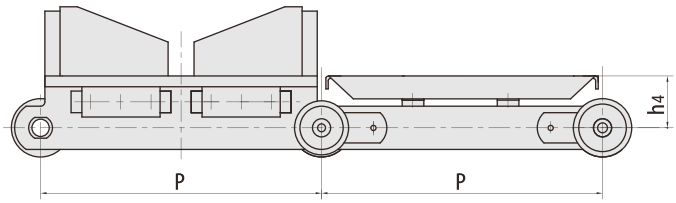

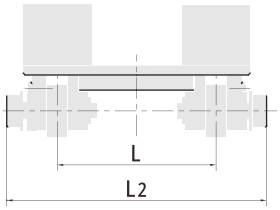

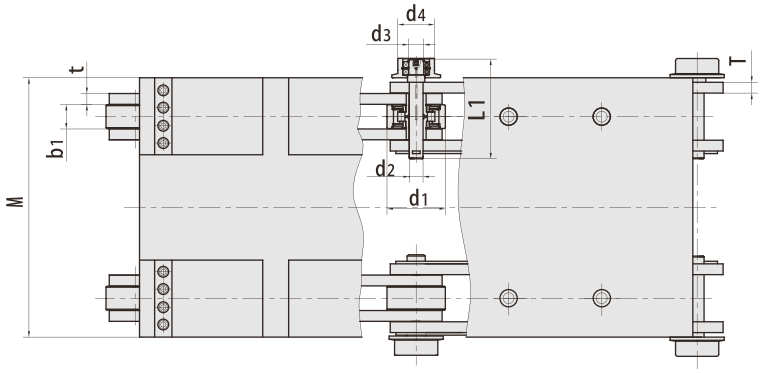

RBL chain number	Pitch	Roller diameter		Width between inner plates	Pin diameter		Pin length	plate thickness	Atlachment dinension				Tensile strength	Weight
	P mm	d1 max mm	d5 max mm	b1 min mm	d2 max mm	d3 max mm	L1 max mm	t/T max mm	L mm	L2 mm	M mm	h4 mm	Q min kN/LBF	q kg/m
P650	650.0	135.0	85.0	56.0	32.0	35.0	232.0	25.0	420.0	690.0	600.0	120.0	750/168718	214.5
P750	750.0	200.0	85.0	82.0	55.0	35.0	276.0	30.0/25.0	380.0	690.0	600.0	162.5	2050/460858	-

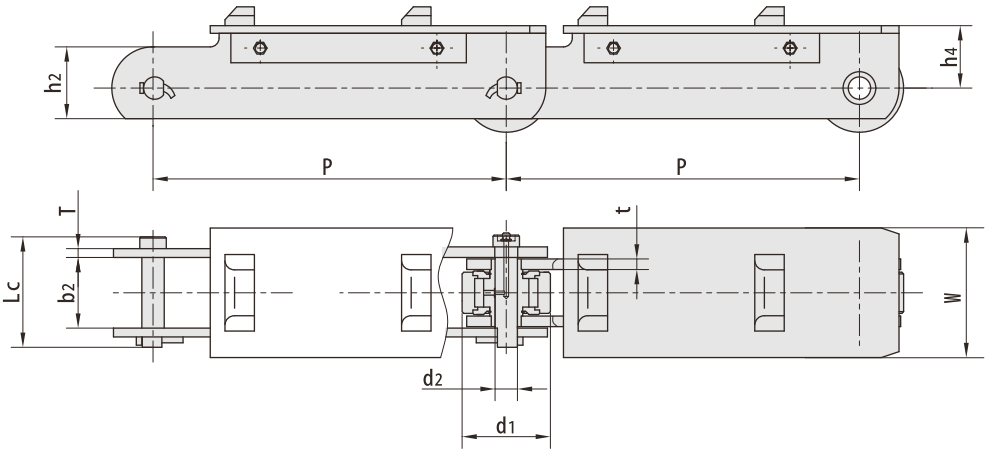

RBL chain number	Pitch P mm	Roller diameter d1 max mm	Width between inner plates b1 mm	Pin diameter d2 max mm	Pin length Lc max mm	plate depth h2 mm	plate thickness t/T max mm	Atlachment dinension h4 mm	Atlachment dinension W mm	Average Tensile strength Qo kN/LBF
P600F1	600.0	150.0	117.0	38.0	187.0	122.0	18/15	105.7	220.0	1470/330687

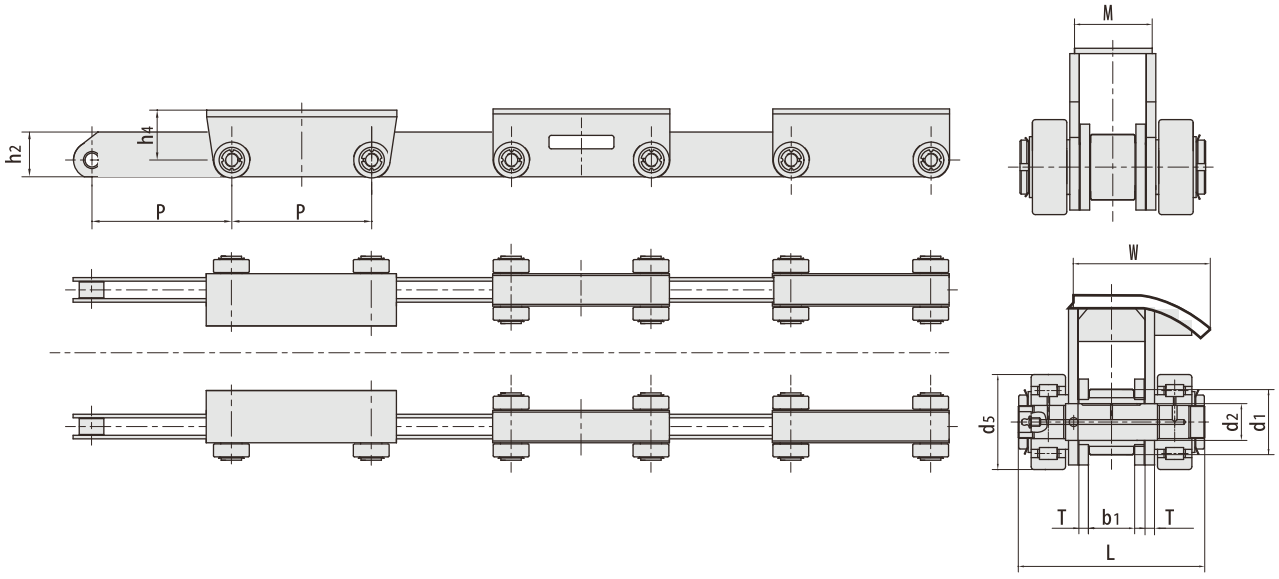

RBL chain number	Pitch P mm	Roller diameter d1 max mm	Roller diameter d5 max mm	Width between inner plates b1 mm	Pin diameter d2 max mm	Pin length L max mm	plate thickness T max mm	Atlachment dinension W mm	Atlachment dinension M mm	Atlachment dinension h2 mm	Atlachment dinension h4 mm	Tensile strength Q min kN/LBF
P1000	250.0	107.0	160.0	78.0	62.0	310.0	16.0	227.5	130.0	200.0	215.0	1800/404923

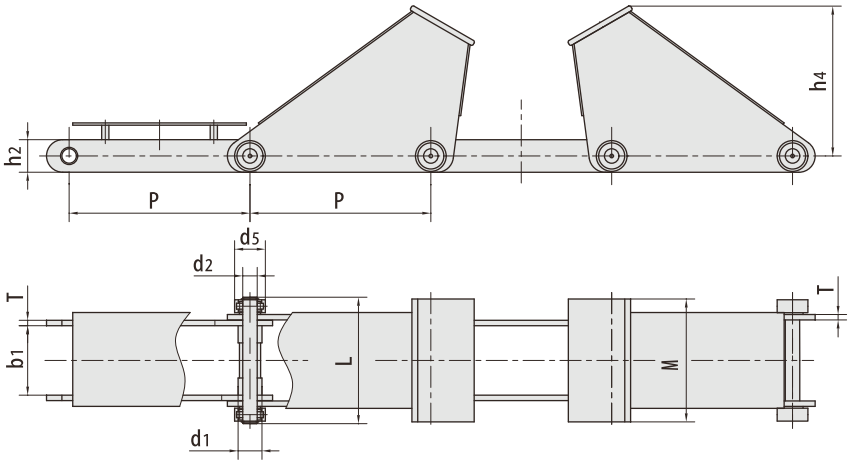

RBL chain number	Pitch	Roller diameter		Width between inner plates	Pin diameter	plate depth	Pin length	plate thickness	Atlachment dinension		Tensile strength
	P mm	d1 max mm	d5 max mm	b1 mm	d2 max mm	h2 mm	L max mm	T max mm	h4 mm	M mm	Q min kN/LBF
P1000	1000.0	110.0	170.0	384.0	80.0	180.0	678.0	30.9	832.0	680.0	1800/404923

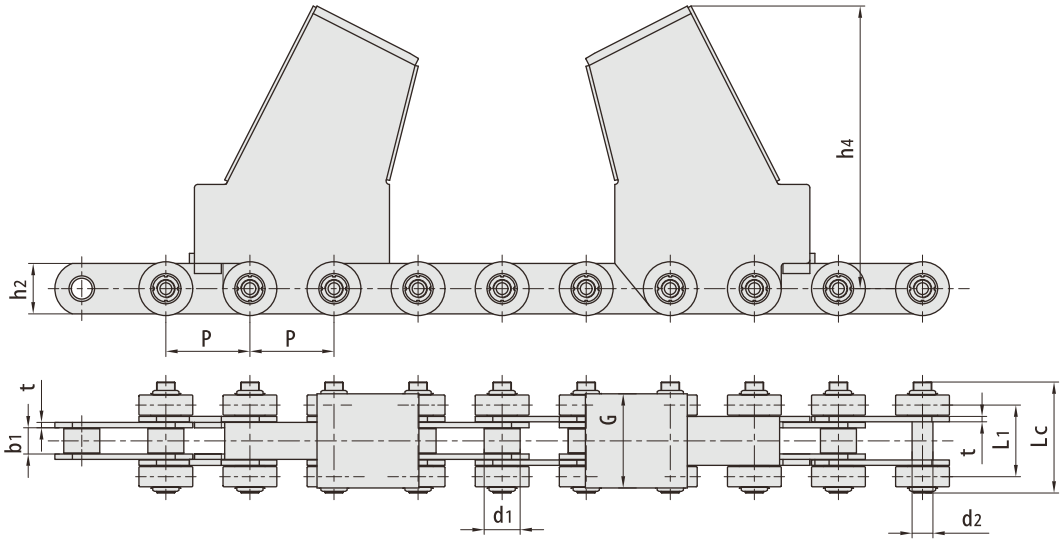

RBL chain number	Pitch	Roller diameter	Width between inner plates	Pin diameter	Pin length	plate thickness	Inner Plate depth	Atlachment dinension			Tensile strength	Weight
	P mm	d1 max mm	b1 mm	d2 max mm	L max mm	t mm	h2 max mm	h4 mm	L1 mm	G mm	Q min kN/LBF	q kg/m
P250F168	250.0	107.0	78.0	62.0	330.0	16.0	150.0	840.4	213.0	280.0	1000/224800	270.5

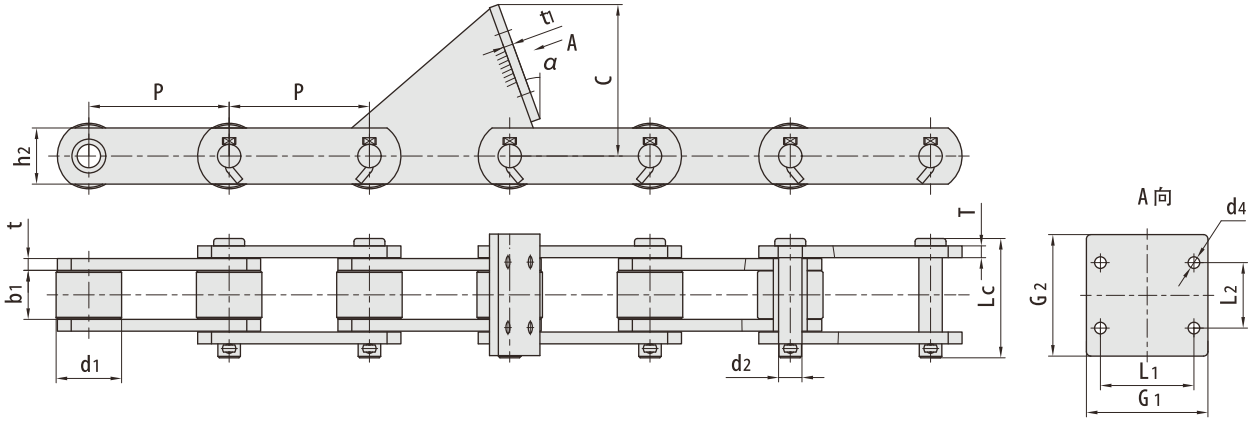

RBL chain number	Pitch P mm	Roller diameter d1 max mm	Width between inner plates b1 mm	Pin diameter d2 max mm	Pin length Lc max mm	Inner Plate depth h2 max mm	plate thickness t/T mm	Tensile strength Q min kN/LBF	Weight q kg/m
P95.25F1	95.25	44.45	33.30	15.88	81.00	38.10	8.00	180.0/40464	13.63

RBL chain number	P mm	C mm	d1 mm	t1 mm	L1 mm	G1 mm	L2 mm	G2 mm	a mm
P95.25F1	95.25	102.85	7.90	6.40	63.50	82.50	44.45	82.50	20°

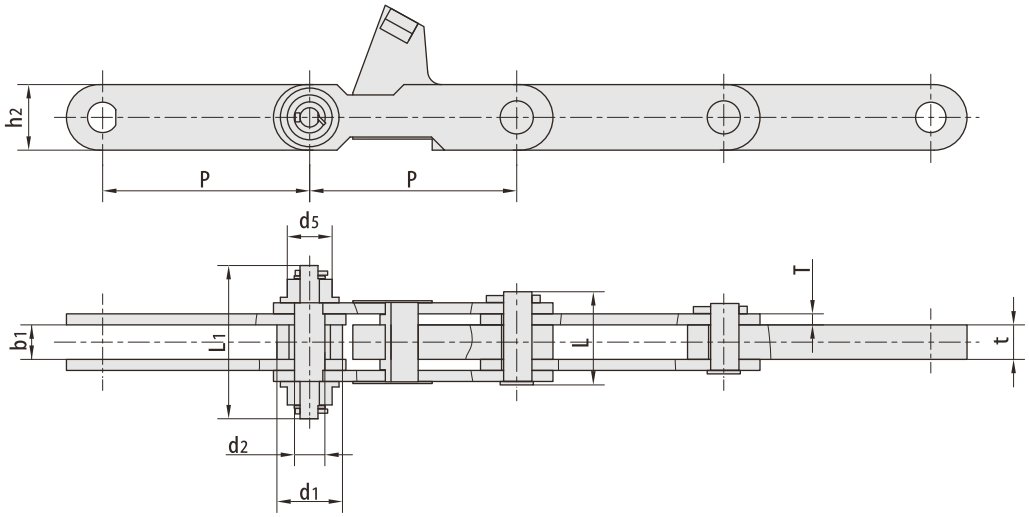

RBL chain number	Pitch P mm	Roller diameter d1 max mm	 d5 max mm	Width between inner plates b1 mm	Pin diameter d2 max mm	Pin length L max mm	 L1 max mm	plate thickness t/T max mm	Tensile strength Q min kN/LBF
P300F5	300.0	95.0	65.0	50.0	44.0	135.0	222.0	50.0/16.0	500.0/112478.0

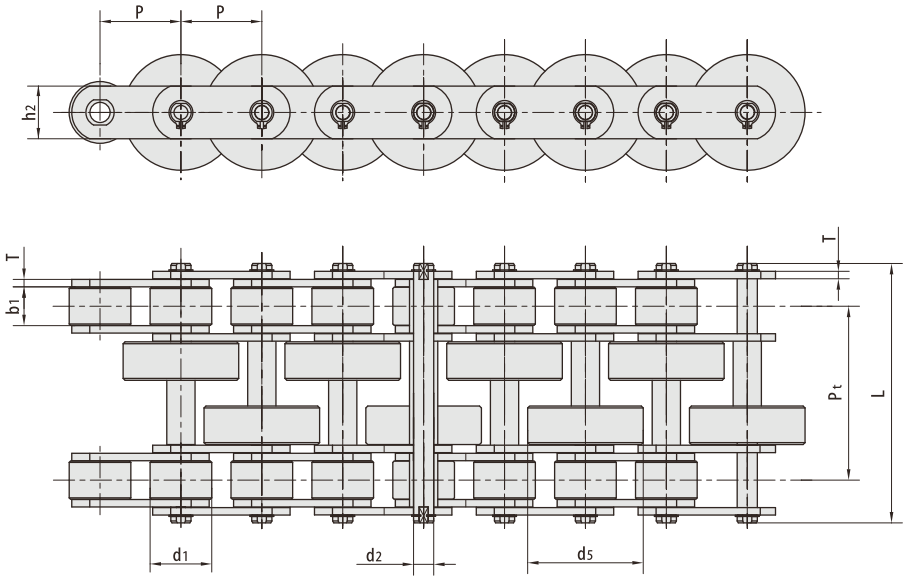

RBL chain number	Pitch	Roller diameter		Width between inner plates	Pin diameter	Pin length	plate thickness	Plate depth	Transverse pitch	Tensile strength	Weight
	P mm	d1 max mm	d5 max mm	b1 mm	d2 max mm	L max mm	T max mm	h2 max mm	Pt mm	Q min kN/LBF	q kg/m
P45F8	45.0	36.0	69.0	18.0	12.0	128.0	4	30.0	108.0	160/35968	25.70
P63F4	63.0	48.0	90.0	30.0	15.88	202.0	6	41.0	135.0	200/44991	36.57
P100F3162	100.0	60.0	140.0	39.0	22.0	256.0	8	50.0	160.0	450/101160	84.10

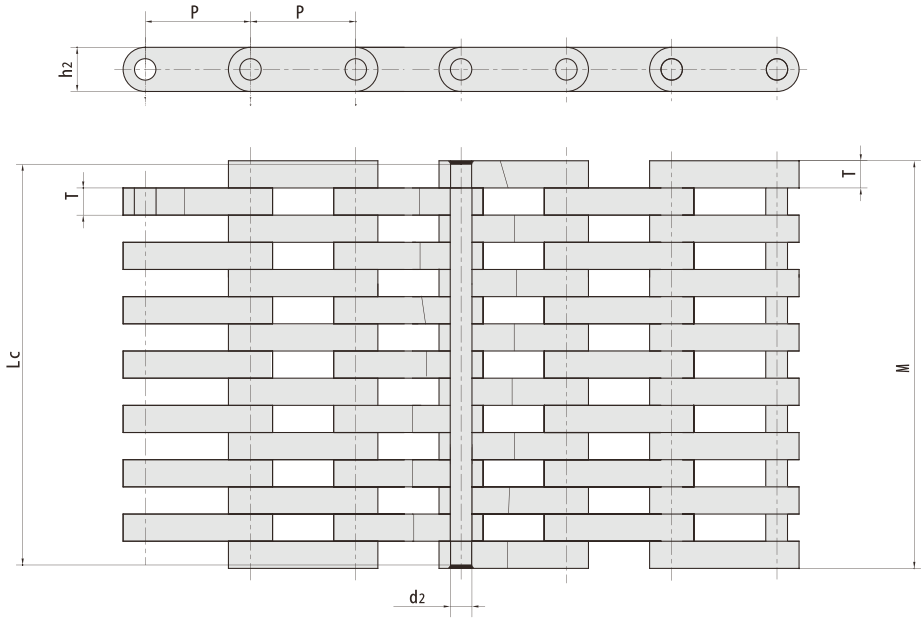

RBL chain number	Pitch P mm	Plate lacing	Pin diameter d2 max mm	Pin length Lc max mm	plate thickness T max mm	Plate dimension h2 mm	Plate dimension M mm	Tensile strength Q min kN/LBF	Average Tensile strength Qo kN	Weight q kg/m
LF152F1	152.0	6x5	26.92	279.4	25.4	50.8	283.2	2000/449600	2200/494560	70.0
LF155	155.0	7x8	31.5	595.0	40.0	65.0	605.0	3200/719864	3520/791851	202.2

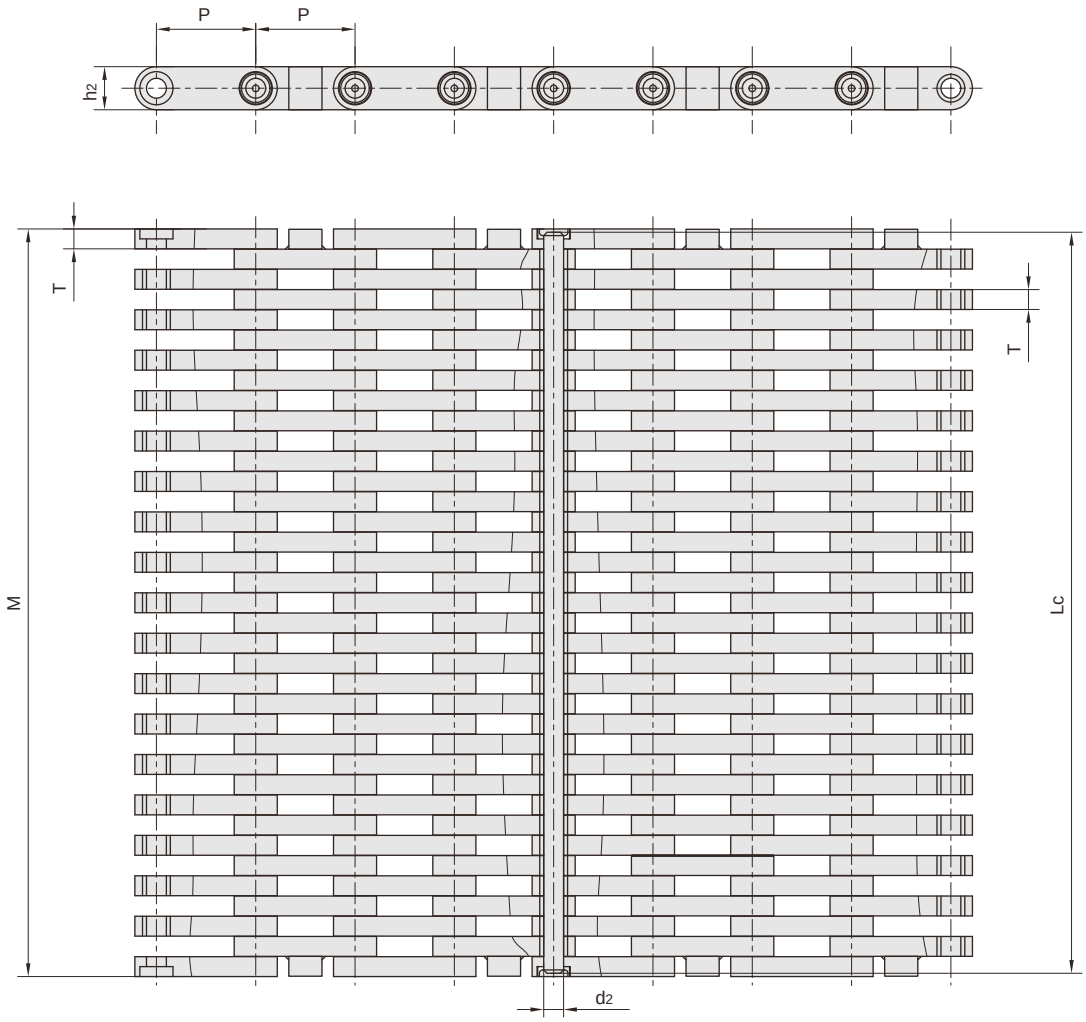

RBL chain number	Pitch P mm	Plate lacing	Pin diameter d2 max mm	Pin length Lc max mm	plate thickness T max mm	Plate dimension h2 mm	Plate dimension M mm	Tensile strength Q min kN/LBF	Average Tensile strength Qo kN	Weight q kg/m
LF150F1	150.0	18X19	30.0	1117.0	30.0	65.0	1119.0	5200/1169000	5700.0	365.0

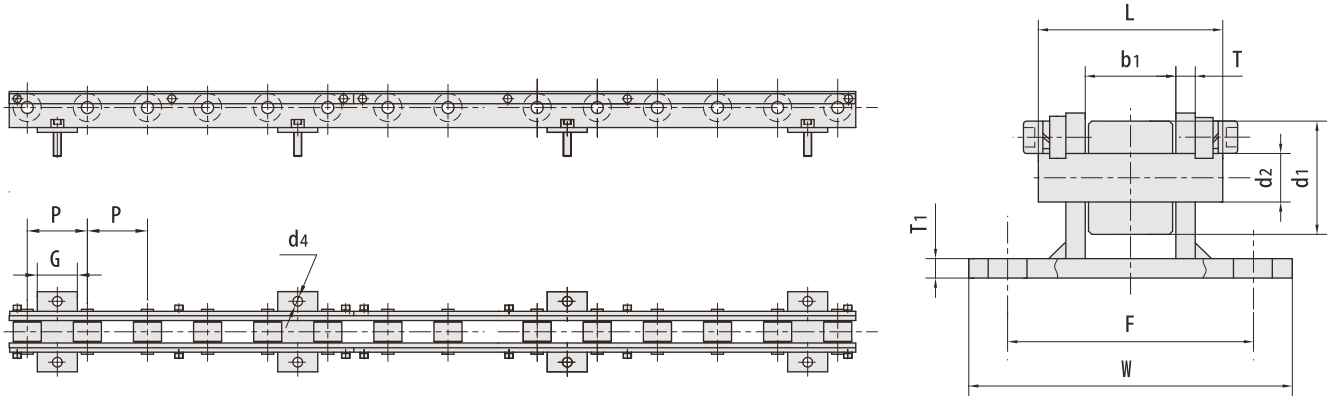

RBL chain number	Pitch	Roller diameter	Width between inner plates	Pin diameter	Pin length	plate thickness	Atlachment dinension					Tensile strength
	P mm	d1 max mm	b1 mm	d2 max mm	L max mm	T max mm	T1 mm	W mm	F mm	d4 mm	G mm	Q min kN/LBF
P75F9	75.0	35.0	28.0	15.0	56.0	6.0	6.0	100.0	76.0	12.0	50.0	22.3

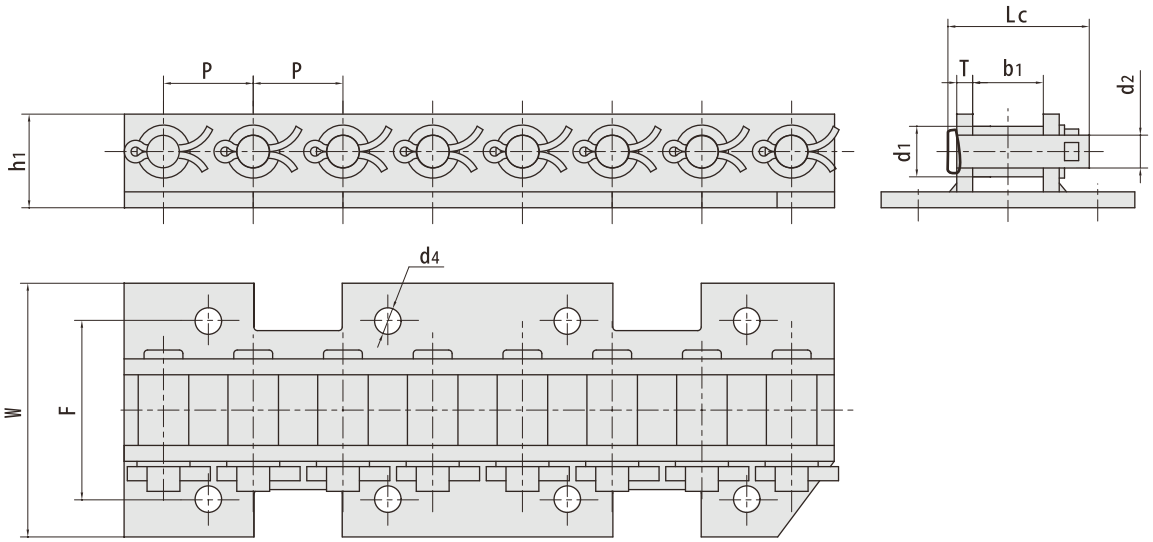

RBL chain number	Pitch	Roller diameter	Width between inner plates	Pin diameter	Pin length	plate thickness	Atlachment dinension				Tensile strength	Weight
	P mm	d1 max mm	b1 mm	d2 max mm	Lc max mm	T max mm	F mm	W mm	d4 mm	h1 mm	Q min kN/LBF	q kg/m
P50.8F10	50.8	28.6	40.0	18.5	80.0	9.0	101.6	143.6	15.0	53.0	193/43416	11.2

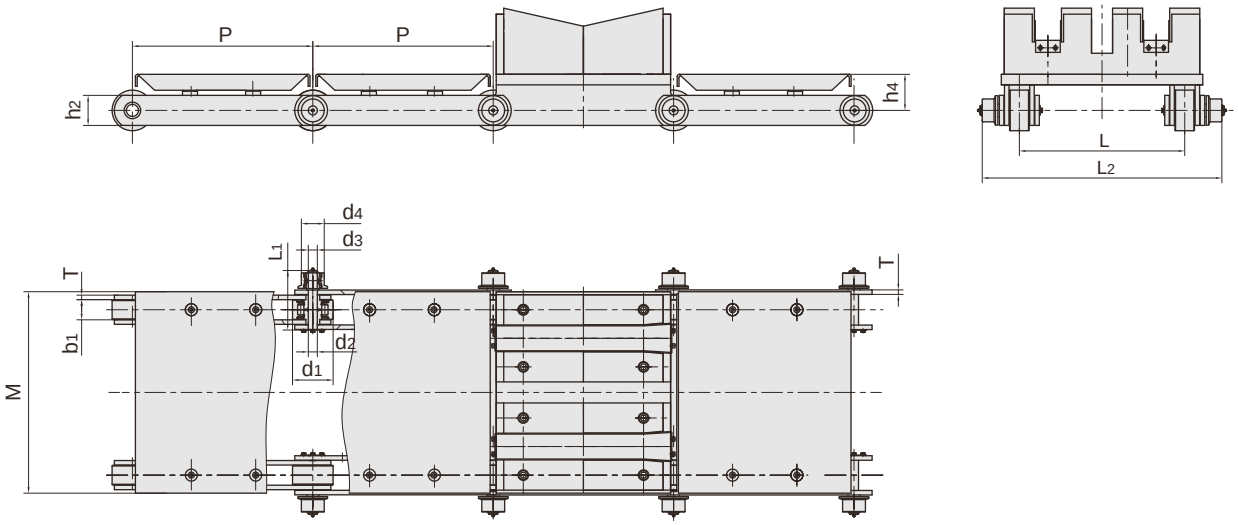

RBL chain number	Pitch	Roller diameter		Width between inner plates	Pin diameter		Pin length	Plate dimension		Atlachment dinension				Tensile strength
	P mm	d1 max mm	d4 mm	b1 mm	d2 max mm	d3 max mm	Lc max mm	h2 mm	T max mm	F mm	W mm	d4 mm	h1 mm	Q min kN/LBF
P600F3	600.0	135.0	76.0	68.0	30.0	30.0	200.3	100.0	15.0	550.0	794.0	670.0	120.0	1000.0/224809.0

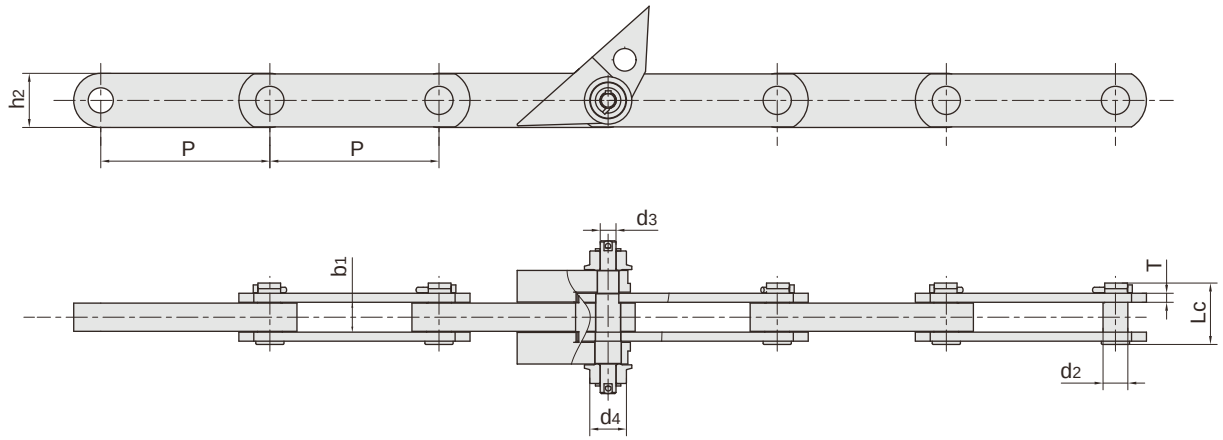

RBL chain number	Pitch	Roller diameter	Width between inner plates	Pin diameter		Pin length	Plate dimension		Tensile strength
	P mm	d1 max mm	b1 mm	d2 max mm	d3 max mm	Lc max mm	h2 mm	T max mm	Q min kN/LBF
P300F7	300.0	65.0	53.0	44.0	28.0	108.9	96.0	16.0	500.0/112404.0

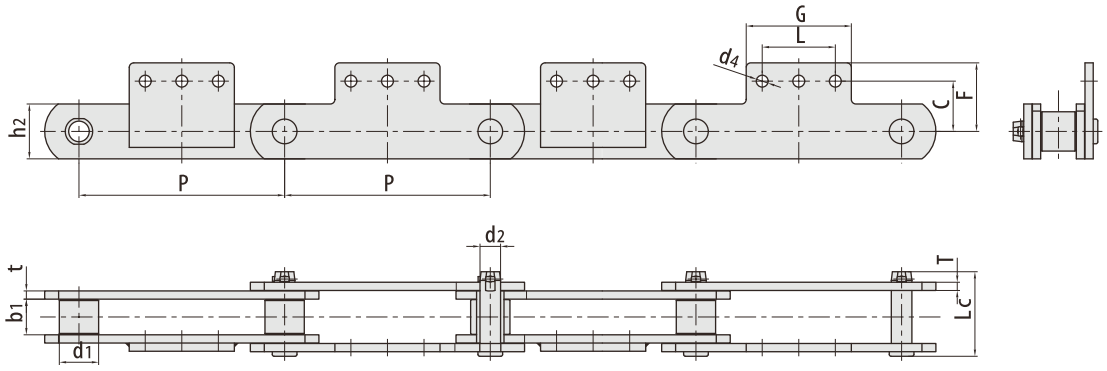

RBL chain number	Pitch	Roller diameter	Width between inner plates	Pin diameter	Pin length	plate thickness	Inner Plate depth	Atlachment dinension					Weight
	P mm	d1 max mm	b1 min mm	d2 max mm	Lc max mm	t/T mm	h2 max mm	C mm	F mm	L mm	G mm	d4 mm	q kg/m
P450F9SA3	450.0	85.0	78.0	45.0	185.0	18.0	120.0	133.0	150.0	160.0	230.0	26.0	61.7

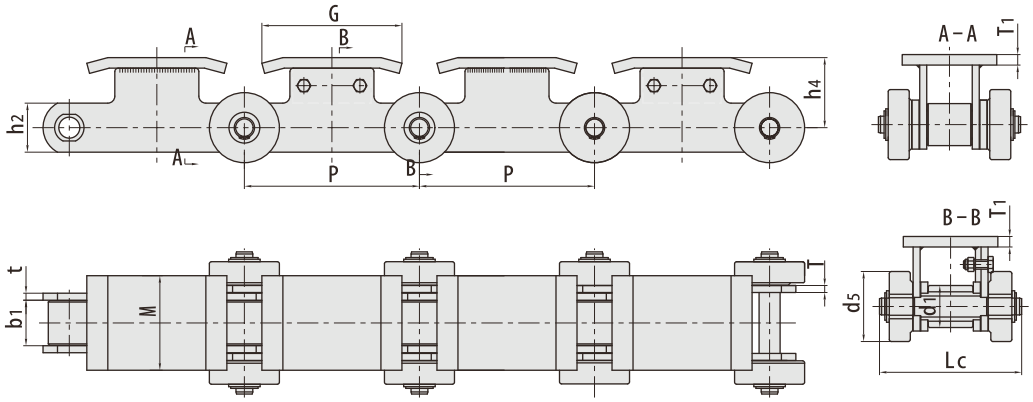

RBL chain number	Pitch	Roller diameter		Width between inner plates	Pin diameter	Pin length	plate thickness	Inner Plate depth	Atlachment dinension				Tensile strength
	P mm	d1 max mm	d5 max mm	b1 min mm	d2 max mm	Lc max mm	t/T mm	h2 max mm	h4 mm	G mm	M mm	T1 mm	Q min kN/LBF
P250F132	250.0	60.0	100.0	65.0	30.0	203.0	10.0	70.0	100.0	200.0	135.0	15.0	412.0/92618.0

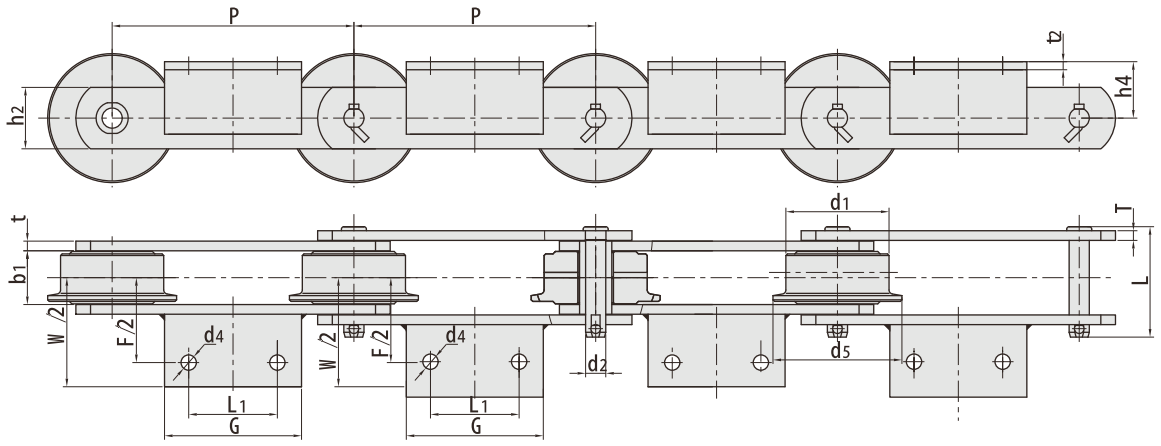

RBL chain number	Pitch	Roller diameter		Width between inner plates	Pin diameter	Pin length	plate thickness	Inner Plate depth	Atlachment dinension							Tensile strength	Weight
	P mm	d1 max mm	d5 max mm	b1 min mm	d2 max mm	Lc max mm	t/T mm	h2 max mm	W mm	F mm	L1 mm	G mm	d4 mm	h4 mm	12 mm	Q min kN/LBF	q kg/m
P300F38A2F	300	128	160	67	25	138	13	78	300	211	110	170	19	70	10	485/109028	49.6

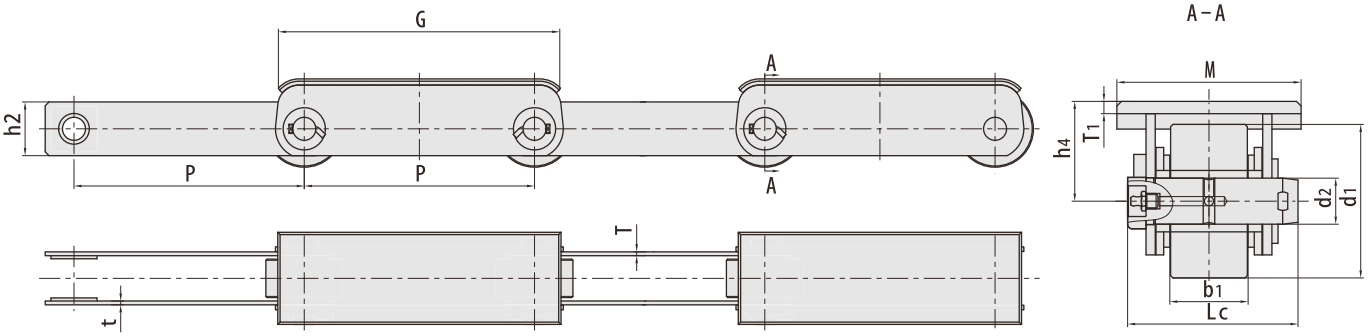

RBL chain number	Pitch	Roller diameter	Width between inner plates	Pin diameter	Pin length	plate thickness	Inner Plate depth	Atlachment dinension				Tensile strength	Weight
	P mm	d1 max mm	b1 min mm	d2 max mm	Lc max mm	t/T mm	h2 max mm	h4 mm	G mm	M mm	T1 mm	Q min kN/LBF	q kg/m
P300F48	300	100	51	30	111	5	70	65	369	120	8	230/51704	25

Blank page

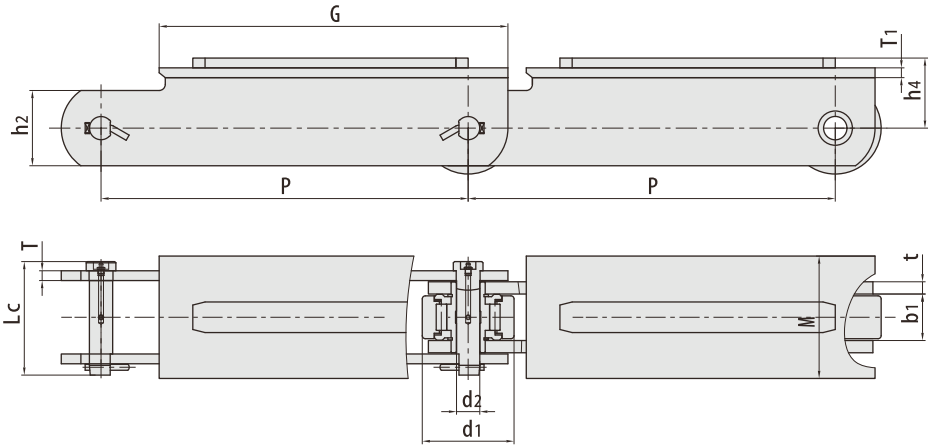

RBL chain number	Pitch	Roller diameter	Width between inner plates	Pin diameter	Pin length	plate thickness	Inner Plate depth	Atlachment dinension				Tensile strength	Weight
	P mm	d1 max mm	b1 min mm	d2 max mm	Lc max mm	t/T mm	h2 max mm	h4 mm	G mm	M mm	T1 mm	Q min kN/LBF	q kg/m
P600F9	600.0	150.0	76.0	38.0	185.5	20/16	123.0	114.5	570.0	200.0	16.0	1300/292240	90.4

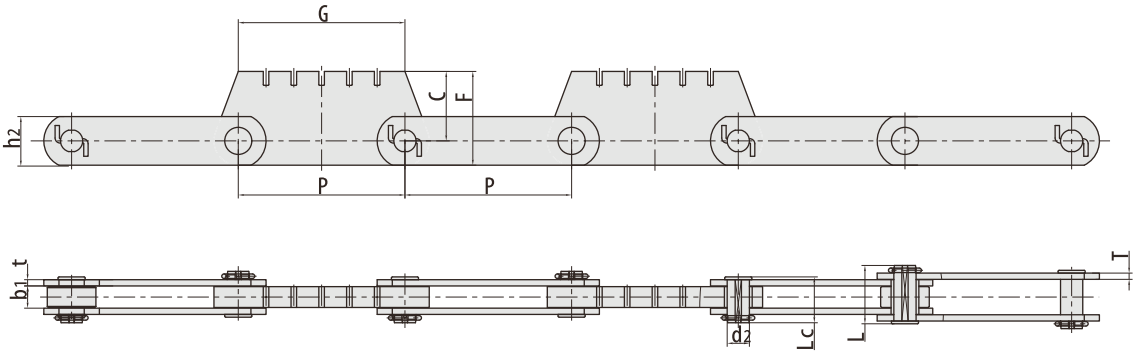

RBL chain number	Pitch	Width between inner plates	Pin diameter	Pin length		plate thickness	Inner Plate depth	Atlachment dinension			Tensile strength
	P mm	b1 min mm	d2 max mm	L max mm	Lc max mm	t/T mm	h2 max mm	C mm	F mm	G mm	Q min kN/LBF
P240F5	240.0	32.0	32.0	66.0	84.0	9.0	70.0	100.0	135.0	240.0	450/101160

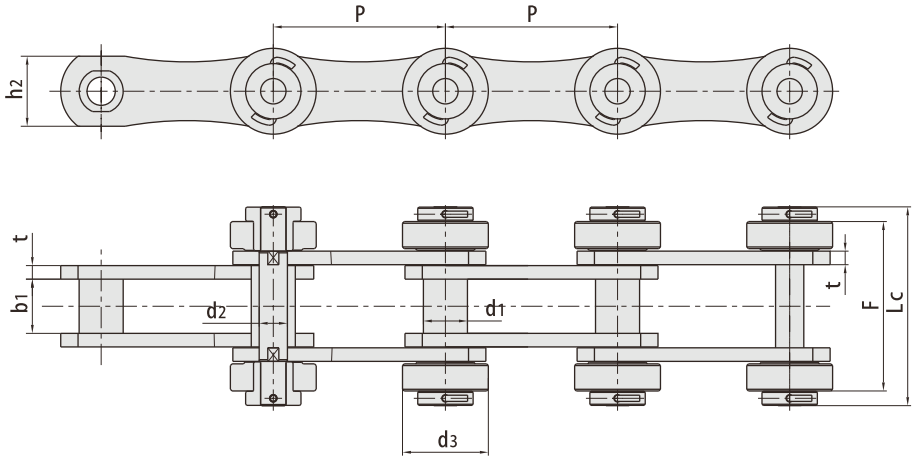

RBL chain number	Pitch	Bush diameter	Width between inner plates	Pin diameter	Pin length	plate thickness	Inner Plate depth	Atlachment dinension		Tensile strength	Weight
	P	d1 max	b1 min	d2 max	Lc max	t	h2 max	d3	F	Q min	q
	mm	mm	mm	mm	mm	mm	mm	mm	mm	kN/LBF	kg/m
P152F207SR2	152.4	39.0	48.0	25.0	176.0	12.0	62.0	133.0	150.0	1500.0/337200	23.7

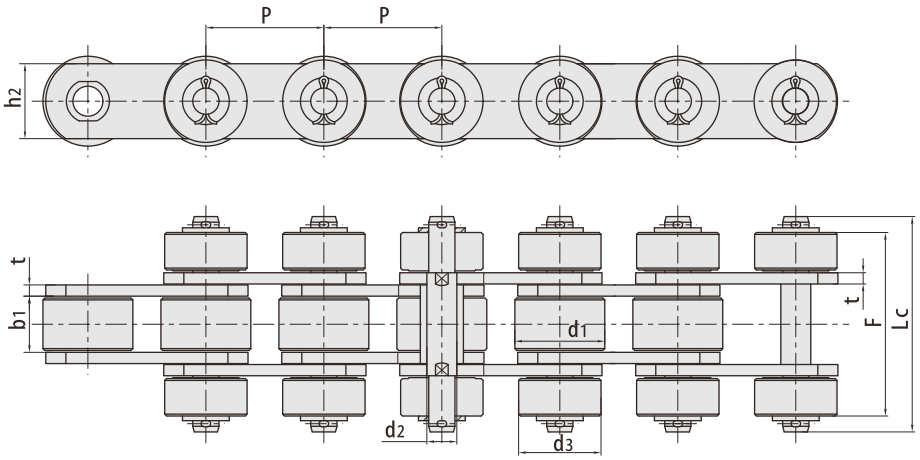

RBL chain number	Pitch	Roller diameter	Width between inner plates	Pin diameter	Pin length	plate thickness	Inner Plate depth	Atlachment dinension		Tensile strength	Weight
	P	d1 max	b1 min	d2 max	Lc max	t	h2 max	d3	F	Q min	q
	mm	mm	mm	mm	mm	mm	mm	mm	mm	kN/LBF	kg/m
P63F47	63.0	48.0	30.0	14.0	115.0	6.0/6.0	40.0	44.0	98.0	160.0/35968	20.5
P101.6F151SR2	101.6	63.5	48.0	18.0	150.0	8.0/8.0	40.0	50.0	134.0	235.0/52828	25.0

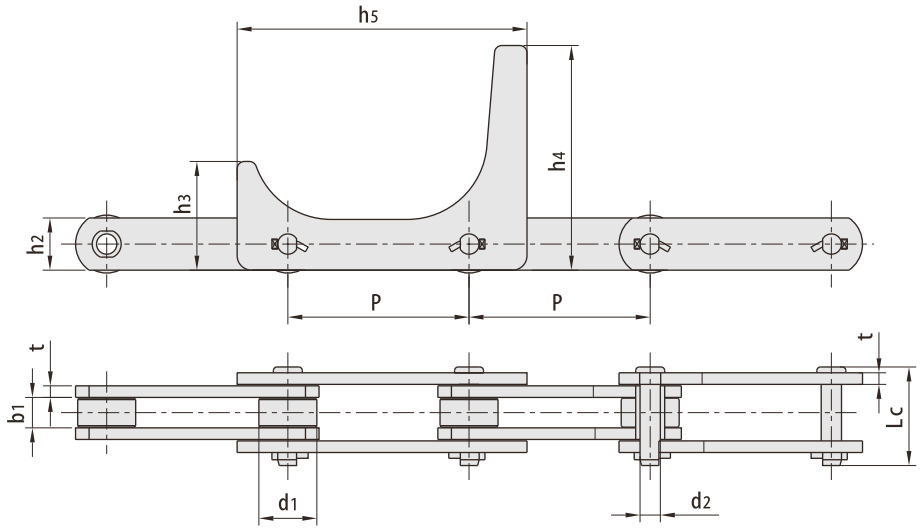

RBL chain number	Pitch	Roller diameter	Width between inner plates	Pin diameter	Pin length	plate thickness	Inner Plate depth	Atlachment dinension			Tensile strength	Weight
	P mm	d1 max mm	b1 min mm	d2 max mm	Lc max mm	t mm	h2 max mm	h3 mm	h5 mm	h6 mm	Q min kN/LBF	q kg/m
P125F51	125.00	40.00	21.00	14.00	77.00	10.00	36.00	75.00	155.00	200.00	160.00/35968	11.70
P125F56	125.00	40.00	21.00	14.00	68.00	8.00	36.00	75.00	155.00	200.00	160.00/35968	9.26

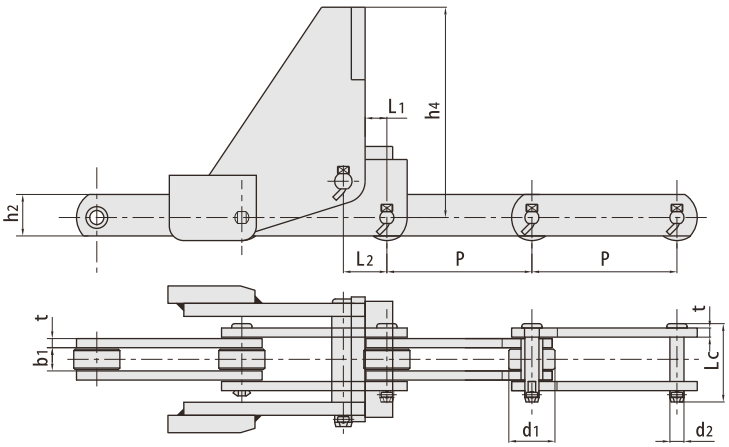

RBL chain number	Pitch	Roller diameter	Width between inner plates	Pin diameter	Pin length	plate thickness	Inner Plate depth	Atlachment dinension			Tensile strength	Average Tensile strength	Weight
	P mm	d1 max mm	b1 min mm	d2 max mm	Lc max mm	t mm	h2 max mm	h4 mm	L1 mm	L2 mm	Q min kN/LBF	Qo kN	q kg/m
P100F254	100.0	31.8	16.0	9.7	54.0	6.3	28.6	145.0	15.0	30.0	160.0/35968	108.0	84.1
P100F341	100.0	31.8	16.0	9.7	54.0	6.3	28.6	145.0	70.0	30.0	160.0/35968	108.0	25.7

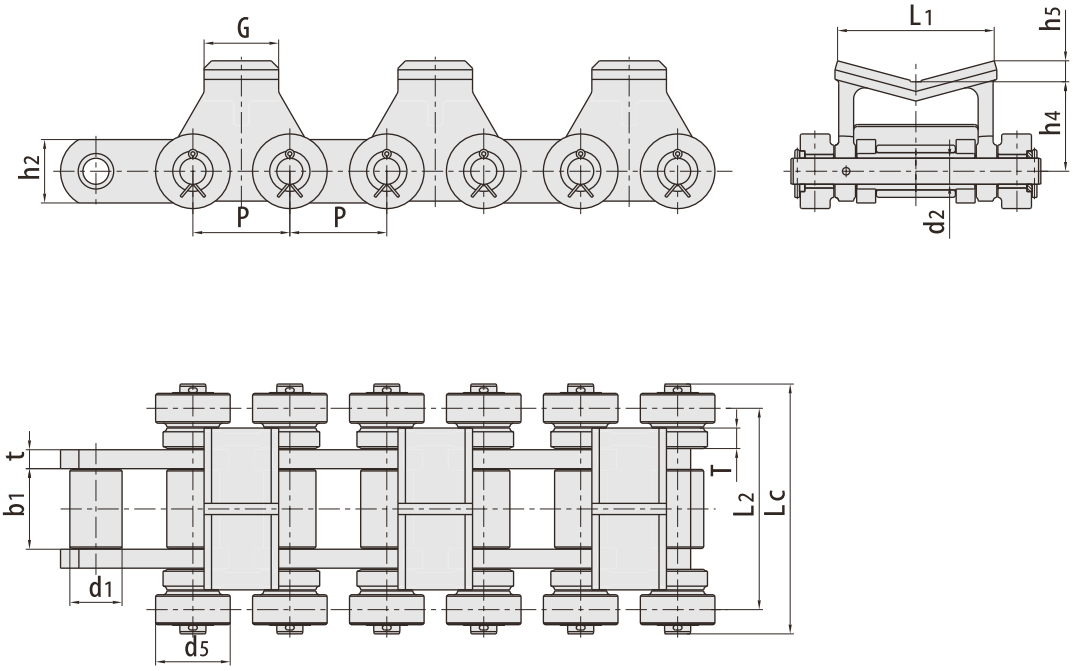

RBL chain number	Pitch P mm	Roller diameter d1 max mm	Width between inner plates b1 min mm	Pin diameter d2 max mm	Pin length Lc max mm	plate thickness t/T mm	Inner Plate depth h2 max mm	Tensile strength Q min kN/LBF	Average Tensile strength Qo kN	Weight q kg/m
P130F6	130	70	108	35	335	25.4/27.5	85	800/179840	880	149.7

RBL chain number	Atlachment dinension				
	h4 mm	h5 mm	L1 mm	L2 mm	d5 mm
P130F6	120	28.5	210	270	100

BC300/400F1

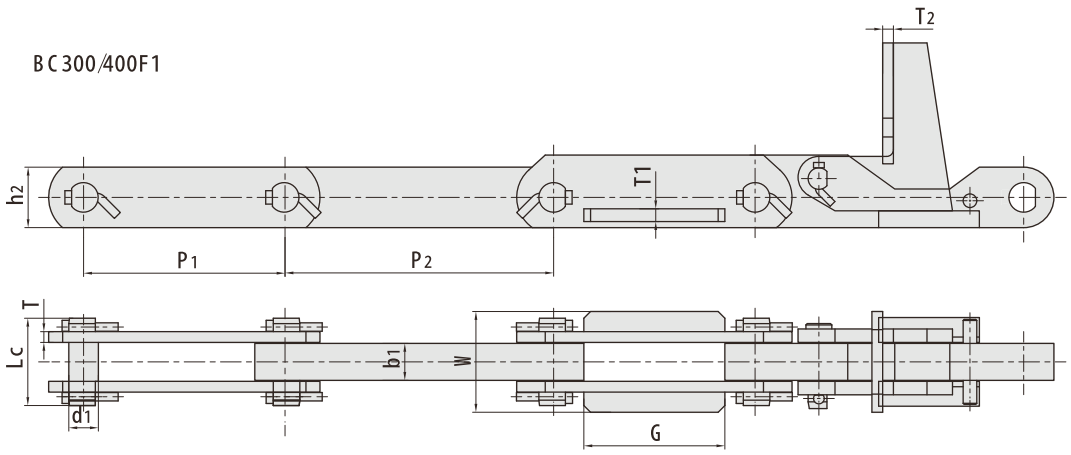

BC350F1

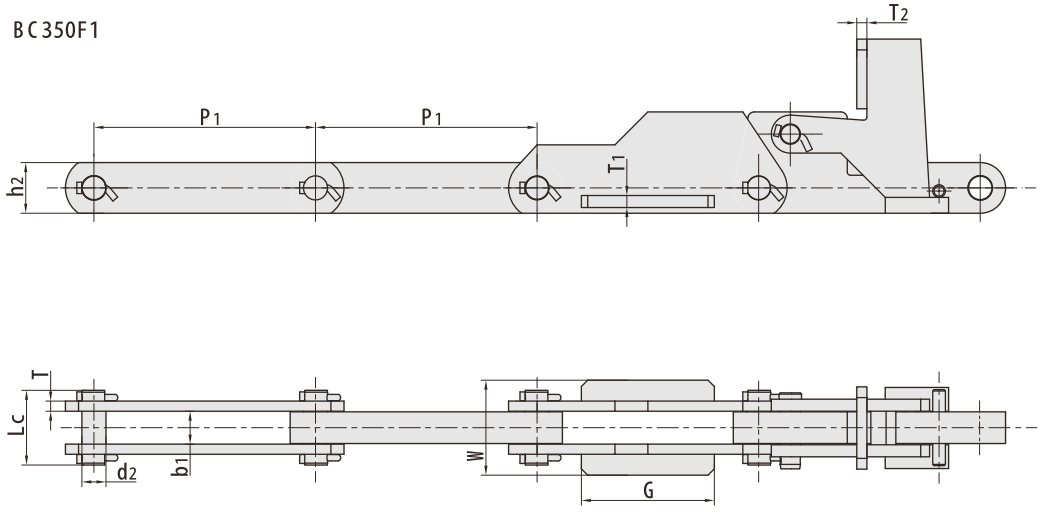

RBL chain number	Pitch		Width between inner plates	Pin diameter	Pin length	Plate dimension		Atlachment dinension				Tensile strength
	P1 mm	P2 mm	b1 min mm	d2 max mm	Lc max mm	h2 mm	T mm	G mm	H mm	T1 mm	T2 mm	Q min kN/LBF
BC300/400F1	300	400	58	42	130	90	16	210	150	19	16	1270/285500
BC350F1	350	-	53	38	118	80	16	210	150	19	16	1080/242793

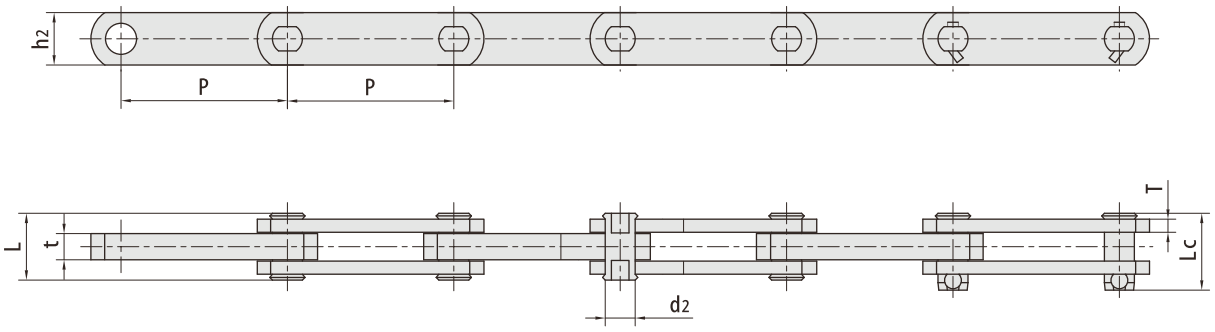

RBL chain number	Pitch	Pin diameter	Pin length		Plate depth	plate thickness	Tensile strength	Average Tensile strength	Weight
	P mm	d2 max mm	L max mm	Lc max mm	h2 max mm	t/T max mm	Q min kN/LBF	Qo kN	q kg/m
BC41.3	41.3	7.94	29.4	-	15.9	15.9/6.4	45.0/10116	50.0	2.30
P100F113	100.0	12.00	30.5	36.0	30.0	12.0/6.0	100.0/22480	110.0	3.59
P127F4	127.0	22.86	51.5	-	40.0	20.0/10.0	170.0/38217	187.0	11.60
BC127F1	127.0	20.00	50.0	57.5	40.0	20.0/10.0	280.0/62946	308.0	7.90
BC127F3	127.0	22.00	47.5	76.0	40.0	20.0/9.5	240.0/53954	276.0	8.04
BC127F4	127.0	32.00	71.0	-	65.0	35.0/12.0	550.0/123645	632.5	22.83
BC150	150.0	32.00	78.0	86.0	65.0	32.0/16.0	637.0/143203	700.0	21.10
BC200F1	200.0	22.12	60.0	-	44.5	30.0/9.5	276.4/62137	304.0	10.23
BC200F2	200.0	26.45	66.0	-	55.0	28.0/12.7	534.9/120250	588.0	14.10
BC200F3	200.0	22.12	60.0	-	50.8	30.0/9.5	401.2/90193	441.0	11.80
BC200F6	200.0	25.40	62.5	-	50.8	24.8/12.7	356.0/80032	409.4	13.50
BC250F1	250.0	26.45	72.0	-	55.0	32.0/12.7	534.9/120250	588.0	14.60
BC250F2	250.0	26.45	72.0	-	50.8	32.0/12.7	454.0/102063	490.0	13.40
BC300F1	300.0	26.50	65.0	-	57.0	30.0/12.7	735.0/165234	808.0	14.40

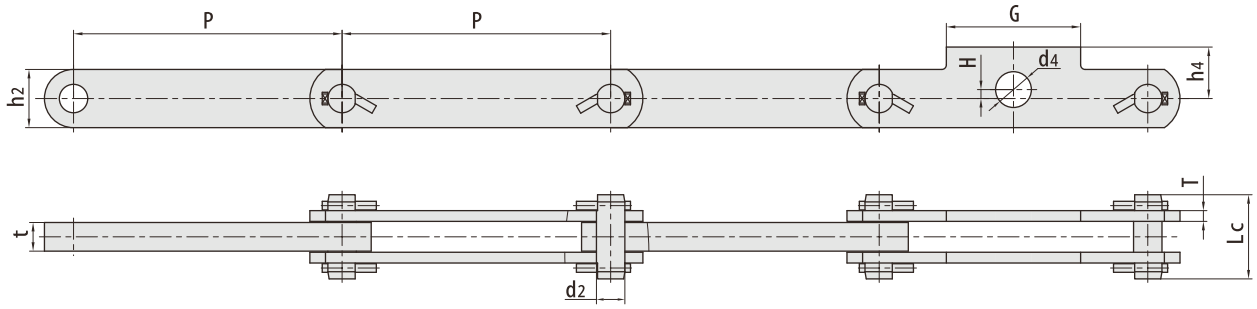

RBL chain number	Pitch	Pin diameter	Pin length	Inner Plate depth	plate thickness	Atlachment dinension				Tensile strength	Weight
	P mm	d2 max mm	Lc max mm	h2 max mm	t/T max mm	G mm	H mm	h4 mm	d4 mm	Q min kN/LBF	q kg/m
BC300F2	300.0	31.75	94.0	65.0	32.0/12.0	150.0	10.0	57.5	40.0	699.0/157141	18.20

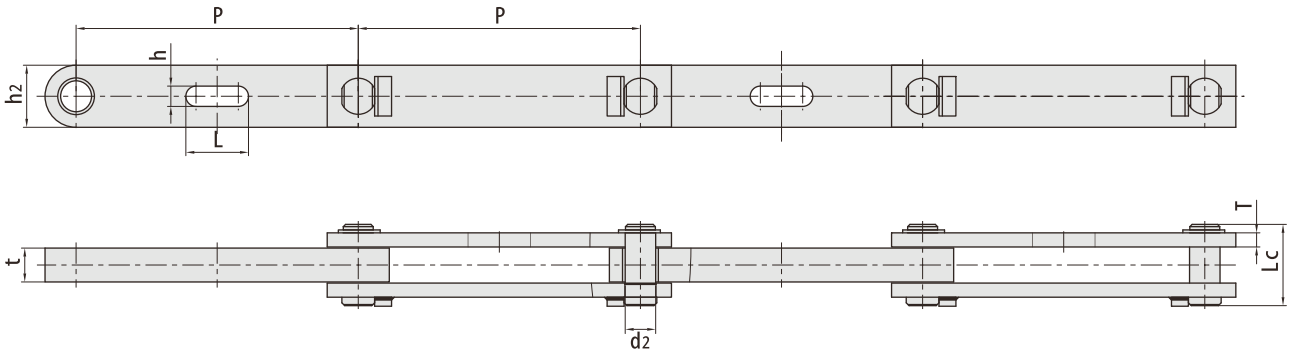

RBL chain number	Pitch	Pin diameter	Pin length	Inner Plate depth	plate thickness	Atlachment dinension		Tensile strength	Weight
	P mm	d2 max mm	Lc max mm	h2 max mm	t/T max mm	h mm	L mm	Q min kN/LBF	q kg/m
BC500F2	500.0	54.00	144.0	110.0	60.0t25.0	110.0	35.0	2160.0/85587	55.90

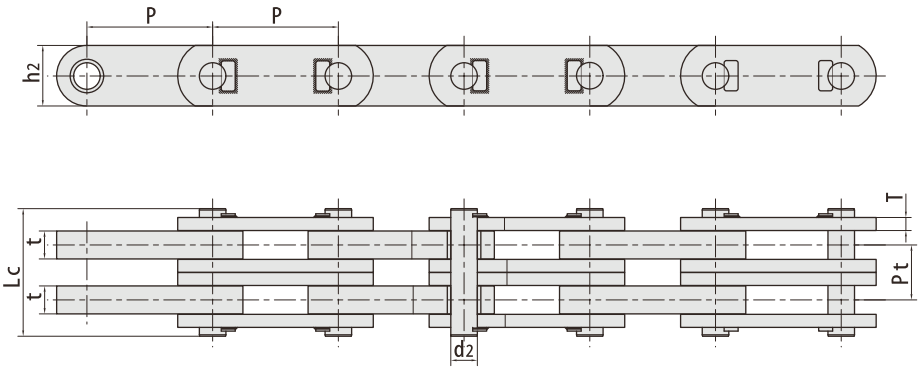

RBL chain number	Pitch P mm	Pin diameter d2 max mm	Pin length Lc max mm	Inner Plate depth h2 max mm	plate thickness t/T max mm	Transverse pitch Pt mm	Tensile strength Q min kN/LBF	Weight q kg/m
BC270F1-2	270.0	57.00	274.0	130.0	60.0/28.0	118.0	6000.0/1348854	171.00

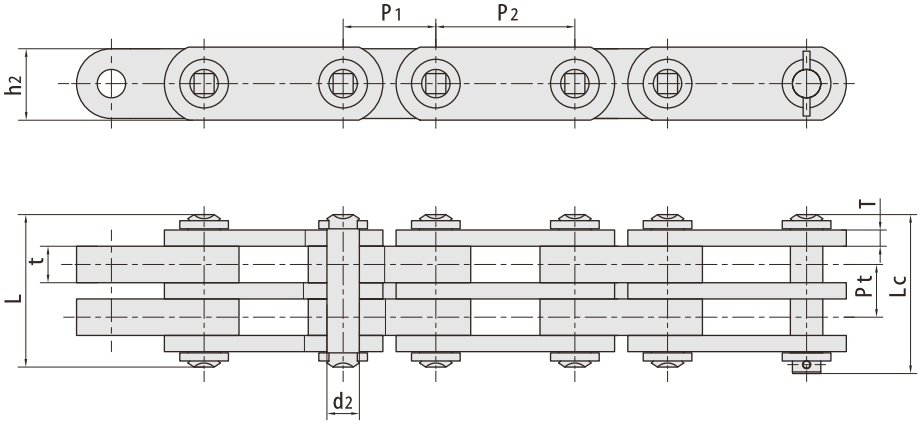

RBL chain number	Pitch		Pin diameter	Pin length		Inner Plate depth	plate thickness	Transverse pitch	Tensile strength	Weight
	P1 mm	P2 mm	d2 max mm	L max mm	Lc max mm	h2 max mm	t/T max mm	Pt mm	Q min kN/LBF	q kg/m
BC171.45F1114.32	114.3	171.45	40.0	188.0	196.0	90.0	45.0/20.0	65.0	2000.0/5000	79.80

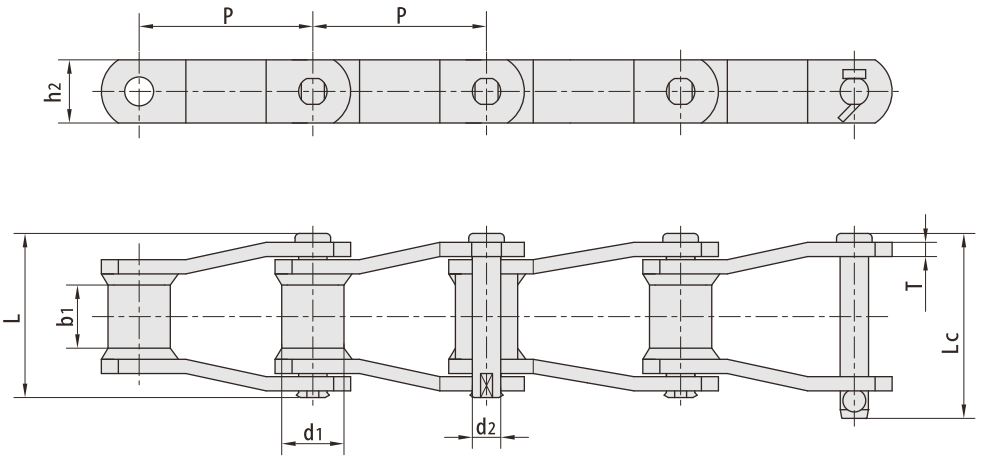

RBL chain number	Pitch P mm	Bush diameter d1 max mm	Width between inner plates b1 min mm	Pin diameter d2 max mm	Pin length L max mm	Pin length Lc max mm	Inner Plate depth h2 max mm	plate thickness t/T max mm	Tensile strength Q min kN/LBF	Average Tensile strength Qo kN	Weight q kg/m
WR78 WH78	66.27	22.90	28.40	12.78	73.00	79.3	28.4	6.4	93.4/21227 106.8/24273	102.70 117.50	6.20
WR82 WH82	78.10	31.50	31.80	14.35	80.00	86.0	31.8	6.4	100.1/22750 131.2/29818	110.10 144.30	7.98
WR106 WH106	152.40	37.10	41.20	19.13	103.00	111.0	38.1	9.7	169.0/38409 224.6/51045	185.90 247.00	10.56
WR110 WH110	152.40	32.00	46.70	19.13	107.70	115.5	38.1	9.7	169.0/38409 224.6/51045	185.90 247.00	10.40
WR111 WH111	120.90	37.10	57.20	19.13	116.80	124.5	38.1	9.7	169.0/38409 224.6/51045	185.90 247.00	12.72
WR124 WH124	101.60	37.10	41.20	19.13	103.00	110.0	38.1	9.7	169.0/38409 224.6/51045	185.90 247.00	12.38
WR124H WH124H	103.20	41.70	41.20	22.30	131.60	133.0	50.8	12.7	275.8/62682 355.9/80886	303.30 391.40	19.68
WR132 WH132	153.67	44.70	76.20	25.48	151.00	162.2	50.8	12.7	275.8/62682 378.1/85932	303.30 415.90	20.00
WR150 WH150	153.67	44.45	73.00	25.40	151.00	162.2	63.5	12.7	530.0/119144	583.00	20.50
WR155 WH155	153.67	44.45	73.00	28.57	164.00	176.0	63.5	12.7	820.0/186361	902.00	20.70
WR157 WH157	153.67	44.45	76.20	28.57	164.00	176.0	63.5	15.9	820.0/186361	902.00	20.80
WR78F5	66.27	21.30	20.00	12.70	62.99	66.1	25.4	6.4	66.7/14994	73.37	5.00
WH78F4	66.27	22.90	22.23	12.78	66.40	72.3	28.4	6.4	106.8/24009	117.48	5.94
WH124F1	101.60	31.75	38.10	19.05	101.50	109.5	38.1	9.5	253.0/56876	278.00	11.40
WH111F1	120.90	36.50	57.20	19.05	120.60	120.6	38.1	9.5	272.0/61148	299.20	12.63

Note: WR - Welded steel chain - only pins & bushes heat treated
WH - Welded steel chain - all heat treated

With K1 attachments

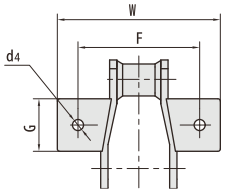

With A1 attachments

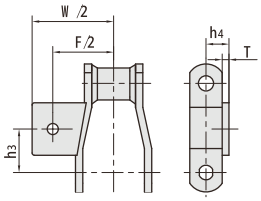

RBL chain number	h3 mm	G mm	F mm	W mm	h4 mm	d4 mm	T mm
WR78 WH78	31.8	36.6	101.6	130.0	22.4	9.7	6.4
WR82 WH82	38.1	46.0	106.7	142.7	23.9	9.7	6.4

With K2 attachments

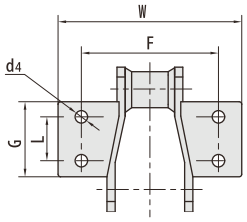

With A2 attachments

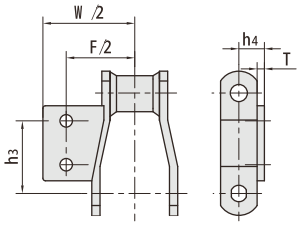

RBL chain number	L mm	G mm	h3 mm	F mm	W mm	h4 mm	D4 mm	T mm
WR78 WH78	28.4	52.3	38.9	101.6	130.0	22.4	9.7	6.4
WR82 WH82	33.3	62.0	52.3	108.2	142.7	23.9	9.7	6.4
WR110 WH 110	44.4	84.1	98.6	135.1	168.1	30.0	9.7	9.7
WR111 WH111	58.7	90.4	89.9	159.0	193.5	30.0	12.7	9.7
WR124 WH124	49.3	77.7	71.4	133.6	180.8	30.0	9.7	9.7
WR124H WH124H	49.3	80.8	73.2	133.6	165.6	39.6	12.7	12.7
WR132 WH132	69.8	80.8	106.2	190.5	234.7	39.6	12.7	12.7

With A22 attachments

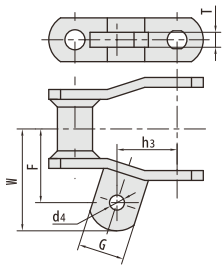

RBL chain number	h3 mm	G mm	F mm	W mm	d4 mm	T mm
WR78 WH78	33.3	30	47.8	65.0	9.7	9.7

With H1 attachments

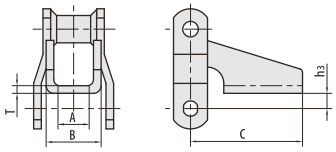

RBL chain number	h3 mm	A mm	B mm	C mm	T mm
WR78 WH78	12.7	22.4	50.8	93.5	6.4
WR82 WH82	15.7	28.4	57.2	93.5	6.4

With H2 attachments

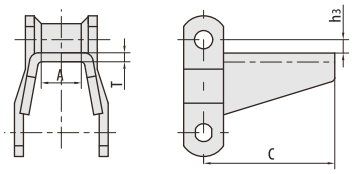

RBL chain number	h3 mm	A mm	C mm	T mm
WR78 WH78	7.9	20.8	93.5	6.4
WR82 WH82	7.9	26.4	96.8	6.4

With F2 attachments

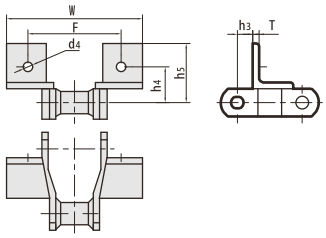

RBL chain number	h3 mm	h4 mm	h5 mm	F mm	W mm	d4 mm	T mm
WR78 WH78	15.7	36.6	60.5	96.5	138.2	9.7	6.4

With F4 attachments

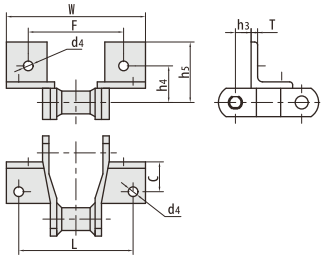

RBL chain number	h3 mm	h4 mm	h5 mm	L mm	C mm	F mm	W mm	d4 mm	T mm
WR78 WH78	17.3	44.4	60.5	114.3	31.8	95.2	141.2	9.7	6.4
WR82 WH82	20.6	46.2	62.0	127.0	28.4	104.6	150.9	9.7	6.4
WR124 WH124	22.4	52.3	73.2	133.6	36.6	111.3	157.0	9.7	9.7

With R1 & RR1 attachments

RBL chain number	h3 mm	C mm	T mm
WR78 WH78	17.3	41.1	6.4
WR82 WH82	22.4	49.3	6.4
WR124 WH124	31.8	49.3	9.7

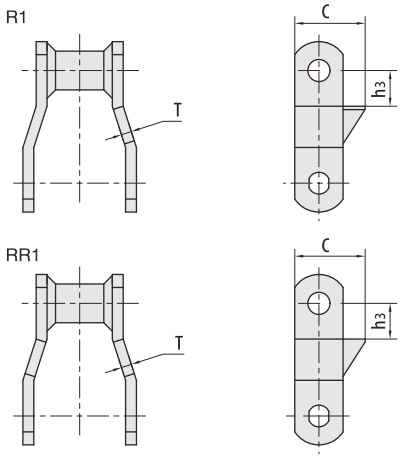

With R2 & RR2 attachments

RBL chain number	h3 mm	C mm	T mm
WR78 WH78	17.3	41.1	6.4
WR82 WH82	22.4	49.3	6.4
WR124 WH124	31.8	49.3	9.7

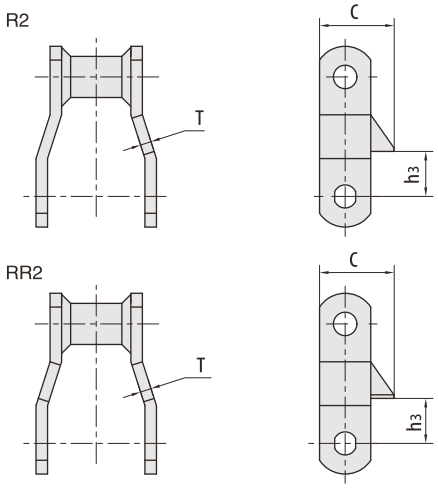

With W1 attachments

RBL chain number	h3 mm	W mm	T mm
WR78 WH78	19.1	153.9	6.4
WR82 WH82	23.9	166.6	6.4
WR124 WH124	30.0	217.4	6.4
WR124H WH124H	35.1	217.4	9.7
WR132 WH 132	38.1	316.0	9.7

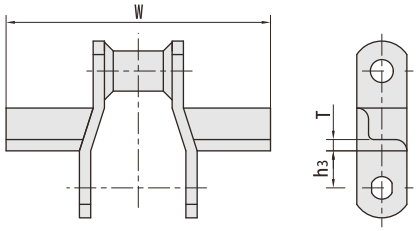

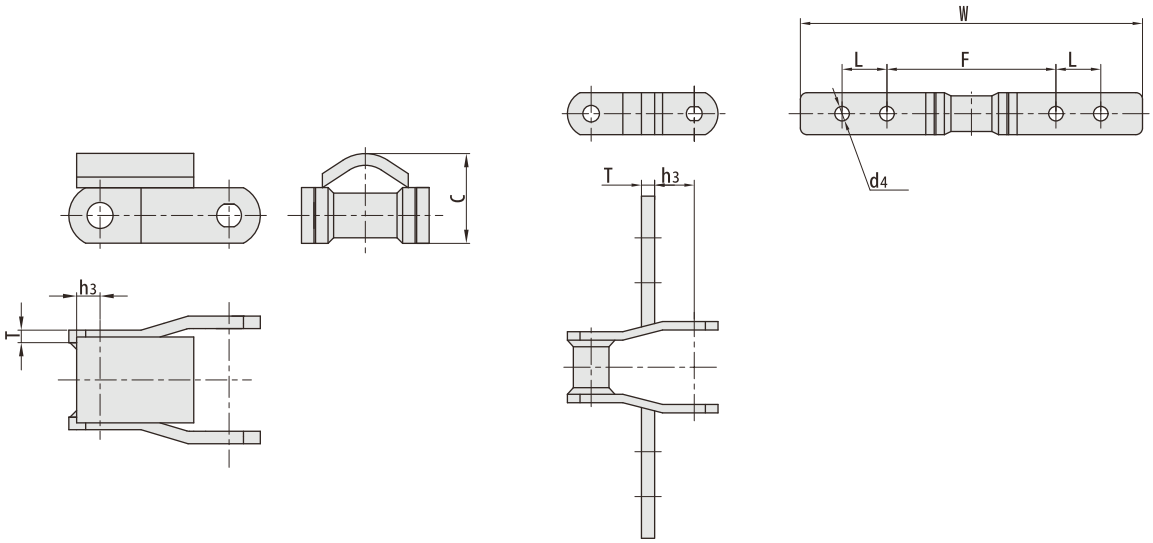

RBL chain number	h3 mm	C mm	T mm
WH78F10	12.0	46.0	6.4

RBL chain number	h3 mm	F mm	L mm	W mm	d4 mm	T mm
WH82F3K2	30.0	128.0	34.0	260.0	11.0	10.0
WH150F2	72.0	230.0	70.0	430.0	14.0	10.0

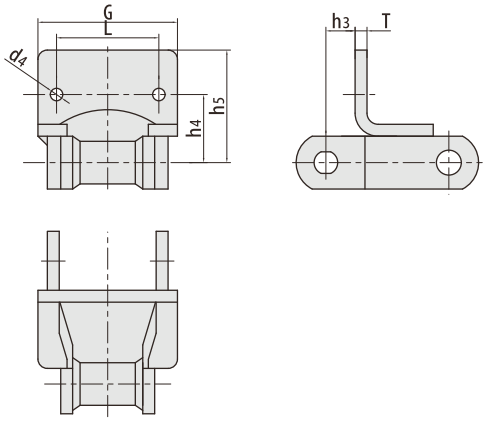

RBL chain number	h3 mm	h4 mm	h5 mm	G mm	L mm	d4 mm	T mm
WH78F6	15.7	36.6	60.5	75.0	55.0	6.7	6.4

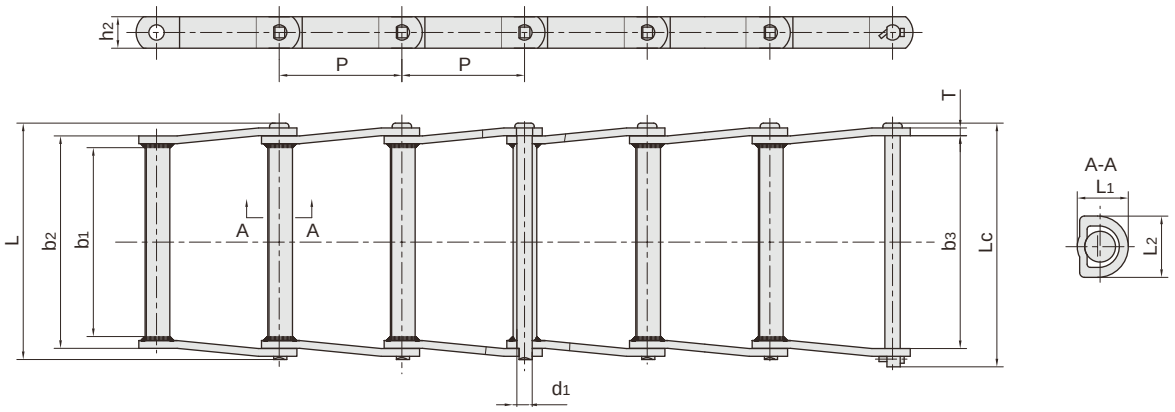

RBL chain number	Pitch	Bush A-A sec T1 on length		Width between narrow L1nkend	Pin diameter end	Width over narrow L1nkend	Width between broad L1nkend	Plate depth
	P mm	L1 mm	L2 mm	b1 min mm	d1 max mm	b2 max mm	b3 min mm	h2 max mm
WD102	127.0	31.7	39.1	162.0	19.13	197.1	197.6	38.12
WD104	152.4	31.7	39.1	104.6	19.13	136.9	137.4	38.12
WD110	152.4	31.7	39.1	228.6	19.13	263.9	264.4	38.12
WD112	203.2	31.7	39.1	228.6	19.13	263.9	264.4	38.12
WD113	152.4	33.2	39.1	228.6	22.30	270.2	270.7	38.12
WD116	203.2	36.6	45.2	330.2	19.13	359.1	359.6	45.21
WD118	203.2	44.5	51.8	336.5	22.30	378.2	378.7	51.80
WD122	203.2	44.5	51.8	222.2	22.30	260.6	261.1	51.80
WD480	203.2	44.5	51.8	284.4	22.30	324.1	324.6	51.80

RBL chain number	Pin length		plate thickness	Tensile strength	
	L max mm	Lc max mm	T mm	Q min kN/LBF Only Pin hardened	Q min kN/LBF All parts hardened
WD102	255.6	245.4	9.7	170/38217.0	245/55078.20
WD104	188.0	181.4	9.7	170/38217.0	245/55078.20
WD110	315.0	308.6	9.7	170/38217.0	245/55078.20
WD112	315.0	308.6	9.7	170/38217.0	245/55078.20
WD113	330.2	322.3	12.7	213/47884.3	253/56876.68
WD116	410.4	405.9	9.7	245/55078.2	262/58899.90
WD118	440.0	431.1	12.7	311/69915.6	351/78907.96
WD122	324.2	314.5	12.7	311/69915.6	351/78907.96
WD480	387.6	378.0	12.7	311/69915.6	351/78907.96

With C1 attachment

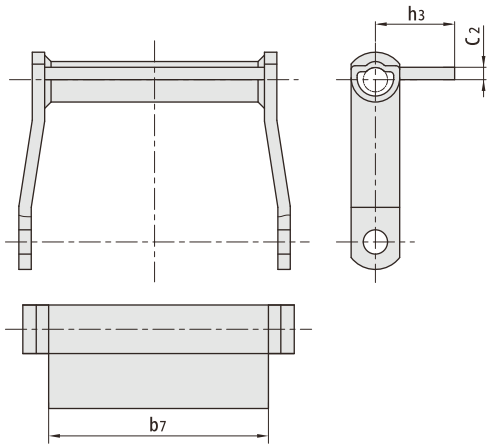

With C4 attachment

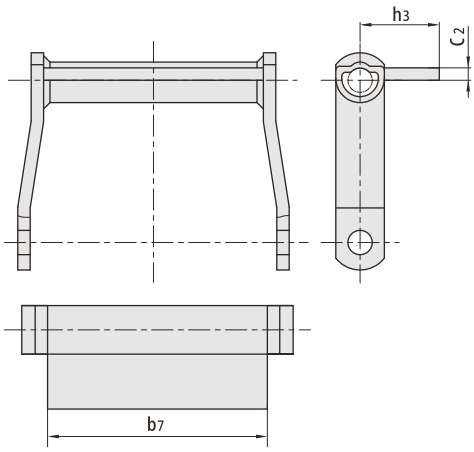

RBL chain number	C2 mm	b7 max mm	h3 max mm
WD102	9.7	197.1	62.0
WD104	9.7	136.9	62.0
WD110	9.7	263.9	62.0
WD112	9.7	263.9	62.0
WD116	9.7	359.2	68.1

With C3 attachment

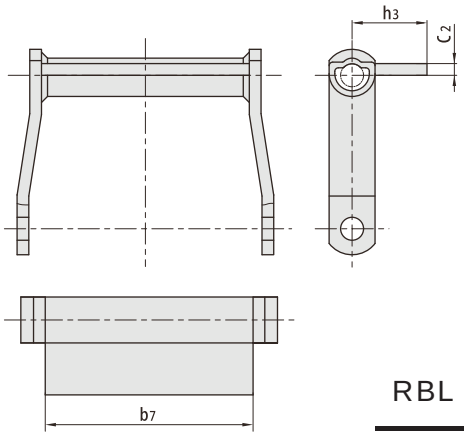

RBL chain number	C2 mm	b7 max mm	h3 max mm
W0102	9.7	197.1	96.8
WD104	9.7	136.9	96.8
WD110	9.7	263.9	96.8
WD112	9.7	263.9	96.8
WD113	12.7	270.3	122.2
WD116	9.7	359.2	125.5
WD480	12.7	324.1	128.5

RBL chain number	C2 mm	b7 max mm	h3 max mm
WD110	12.7	263.9	58.7
WD113	12.7	270.3	58.7
WD118	12.7	378.2	77.7
WD480	12.7	324.1	77.7

With RR attachments

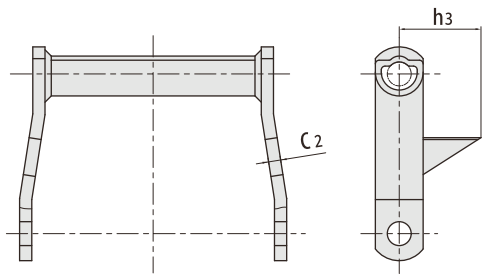

With Wing attachments

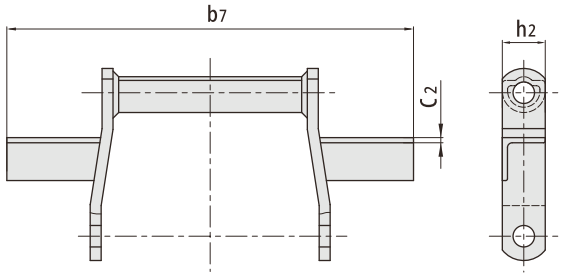

RBL chain number	C2 mm	h3 max mm
WD102	9.7	65.0
WD104	9.7	65.0
WD110	9.7	65.0
WD112	9.7	65.0
WD113	12.7	65.0
WD116	9.7	77.7
WD118	12.7	79.2
WD480	12.7	84.1

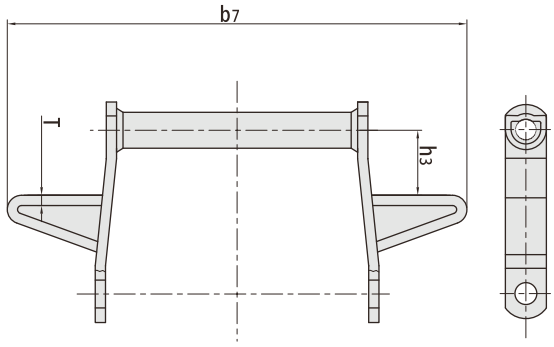

RBL chain number	C2 mm	b7 max mm	h2 max mm
WD102	9.7	365.3	39.6
WD104	9.7	295.1	39.6
WD110	9.7	434.8	39.6
WD112	9.7	434.8	39.6
WD113	9.7	434.8	39.6
WD116	9.7	434.8	39.6
WD118	9.7	561.8	46.0
WD480	9.7	561.8	52.3

RBL chain number	C2 mm	b7 mm	T mm
WDH122F3	82.55	558.8	12.7

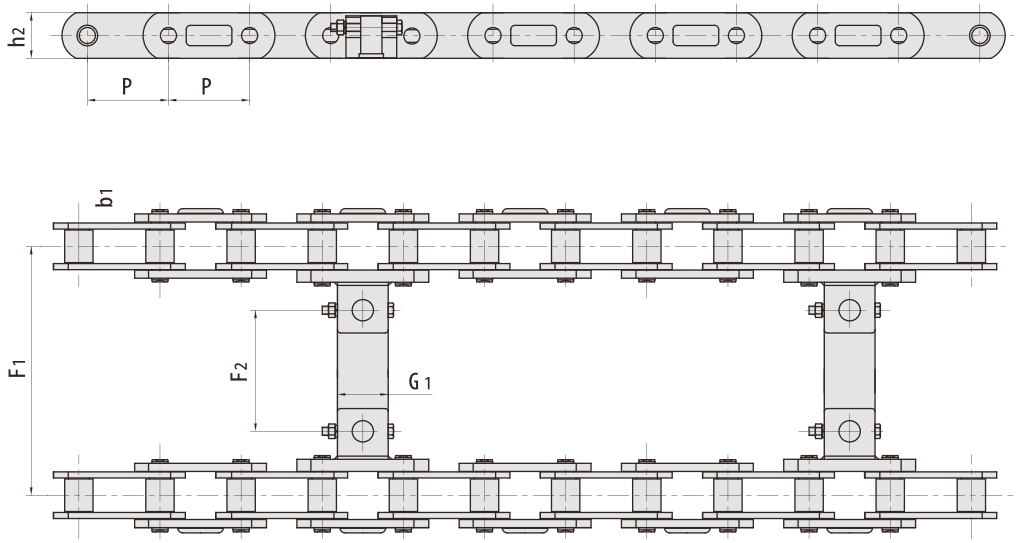

RBL chain number	P mm	b1 mm	h2 mm	F1 mm	F2 mm	G1 mm
P80F8	80.0	33.8	45.0	575.0	449.0	50.0
P80F17	80.0	35.3	45.0	575.0	442.4	50.0
P80F27	80.0	35.3	46.0	497.4	385.0	50.0
P80F41	80.0	33.8	45.0	509.5	396.5	50.0
P80F45	80.0	35.0	45.0	540.0	425.0	50.0
TPJP80F1	80.0	33.8	45.0	500.0	374.0	50.0
TPJP80F3	80.0	33.8	45.0	561.0	448.0	50.0
TPJP80F4	80.0	33.8	45.0	585.0	472.0	50.0
TPJP80F12	80.0	33.8	45.0	584.5	471.5	50.0

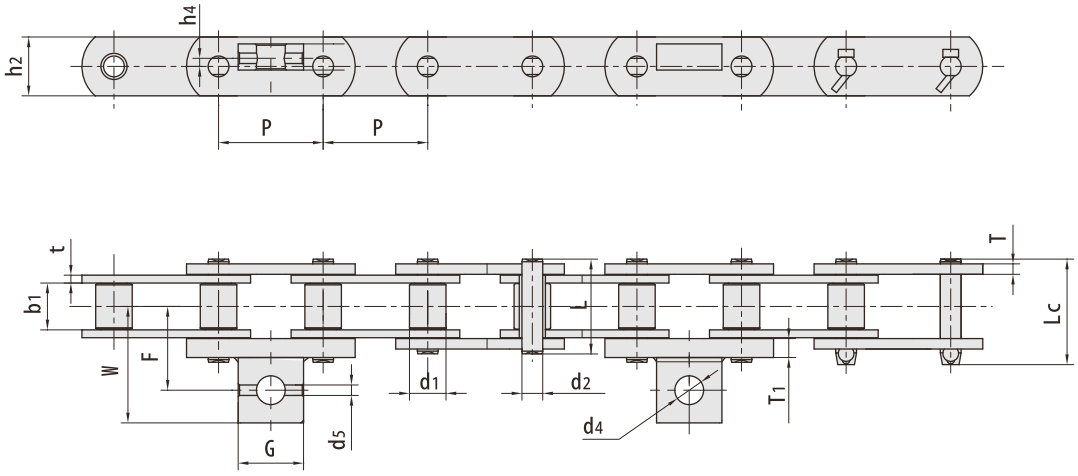

RBL chain number	Pitch	Roller diameter	Width between inner plates	Pin diameter	Pin length		Plate depth	plate thickness	Tensile strength	Weight
	P	b1 max	b1 min	d2 max	L max	Lc max	h2 max	t/T	Q min	q
	mm	mm	mm	mm	mm	mm	mm	mm	kN/LBF	kg/m
P70F23	70.00	25.40	25.2	14.61	53.4	59.7	32.00	5.6/5.0	120.0/26976	5.99
M 112F12-S-70	70.00	30.00	32.0	15.00	60.0	65.5	40.00	6.0/4.0	112.0/25178	9.50
*P75	75.00	15.00	18.0	9.80	39.5	44.3	25.00	4.0	48.0/10790	2.60
P 78.11F29	78.11	31.75	38.1	16.00	-	88.6	38.10	8.0	169.0/37991	10.56
P80F7	80.00	35.76	35.3	18.00	72.0	76.7	46.00	7.0/6.2	95.0/21370	11.91
P80F8	80.00	27.94	33.8	15.90	68.4	76.0	44.45	6.0/6.0	190.0/42741	10.80
P80F17	80.00	36.00	35.3	18.00	81.0	81.5	45.00	6.0/5.0	195.0/43866	12.90
P80F19	80.00	27.94	33.8	15.90	68.4	75.8	45.00	6.0/8.0	190.0/42741	11.20
P80F21	80.00	27.94	34.0	15.90	78.4	-	45.00	6.0/8.0	190.0/42741	10.70
*P80F27	80.00	26.00	35.3	18.00	72.0	76.7	46.00	7.0/6.2	195.0/43866	9.55
P80F29	80.00	27.94	33.8	15.90	70.4	74.0	45.00	6.0/6.0	190.0/42741	10.80
*P80F30	80.00	26.00	35.0	18.00	72.0	75.8	45.00	6.0/8.0	195.0/43836	10.50
P80F39	80.00	27.95	33.8	15.87	68.4	75.8	45.00	6.0/8.1	190.0/42712	10.70
P80F45	80.00	32.00	35.0	15.90	70.6	78.0	45.00	6.0/8.0	190.0/42741	10.94
*P80F51A1	80.00	26.00	35.0	15.90	69.5	77.0	45.00	6.0/8.0	175.0/39340	10.42
P80F62	80.00	27.95	33.8	15.87	68.4	75.8	45.00	6.0/8.1	190.0/42712	10.60
*P80F69	80.00	26.00	35.0	18.00	72.0	78.0	45.00	6.0/8.0	195.0/43836	10.50
P80F87	80.00	36.00	35.3	18.00	84.0	88.5	45.00	10.0	250.0/56200	15.20

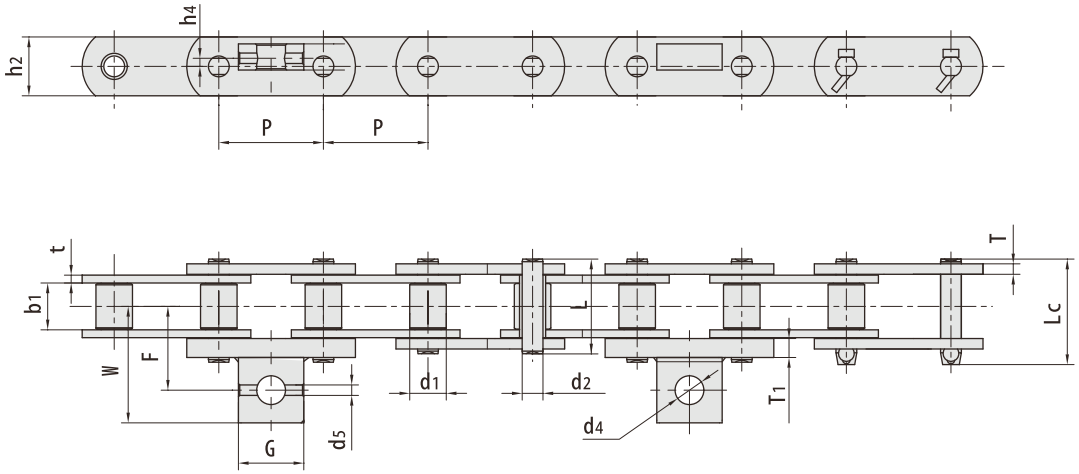

RBL chain number	F mm	W mm	G mm	h4 mm	d4 mm	d5 mm	T1 mm
P70F23	43.75	64.1	40.0	6.5	22.0	7.0	5.00
M112F12-S-70	60.00	77.4	30.0	7.5	15.0	-	10.00
P75	32.20	46.2	30.0	5.2	14.0	-	4.00
P78.11F29	53.10	78.5	50.8	12.7	19.3	-	7.95
P80F7	56.40	81.4	50.5	5.0	21.0	8.2	6.20
P80F8	63.00	88.0	50.0	8.0	22.0	10.2	14.20
P80F17	66.30	91.3	50.0	-	24.0	-	15.00
P80F19	56.50	81.5	50.0	6.2	22.0	8.0	8.00
P80F21	57.00	82.0	50.0	-	21.5	-	8.00
P80F27	56.20	81.5	50.5	-	21.0	-	6.20
P80F29	56.50	81.5	50.0	6.2	22.0	10.0	8.00
P80F30	57.00	82.2	50.5	5.0	21.0	-	8.00
P80F39	56.50	81.5	50.0	6.2	22.0	8.0	8.00
P80F45	57.50	80.0	50.0	-	25.0	-	8.00
P80F51A1	57.00	82.0	50.0	-	20.5	-	8.00
P80F62	56.50	81.5	50.0	6.5	22.0	8.6	8.00
P80F69	56.50	82.2	50.5	5.5	20.5	-	8.00
P80F87	58.50	72.4	48.0	-	12.0	-	10.00

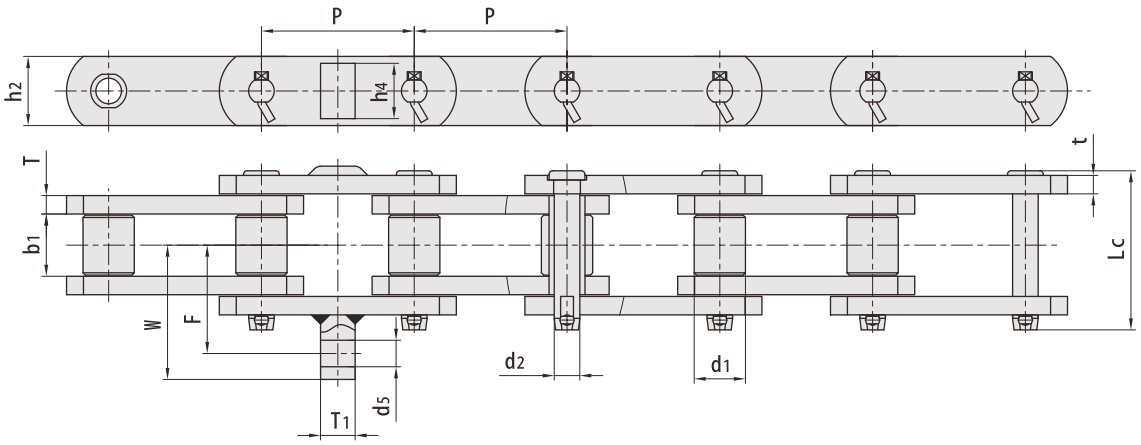

RBL chain number	Pitch P mm	Roller diameter d1 max mm	Width between inner plates b1 min mm	Pin diameter d2 max mm	Pin length L max mm	Inner Plate depth h2 mm	plate thickness t/T mm	Tensile strength Q min kN/LBF	Weight q kg/m
P66.27F10	66.27	22.23	27.00	11.10	69.00	30.00	8.00	90.0/20232	6.96

RBL chain number	F mm	W mm	h4 mm	d5 mm	T1 mm
P66.27F10	47.00	58.50	24.00	11.50	15.00

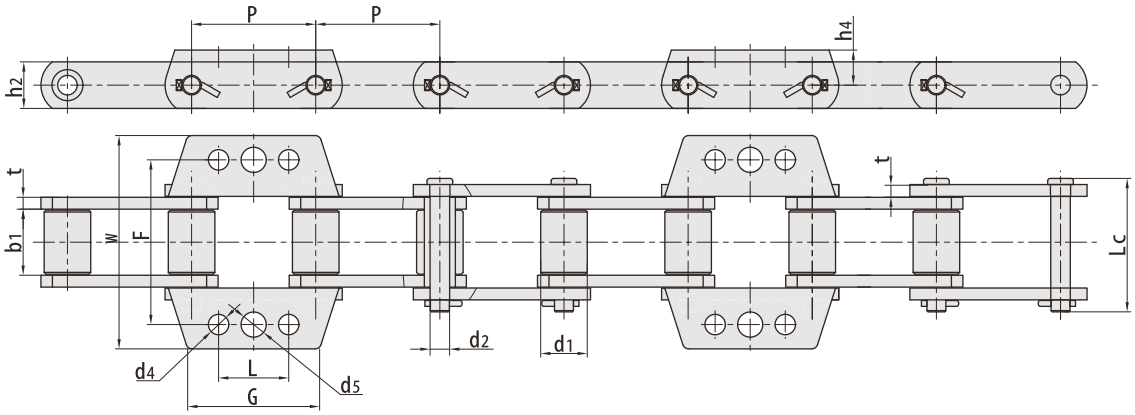

RBL chain number	Pitch P mm	Roller diameter d1 max mm	Width between inner plates b1 min mm	Pin diameter d2 max mm	Pin length Lc max mm	Inner Plate depth h2 max mm	plate thickness t mm	Tensile strength Q min kN/LBF	Weight q kg/m
P101.6F189K3	101.60	38.10	54.10	16.00	109.20	44.45	9.70	182.340981	14.45

RBL chain number	F mm	W mm	L mm	h4 mm	d4 mm	d5 mm	G mm
P101.6F189K3	134.80	174.600	57.40	28.70	16.70	20.60	108.00

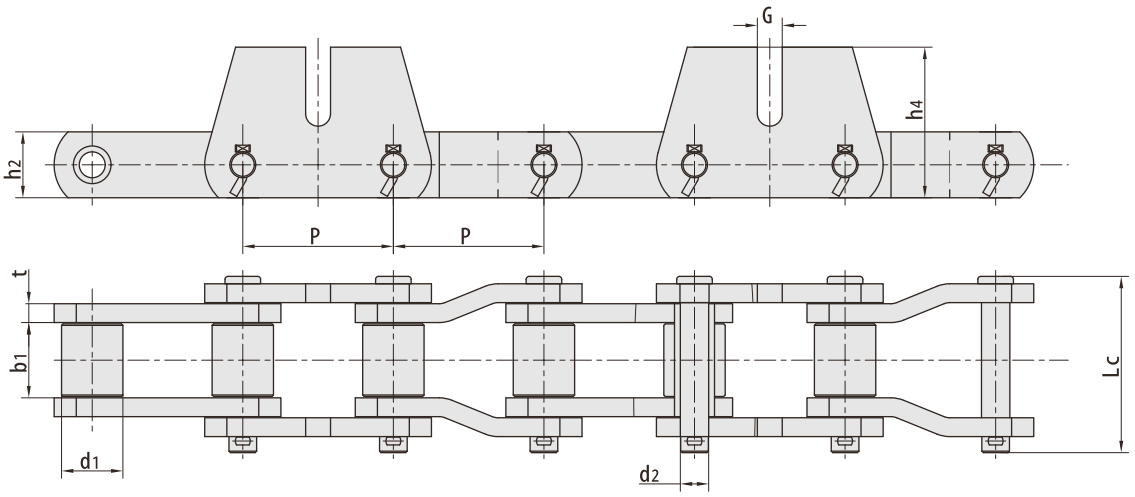

RBL chain number	Pitch	Roller diameter	Width between inner plates	Pin diameter	Pin length	Inner Plate depth	plate thickness	Atlachment dinension		Tensile strength	Weight
	P mm	d1 max mm	b1 min mm	d2 max mm	Lc max mm	h2 mm	t mm	h4 mm	G mm	Q min kN/LBF	q kg/m
P101.6F186	101.60	41.40	50.80	19.12	120.00	44.45	12.70	101.60	16.80	320.0/71936	22.50

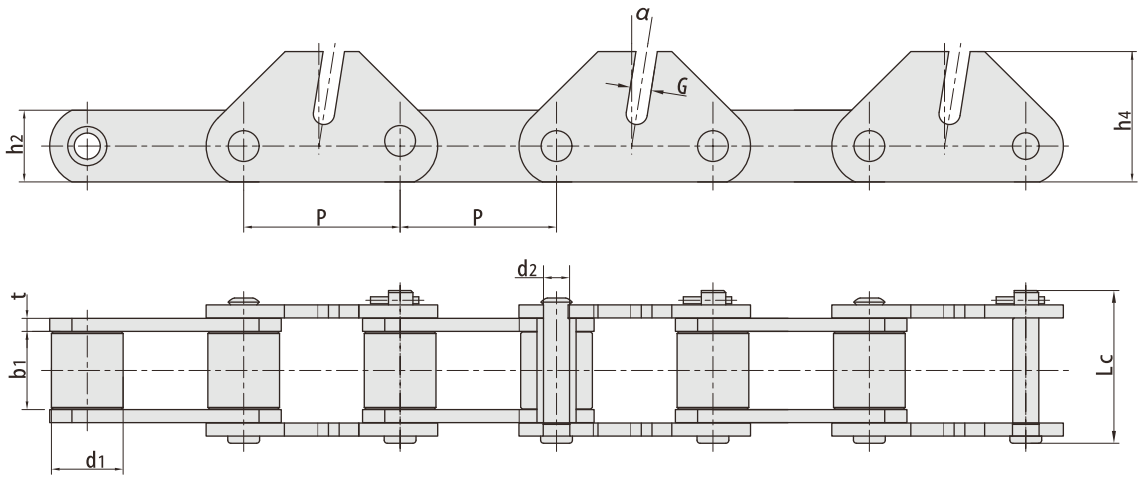

RBL chain number	Pitch	Roller diameter	Width between inner plates	Pin diameter	Pin length	Inner Plate depth	plate thickness	Atlachment dinension			Tensile strength	Weight
	P mm	d1 max mm	b1 min mm	d2 max mm	Lc max mm	h2 max mm	t mm	h4 mm	G mm	a mm	Q min kN/LBF	q kg/m
P152F251	152.40	69.85	76.20	25.40	148.80	69.85	12.70	127.00	20.60	9°	431.5/97001	39.40

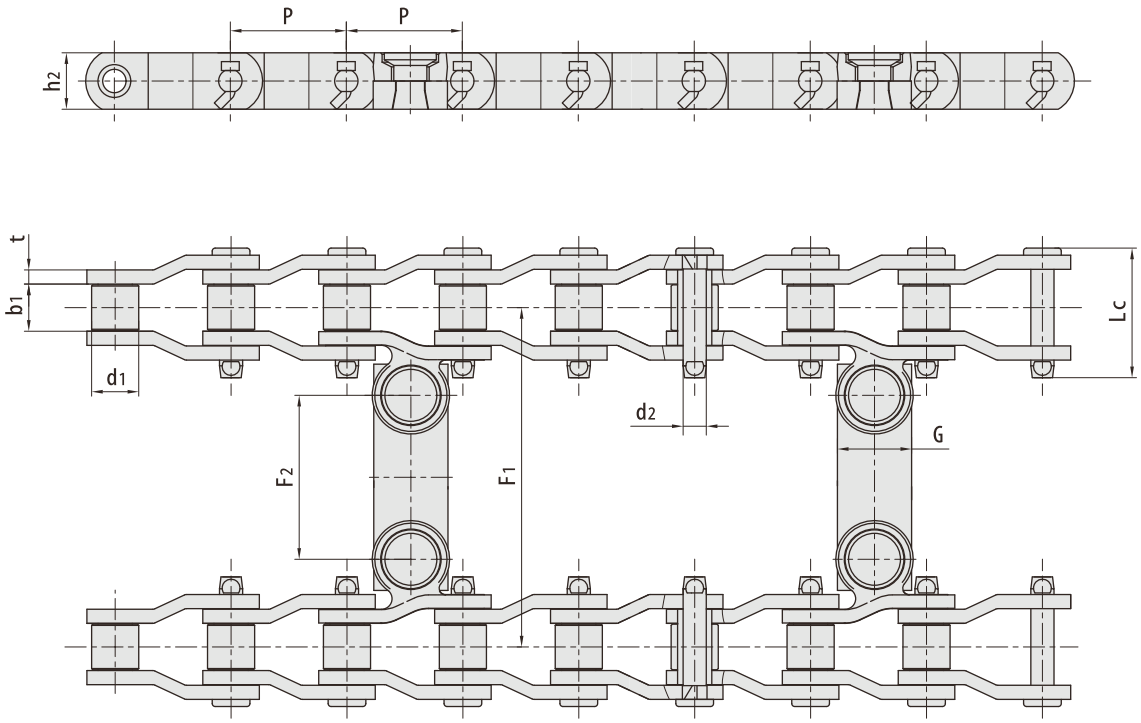

RBL chain number	Pitch	Roller diameter	Width between inner plates	Pin diameter	Pin length	Inner Plate depth	plate thickness	Atlachment dinension			Tensile strength	Weight
	P mm	d1 max mm	b1 min mm	d2 max mm	Lc max mm	h2 max mm	t mm	F1 mm	F2 mm	G mm	Q min kN/LBF	q kg/m
SS40SL	78.105	31.78	31.75	15.90	89.15	38.00	9.50	-	-	-	225.00/50818	12.03
SS40SLF2	78.13	31.75	31.75	15.70	87.35	38.10	9.52	543.00	424.66	50.00	225.00/50580	35.00

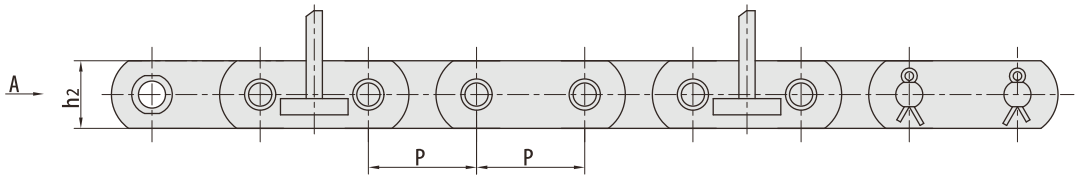

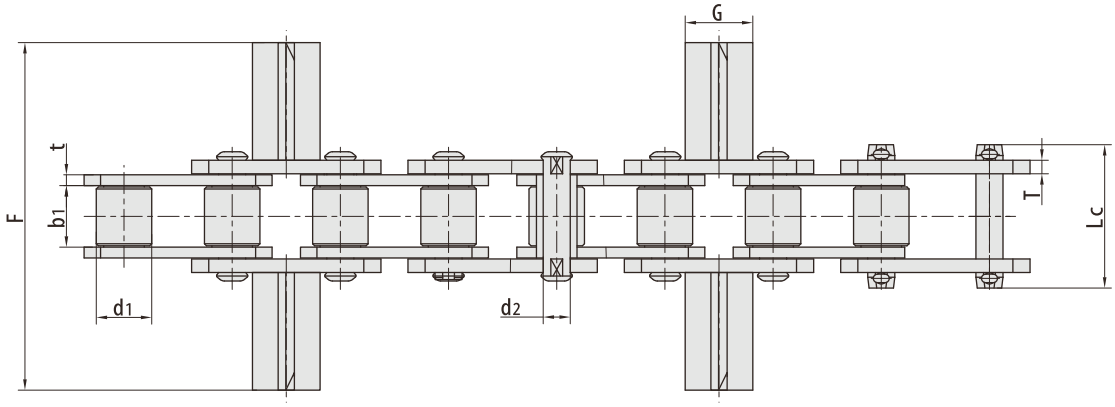

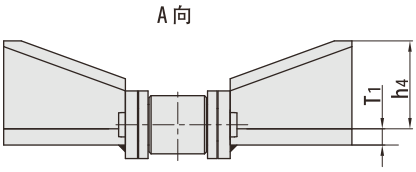

RBL chain number	Pitch	Roller diameter	Width between inner plates	Pin diameter	Pin length	Inner Plate depth	plate thickness	Atlachment dinension				Tensile strength	Weight
	P mm	d1 max mm	b1 min mm	d2 max mm	Lc max mm	h2 max mm	t/T mm	F mm	T1 mm	h4 mm	G mm	Q min kN/LBF	q kg/m
P80F53	80.00	42.00	45.00	20.00	94.00	50.00	8.00/10.00	259.00	12.00	65.00	50.00	180.0/40464	23.10

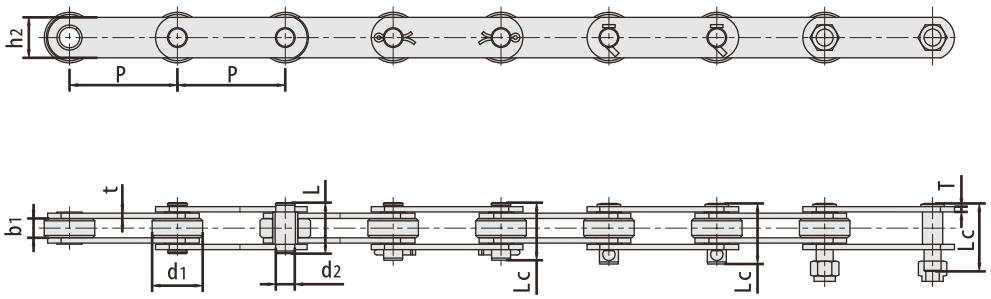

RBL chain number	Pitch	Roller diameter	Width between inner plates	plate depth	Pin diameter	Pin length		Plate thickness	Tensile strength	Average Tensile strength	Weight
	P mm	d1 max mm	b1 min mm	h2 max mm	d2 max mm	L max mm	Lc max mm	t/T max mm	Q min mm	Qo kN	q kg/m
P101.6F2	101.60	47.60	18.20	38.10	19.10	48.00	65.0	5.0	97.8/22000	107.58	6.75
P0101.6F12	101.60	47.50	19.00	40.00	19.10	45.80	52.5	5.0 A0	130.0/29224	143.00	6.84
P0101.6F15	101.60	66.70	26.00	50.00	26.90	65.80	87.0	7.1	200.0/45454	200.00	15.10
P152F5	152.40	66.70	25.40	50.00	26.90	61.20	80.0	7.1	134.0/30123	147.40	12.16
P152F14	152.40	47.60	18.20	38.10	19.10	48.00	52.0/50.5	5.0	89.0/20000	97.90	5.66
P152F17	152.40	66.70	25.40	50.80	27.00	67.50	95.0	8.0	163.3/36710	179.60	12.83
P152F29	152.40	66.70	25.40	50.80	27.00	69.50	111.5	9.0 AO	200.0/45454	220.00	13.54
P0152F1	152.40	88.90	38.10	70.00	32.00	93.80	101.5	12.0/9.5	444.53/99930	488.98	30.28
P0152F3	152.40	66.70	25.40	50.80	27.00	-	110.0	8.0	163.3/36710	180.00	13.50
P0152F4	152.40	69.85	38.10	57.15	21.84	101.00	110.0	12.7	440.0/98912	484.00	22.77
P0152F7	152.40	88.90	38.00	61.00	31.80	83.50	92.0	10.0/8.0	380.0/85242	418.00	23.50
P0152F17	152.40	66.70	25.40	50.80	27.00	67.50	78.0	8.0	163.3/36710	179.63	12.83
P0152F22	152.40	66.70	26.00	50.00	27.00	59.30	69.8	7.0/5.0	200.0A5454	220.00	10.90
P0152F23	152.40	66.70	26.00	50.00	26.90	61.80	69.1	7.1/5.1	200.0/45454	220.00	10.90
P0152F24	152.40	88.90	38.00	60.00	32.00	85.40	96.0	10.0/8.0	380.0/85242	418.00	23.00
P0152F25	152.40	88.90	38.00	60.00	32.00	89.40	120.3	10.0	380.0/85242	418.00	24.20
P0152F26	152.40	66.70	26.00	50.00	26.90	65.80	87.0	7.1	200.0/45454	220.00	11.90
P0152F27	152.40	66.70	25.40	50.80	27.00	71.50	99.0	9.0	267.0/60022	293.70	14.00

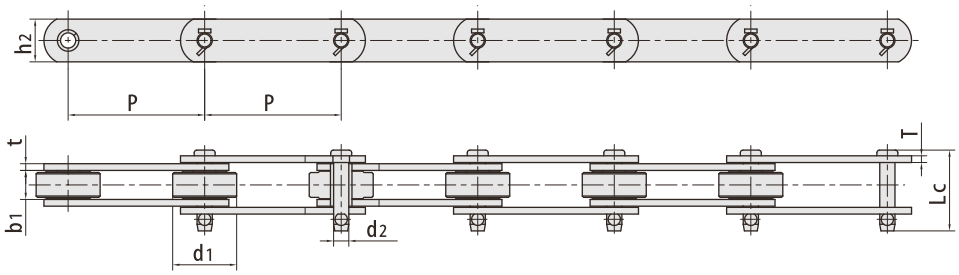

RBL chain number	Pitch P mm	Roller diameter d1 max mm	Width between inner plates b1 min mm	plate depth h2 max mm	Pin diameter d2 max mm	Pin length Lc max mm	Plate thickness t/T max mm	Tensile strength Q min mm	Average Tensile strength Qo kN	Weight q kg/m
P76.7	76.20	29.00	30.00	38.10	14.50	73.00	6.3	100.00/25000	110.00	8.25
90R-S	101.60	47.60	21.40	31.80	11.32	55.70	4.8	80.36/18065	88.40	5.90
P101.6F2 (e)	101.60	47.60	18.20	38.10	19.10	57.00	5.0	97.80/21985	107.58	6.94
P101.6F64	101.60	50.80	30.00	38.10	14.50	69.00	6.3	132.70/29831	146.00	7.30
P152F5 (b)	152.40	66.70	25.40	50.00	26.90	68.50	7.1/5.1	134.00/30123	147.40	11.50
P152F31	152.40	88.90	38.10	61.00	31.80	98.50	10.0	266.72/60000	293.00	26.60
P160F16	160.00	69.85	38.10	50.80	27.00	101.00	9.0/B.0	267.00/60022	293.70	16.60
P160F27	160.00	69.85	38.10	50.80	17.53	81.00	6.3	244.00/54851	268.40	13.68

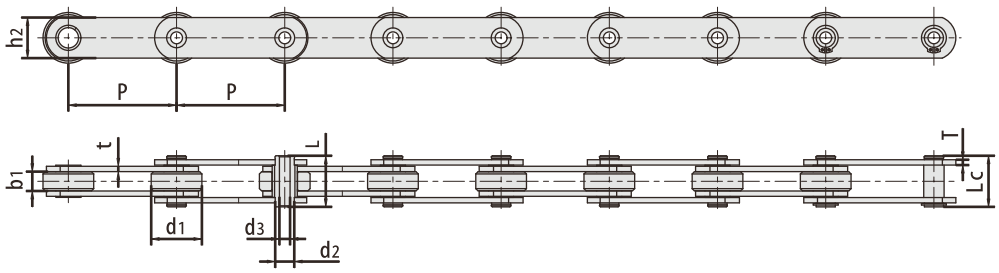

RBL chain number	Pitch P mm	Roller diameter d1 max mm	Width between inner plates b1 min mm	plate depth h2 max mm	Pin diameter d2 max mm	Pin diameter d3 min mm	Pin length L max mm	Pin length Lc max mm	Plate thickness t/T max mm	Tensile strength Q min mm	Average Tensile strength Qo kN	Weight q kg/m
P101.6F2-HP	101.60	47.60	18.20	38.10	19.10	13.20	44.8	46.5	5.0	66.68/14990	73.35	6.18
P152F3 (New)	152.40	66.70	25.40	50.80	27.00	20.10	65.5	67.0	8.0	163.30/36710	179.60	11.73
P152F29-HP	152.40	66.70	25.40	50.80	27.00	20.10	68.5	70.0	9.0/8.0	222.30/49973	244.53	12.40
P0152F6-HP	152.40	66.70	26.00	55.00	27.50	19.43	60.0	62.5	7.5/5.5	220.00/49456	242.00	11.10

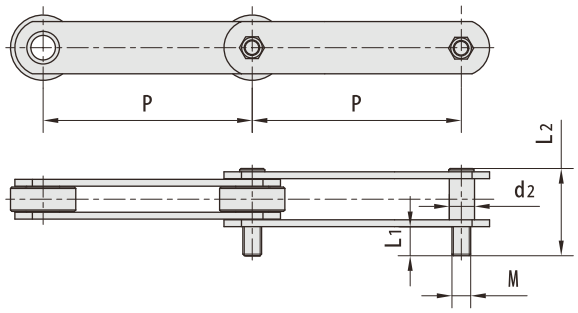

RBL chain number	Pitch P mm	Pin diameter d2 max mm	Diameter of thread M mm	Extended part size of the extended pin L1 mm	Pin length L2 max mm	Assembly method of the extended pin
P101.6F2	101.60	19.10	M 16	36.00	80.00	every lnk
P152F5	152.40	26.90	M 20	24.00	80.00	
P152F17	152.40	27.00	M 24	50.00	115.00	every 4 lhk
P0152F1	152.40	32.00	M 30	64.00	154.00	
P0152F3	152.40	27.00	M 20	45.00	110.00	every 6 lhk
P0152F4	152.40	21.84	0.75-UNC-2	88.10	134.10	
P0152F25	152.40	32.00	M 24	50.00	136.00	every 8 lnk etc

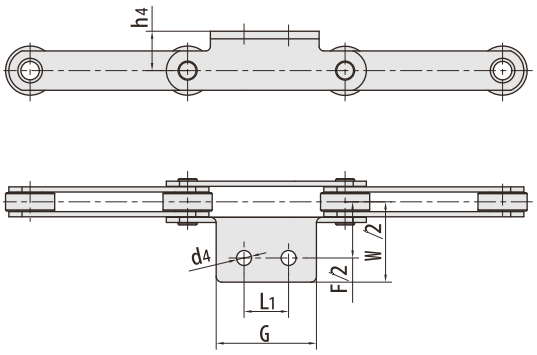

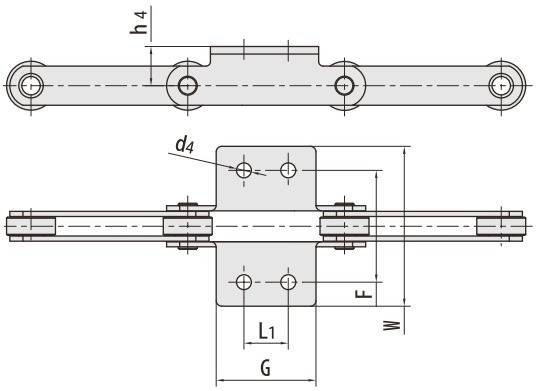

RBL chain number	P mm	L1 mm	G mm	F mm	W mm	d4 mm	h4 mm
90R-S	101.60	31.80	63.50	89.00	124.00	15.90	10.70
P101.6F2	101.60	31.80	71.60	88.80	123.40	31.80	10.70
P101.6F2K241)	101.60	40.00	70.00	78.00	105.00	32.00	11.50
P152F17	152.40	57.20	106.70	116.00	154.00	38.10	12.30
P152F29	152.40	57.20	106.70	118.00	156.00	38.10	12.30
P76.7	76.70	-	47.00	111.10	145.00	25.40	12.00

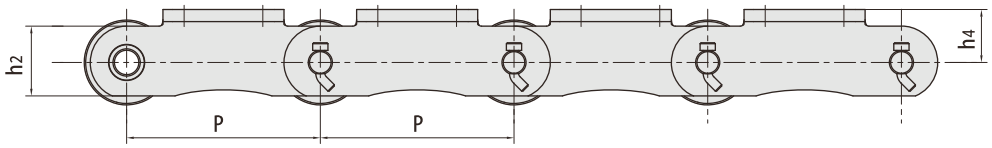

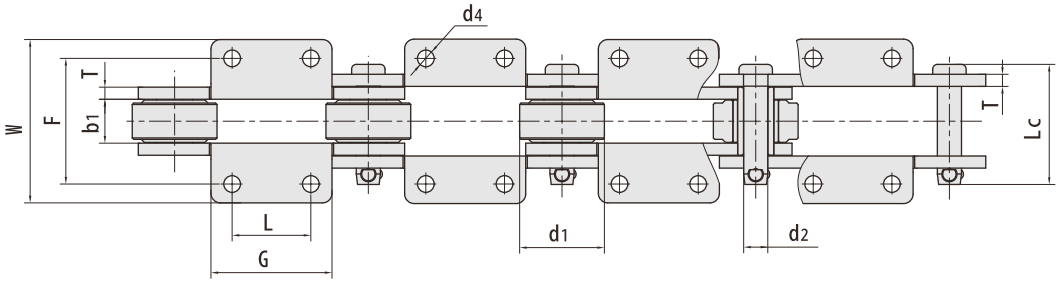

RBL chain number	Pitch P mm	Roller diameter d1 max mm	Width between inner plates b1 mm	Pin diameter d2 max mm	Pin length Lc max mm	plate depth h2 max mm	Plate thickness T max mm	Tensile strength Q min mm	Average Tensile strength Qo kN	Weight q kg/m
P152F68K2	152.4	69.85	37.1	22.23	111.2	57.2	12.70	413/92842	455.0	26.50
P152F97K2	152.4	76.20	38.1	26.90	116.6	60.3	12.70	450/101160	495.0	30.70
P152F101K2	152.4	69.85	37.1	18.90	96.6	54.1	9.52	311/69913	345.0	24.68
SM203.2F3K2	203.2	88.90	46.0	25.32	126.0	71.4	12.70	520/116900	545.0	37.70
SM203.2F4K2	203.2	88.90	46.0	25.32	126.0	73.2	12.70	585/131513	614.0	35.90
SM203.2F5K2	203.2	88.90	46.0	25.32	126.0	70.0	12.70	480/107908	504.0	37.60

RBL chain number	P mm	G mm	L mm	F mm	W mm	h4 mm	d4 mm
P152F68K2	152.4	114.3	76.2	111.10	151.5	41.30	14.30
P152F97K2	152.4	111.3	76.2	111.10	148.6	42.92	14.30
P152F101K2	152.4	139.7	76.2	111.20	169.1	41.40	14.20
SM203.2F3K2	203.2	152.4	82.6	131.76	182.6	55.50	19.05
SM203.2F4K2	203.2	127.0	82.6	131.76	171.4	55.50	17.50
SM203.2F5K2	203.2	152.4	82.6	133.80	191.0	54.50	19.05

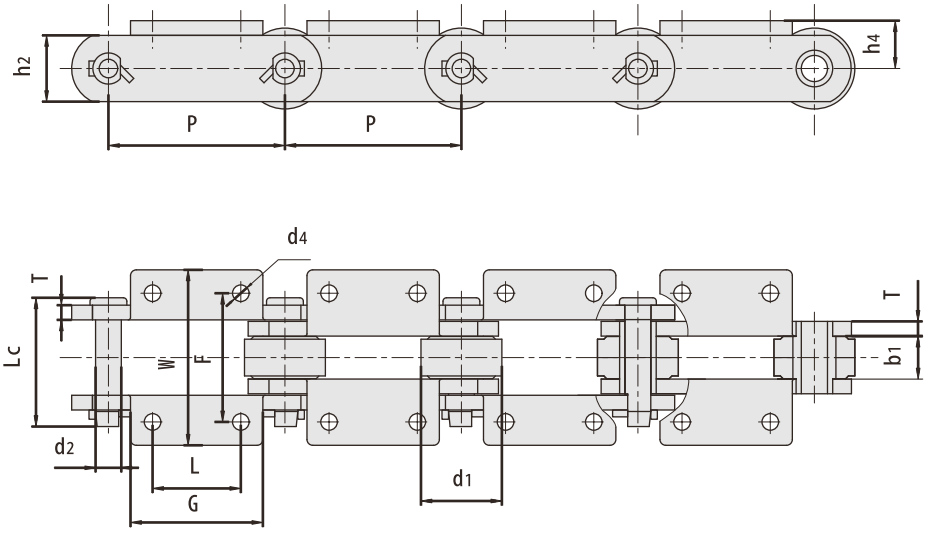

RBL chain number	Pitch P mm	Roller diameter d1 max mm	Width between inner plates b1 mm	Pin diameter d2 max mm	Pin length Lc max mm	plate depth h2 max mm	Plate thickness T max mm	Tensile strength Q min mm	Average Tensile strength Qo kN	Weight q kg/m
SM150F1K2	150.00	85.00	55.00	23.90	128.00	70.00	12.00	450.0/101160	495.0	44.50
D H 9063	152.40	76.20	38.10	23.83	103.20	61.00	10.30	445.0/100000	489.0	27.5
DH 2198	152.40	69.85	38.10	22.23	111.20	57.15	12.70	404.5/91000	445.0	27.9
P152F78K2	152.40	69.85	37.60	22.23	97.10	57.20	9.52	376.0/84500	410.0	26.2
P152F78K2F1	152.40	69.85	37.60	22.23	97.10	57.20	9.52	400.0/89920	440.0	26.68
P152F83K2	152.40	69.85	37.10	21.85	108.00	57.20	12.70	413.0/92842	454.3	28.50
P152F87K2	152.40	76.20	38.10	23.83	103.20	60.30	10.30	438.0/98462	481.8	28.45
P152F93K2	152.40	76.20	37.60	22.23	97.10	57.20	9.52	376.0/64500	410.0	26.2
P152F103	152.40	76.20	39.40	28.58	115.90	69.85	12.70	390.0/87672	429.0	34.50
SM152F25K2	152.40	50.80	30.00	11.10	69.00	38.10	6.40	80.0/17984	88.0	11.00
SM152F29K2	152.40	69.90	38.10	22.23	112.80	57.20	12.70	450.0/101160	495.0	28.70
SM152F33K2	152.40	76.20	38.10	27.00	112.00	60.50	12.70	400.0/69920	440.0	32.40
SM152F46K2	152.40	69.85	37.80	19.05	97.20	50.80	9.70	285.0/64068	311.3	24.20
SM152F57K2	152.40	76.20	38.10	22.23	100.00	57.20	9.50	350.0/78680	385.0	25.60
P203.2F8	203.20	88.90	45.30	25.40	123.00	71.40	12.70	615.0/138252	676.5	37.25
SM203.2F1K2	203.20	107.95	92.10	38.10	170.00	88.90	12.70	760.0/170848	836.0	67.68
SM203.2F15K2	203.20	88.90	46.00	25.40	120.90	69.90	12.70	444.8/99991	489.3	36.60
SM228.6F16K2	228.60	76.00	42.00	22.23	104.00	64.00	10.00	400.0/69920	440.0	28.00
SM304.8F18K2	304.80	101.60	69.85	34.80	163.80	88.90	16.00	1200.0/269760	1320.0	57.21

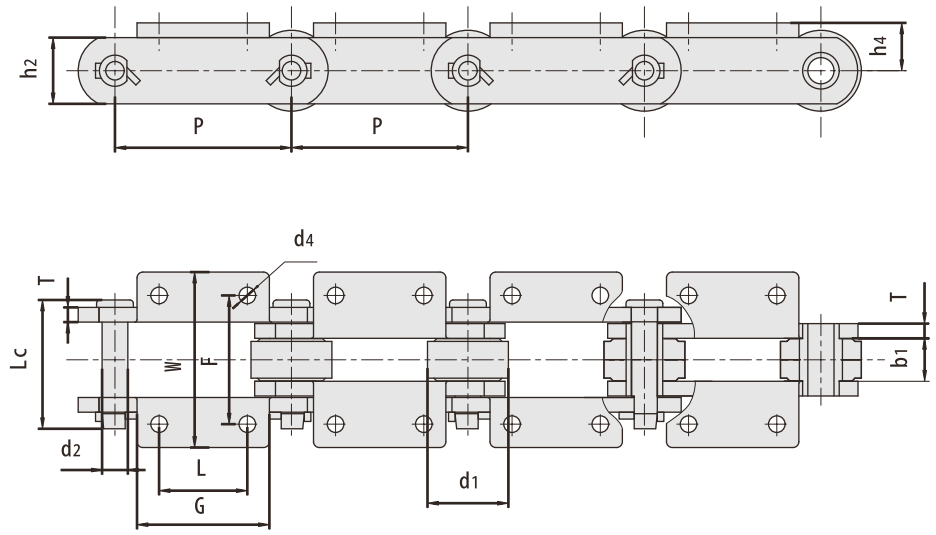

RBL chain number	P mm	6 mm	L mm	F mm	W mm	h4 mm	d4 mm
SM150F1K2	150.00	95.00	55.00	155.00	233.00	55.00	15.00
DH 9063	152.40	114.30	76.20	111.13	165.86	44.45	14.30
DH 2198	152.40	114.30	76.20	111.25	152.40	41.40	14.30
P152F78K2	152.40	114.30	76.20	111.00	165.00	41.30	14.00
P152F78K2F1	152.40	114.30	76.20	111.00	165.00	41.30	13.00
P152F83K2	152.40	111.00	76.20	111.60	152.20	41.30	14.30
P152F87K2	152.40	114.30	76.20	111.40	165.00	44.50	14.30
P152F93K2	152.40	110.00	76.20	111.00	146.00	44.50	14.30
P152F103	152.40	108.00	76.20	111.10	147.60	50.80	14.30
SM152F25K2	152.40	88.90	50.80	101.60	143.80	31.75	10.40
SM152F29K2	152.40	111.30	76.20	111.30	146.10	41.10	14.20
SM152F33K2	152.40	114.30	76.20	111.30	169.40	42.90	14.20
SM152F46K2	152.40	136.70	76.20	111.20	152.40	41.10	14.20
SM152F57K2	152.40	110.00	76.20	111.20	170.00	41.50	15.00
P203.2F8	203.20	165.00	114.30	132.00	183.00	55.50	17.50
SM203.2F1K2	203.20	146.00	82.60	193.70	260.30	69.90	17.50
SM203.2F15K2	203.20	127.00	82.60	131.80	183.40	55.60	17.50
SM228.6F16K2	228.60	152.00	100.00	156.50	222.50	42.00	14.00
SM304.8F18K2	304.80	203.20	152.40	203.20	257.80	69.85	17.50

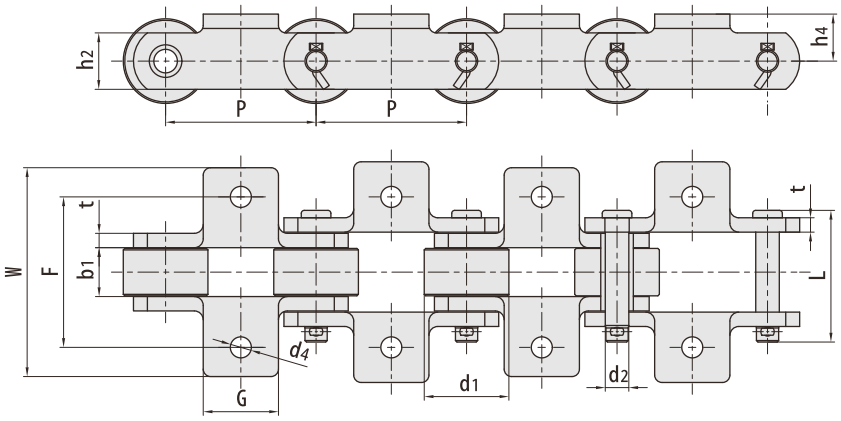

RBL chain number	Pitch P mm	Roller diameter d1 max mm	Width between inner plates b1 min mm	Pin diameter d2 max mm	Pin length L max mm	plate depth h2 max mm	Plate thickness t max mm	Tensile strength Q min mm	Weight q kg/m
SM101.6F19K1	101.60	57.15	33.00	15.90	88.90	38.10	9.70	176.4/39655	18.3

RBL chain number	P mm	G mm	F mm	W mm	h4 mm	d4 mm
SM101.6F19K1	101.60	50.80	101.60	141.00	31.75	14.20

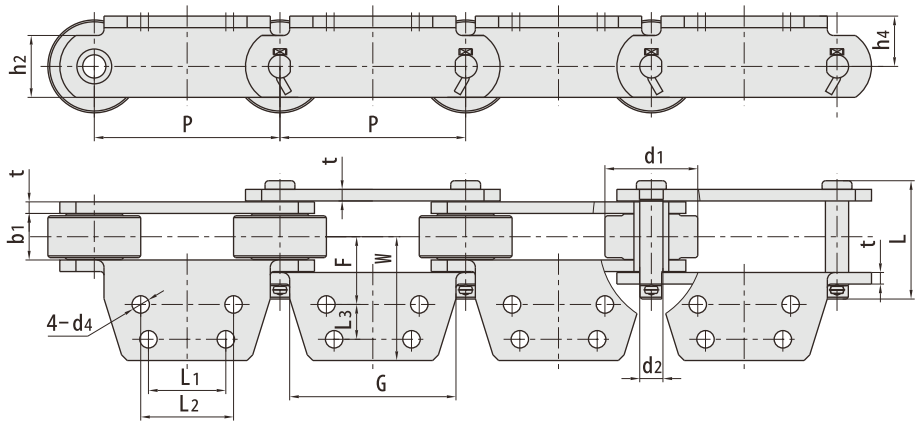

RBL chain number	Pitch P mm	Roller diameter d1 max mm	Width between inner plates b1 min mm	Pin diameter d2 max mm	Pin length L max mm	plate depth h2 max mm	Plate thickness t max mm	Tensile strength Q min mm	Weight q kg/m
SM152F63A4	152.4	76.2	38.1	19.05	97.1	38.1	9.5	285.0/64068	23.0

RBL chain number	P mm	G mm	F mm	W mm	h4 mm	d4 mm	L1 mm	L2 mm	L3 mm
SM152F63A4	152.4	136.50	55.60	101.60	41.30	14.30	63.5	76.20	28.58

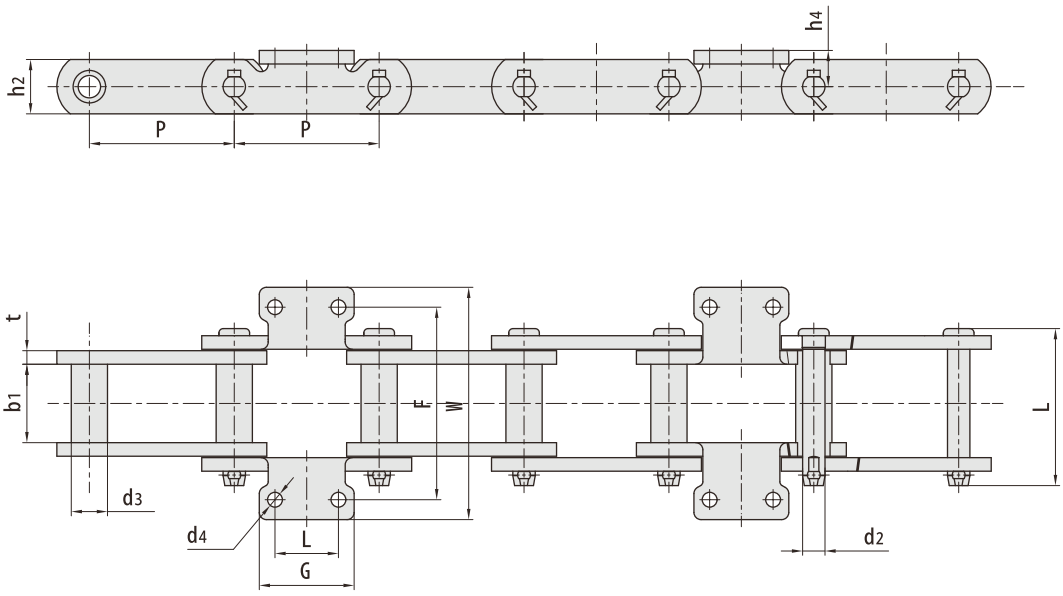

RBL chain number	Pitch P mm	Bush diameter d3 max mm	Width between inner plates b1 min mm	Pin diameter d2 max mm	Pin length L max mm	plate depth h2 max mm	Plate thickness t max mm	Tensile strength Q min mm	Weight q kg/m
S102BF6K2	101.60	25.40	54.00	15.70	110.50	38.10	9.50	160.0/35968	11.25
SM152F56K2	152.4	36.58	66.50	19.05	126.00	58.80	9.70	330.0/74184	17.26

RBL chain number	P mm	G mm	L mm	F mm	W mm	h4 mm	d4 mm
S102BF6K2	101.60	66.50	44.50	134.90	162.80	25.40	10.40
SM152F56K2	152.40	114.30	58.70	158.75	212.85	38.10	13.50

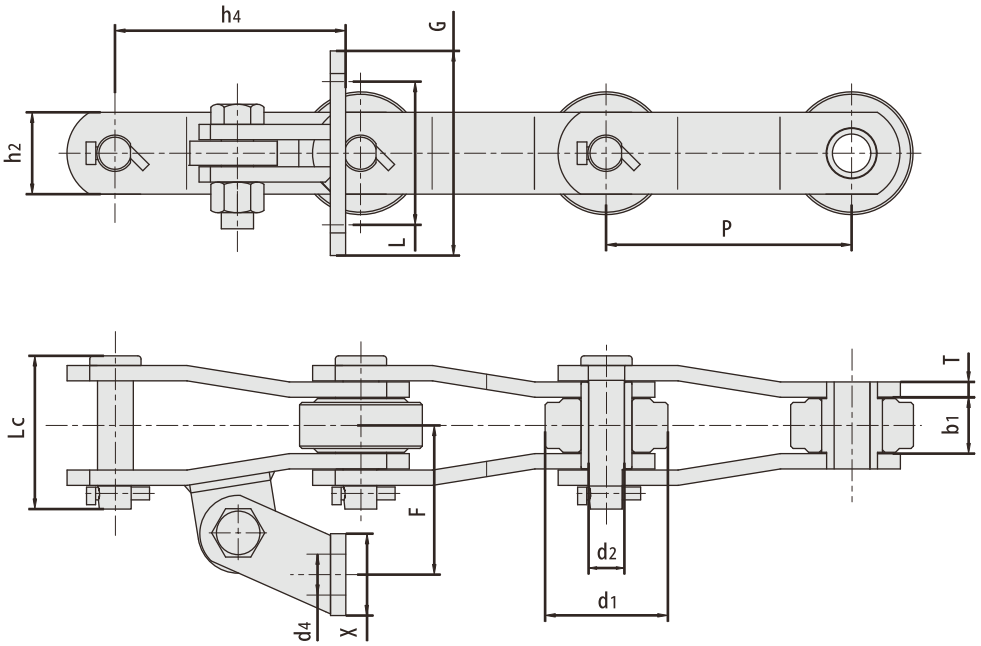

RBL chain number	Pitch P mm	Roller diameter d1 max mm	Width between inner plates b1 min mm	Pin diameter d2 max mm	Pin length L max mm	plate depth h2 max mm	Plate thickness T max mm	Tensile strength Q min mm	Average Tensile strength Qo kN
SM101.6F1—AS2	101.60	50.80	33.28	17.45	77.00	38.10	8.00	160.0/35968	176.0
SM101.6F10-AS2	101.60	50.80	32.60	17.50	83.00	44.50	7.90	138.1/31045	155.0
P152F77-AS2	152.40	76.20	34.50	22.23	95.10	50.80	9.52	263.0/59122	290.0
P152F87-AS2	152.40	76.20	38.10	23.83	103.20	60.30	10.30	438.0/98462	485.0
P152F146—AS2	152.40	76.20	39.80	23.83	113.00	63.50	12.70	453.6/101834	450.0
P152F153-AS2F1	152.40	70.00	34.60	22.23	95.80	57.00	10.00	263.0/59122	290.0
P152F154-AS2F1	152.40	72.00	34.96	18.85	73.80	50.80	9.52	250.0/56200	275.0
SM152F6-AS2	152.40	76.20	38.10	22.23	97.10	57.20	9.52	362.0/81377	400.0
SM152F14-AS2	152.40	76.20	34.90	22.20	96.35	55.80	9.50	362.6/81512	400.0
SM152F16-AS2	152.40	76.20	37.00	24.00	110.00	64.00	12.00	600.0/134880	660.0
SM152F31-AS2	152.40	76.20	34.96	22.23	97.50	50.80	9.53	328.0/73734	380.0
SM152F43-AS2	152.40	76.20	38.90	23.75	111.50	63.50	12.70	445.4/100126	490.0
P203.2F9	203.20	88.90	46.00	25.40	118.20	69.90	12.70	615.0/138252	680.0
SM203.2	203.20	88.90	41.30	30.16	130.00	69.90	15.00	700.0/157360	770.0
SM203.2F7-AS2	203.20	89.00	46.10	25.40	125.00	76.20	12.70	700.0/157360	770.0
SM203.2F18-AS2	203.20	88.90	46.10	25.40	123.00	70.00	12.70	620.0/139376	690.0

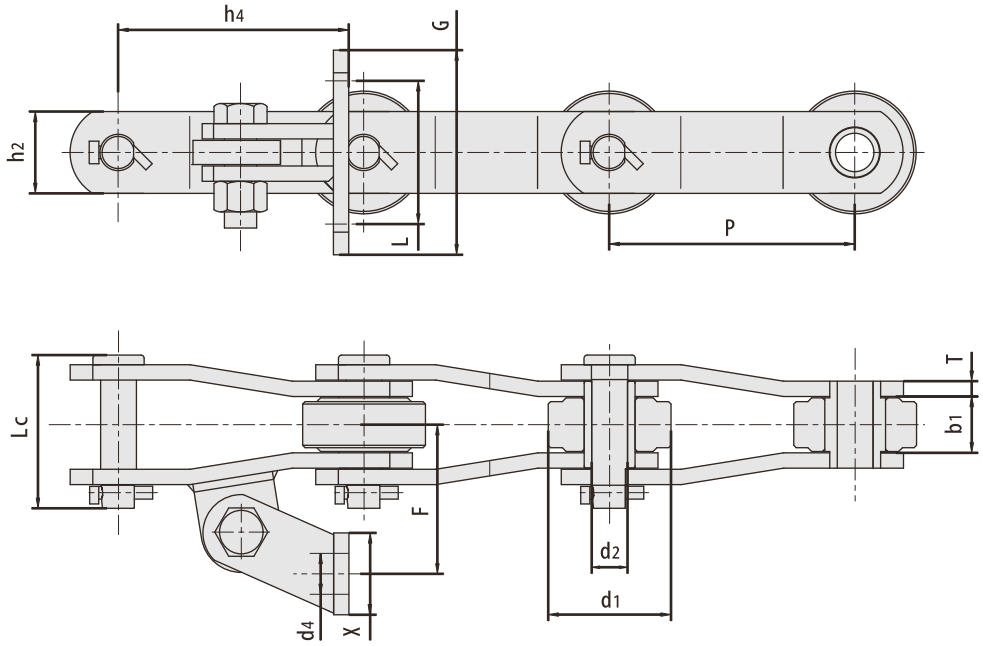

RBL chain number	P mm	G mm	L mm	F mm	X mm	h4 mm	d4 mm
SM 101.6F1-AS2	101.60	120.65	69.85	85.85	50.80	90.93	14.70
SM 101.6F10-AS2	101.60	111.00	84.10	74.60	44.50	80.90	11.10
P152F77-AS2	152.40	127.00	88.90	92.10	50.80	143.00	14.20
P152F87-AS2	152.40	127.00	88.90	100.00	50.80	143.00	14.20
P152F146-AS2	152.40	127.00	89.00	105.00	63.50	121.40	15.00
P152F153-AS2F1	152.40	122.00	84.00	95.84	50.00	113.20	14.00
P152F154-AS2F1	152.40	127.00	81.00	114.67	50.80	127.00	15.00
SM 152F6-AS2	152.40	127.10	88.90	92.10	50.80	143.00	14.30
SM 152F14-AS2	152.40	127.00	88.90	93.65	50.80	142.85	14.20
SM 152F16-AS2	152.40	127.00	89.00	97.00	50.80	142.80	14.00
SM 152F31-AS2	152.40	127.00	88.90	92.10	50.80	130.55	14.20
SM152F43-AS2	152.40	127.00	88.90	104.60	50.80	130.00	14.20
P203.2F9	203.20	127.00	88.90	107.10	50.80	168.40	14.20
SM 203.2	203.20	127.00	88.90	107.18	50.80	168.40	14.30
SM203.2F7-AS2	203.20	127.00	88.90	107.10	50.80	168.40	14.20
SM 203.2F18-AS2	203.20	127.00	88.90	107.10	50.80	168.30	14.20

With welded K2 attachment

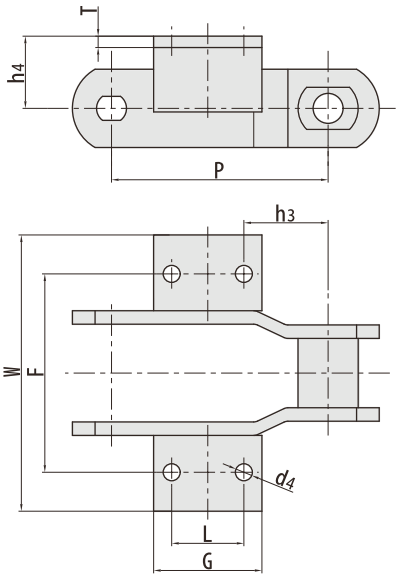

RBL chain number	P mm	F mm	W mm	L mm	G mm	h3 mm	h4 mm	d4 mm	T mm
SM228.6F3K2	228.6	209.6	291.3	76.2	114.3	88.9	76.2	18.0	12.0

With welded A2 attachment

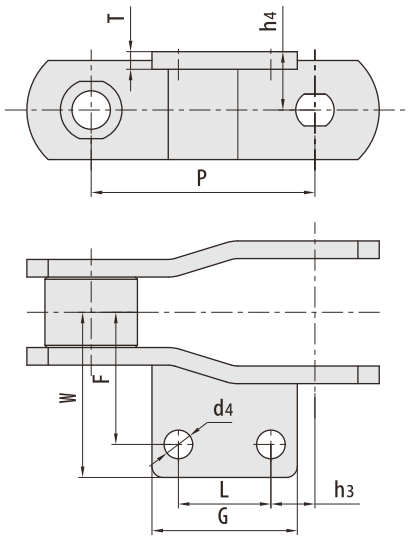

RBL chain number	P mm	F mm	W mm	L mm	G mm	h3 mm	h4 mm	d4 mm	T mm
SM 101.6F4A2	101.6	60	75	42	66	20	26.5	13.0	8.0

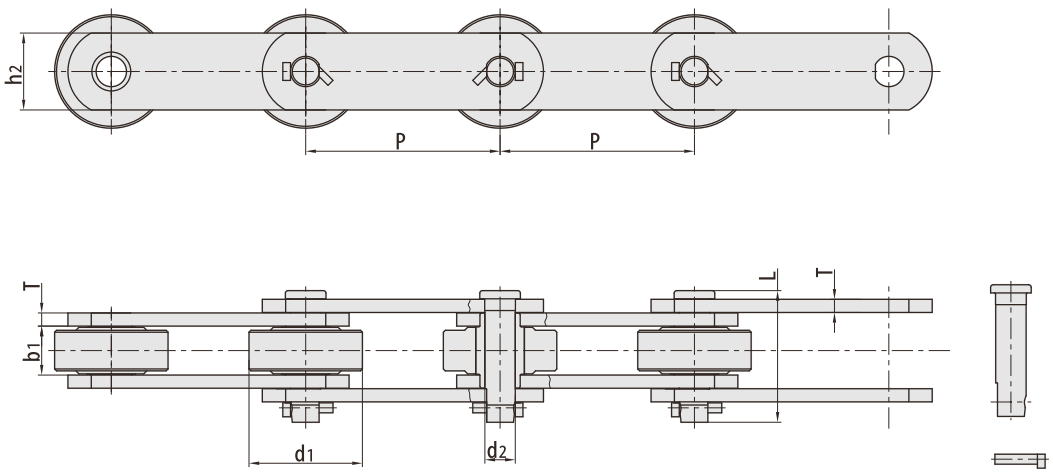

RBL chain number	Pitch P mm	Roller diameter d1 max mm	Width between inner plates b1 min mm	Pin diameter d2 max mm	Pin length L max mm	plate depth h2 max mm	Plate thickness T max mm	Tensile strength Q min mm	Average Tensile strength Qo kN	Weight q kg/m
P101.6F138*	101.60	30.00	40.00	19.00	100.00	45.00	9.50	250.0/56200	275.0	12.50
P152F78	152.40	69.85	38.10	22.23	97.10	57.20	9.52	400.0/89920	440.0	19.42
P152F88	152.40	88.90	38.10	23.83	103.20	60.30	10.30	438.0/98462	480.0	22.23
P152F114	152.40	70.00	37.10	25.00	98.00	75.00	9.52	600.0/134880	660.0	24.60
P152F156	152.40	69.85	38.10	18.90	96.60	57.00	9.52	378.1/85001	416.0	18.95
SM 152F2	152.40	69.85	38.10	18.90	96.60	50.80	9.52	350.0/78680	385.0	17.27
SM152F5	152.40	76.20	38.10	23.80	103.00	63.50	10.30	438.0/98462	480.0	19.89
SM152F7	152.40	76.20	37.10	25.00	110.80	65.00	12.00	500.0/112400	550.0	26.42
DH2600	152.40	88.90	67.46	25.35	125.90	76.20	9.52	606.0/136229	670.0	37.10
SM203.2F11	203.20	89.90	46.00	25.40	124.00	76.20	12.70	690.0/155112	760.0	32.30

*Bush chain: d1 in the table indicates the external diameter of the bush.

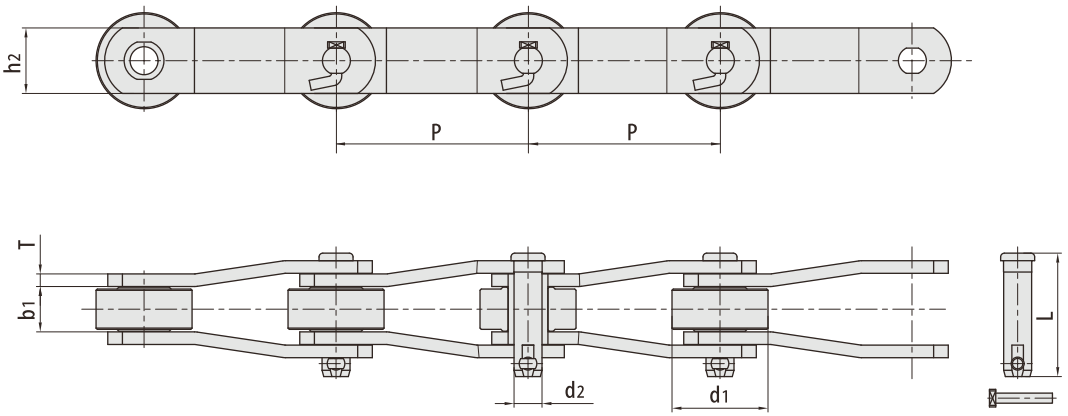

RBL chain number	Pitch P mm	Roller diameter d1 max mm	Width between inner plates b1 min mm	Pin diameter d2 max mm	Pin length L max mm	plate depth h2 max mm	Plate thickness T max mm	Tensile strength Q min mm	Average Tensile strength Qo kN	Weight q kg/m
SM 102*	102.00	36.00	42.00	16.00	92.00	45.00	8.00	210.0/47208	230.0	11.59
SM 101.6F4*	101.60	42.00	32.00	17.50	83.00	45.00	8.00	281.5/63281	309.7	12.30
SM 101.6F7*	101.60	36.50	41.30	15.88	94.30	44.50	7.90	191.1/42959	210.0	11.84
SM 101.6F10	101.60	50.80	32.60	17.50	83.00	44.50	7.90	138.1/31045	151.9	13.29
P152F77	152.40	76.20	35.00	22.23	95.10	50.80	9.52	263.0/59122	290.0	17.98
P152F151	152.40	76.20	36.00	22.20	98.00	52.00	10.00	361.3/81220	397.4	19.10
SM 152F16	152.40	76.20	37.00	24.00	110.00	64.00	12.00	600.0/134880	660.0	26.20
SM 152F54	152.40	76.20	35.00	22.43	96.00	50.80	9.50	263.0/59122	290.0	17.90
SM203.2F8	203.20	88.90	46.10	25.40	122.00	76.20	12.70	700.0/157360	770.0	31.10
SM228.6F3*	228.60	63.50	73.20	31.75	157.00	82.60	14.20	250.0/56200	275.0	33.60
SM228.6F4	228.60	89.00	37.00	25.40	102.00	65.00	10.00	466.0/104756	512.5	21.20
SM228.6F6	228.60	99.00	46.00	32.00	137.00	86.00	16.00	1150.0/258520	1265.0	41.80
SM228.6F8	228.60	99.00	47.00	32.00	126.00	86.00	12.70	920.0/206816	1012.0	34.20

*Bush chain: d1 in the table indicates the external diameter of the bush.

With welded As2 attachment

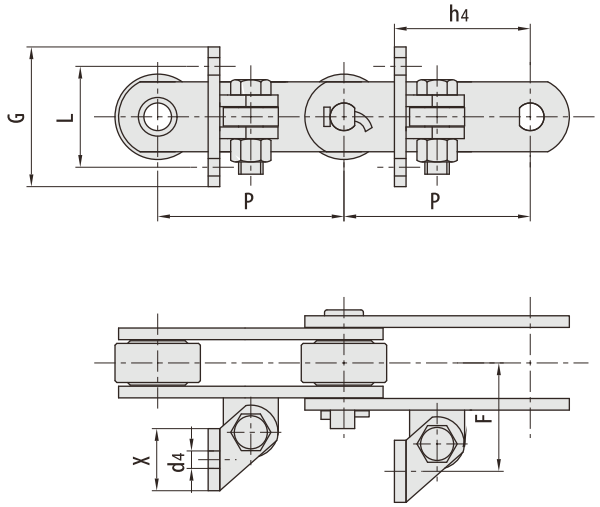

RBL chain number	P mm	G mm	L mm	F mm	X mm	h4 mm	d4 mm
P152F78-AS2	152.40	114.30	82.55	88.90	50.80	111.12	14.30
DH2600-AS2	152.40	127.00	88.90	120.70	50.80	143.00	14.20
DH2600-AS2F2	152.40	127.00	88.90	120.60	50.80	146.00	13.50

With welded F3 attachment

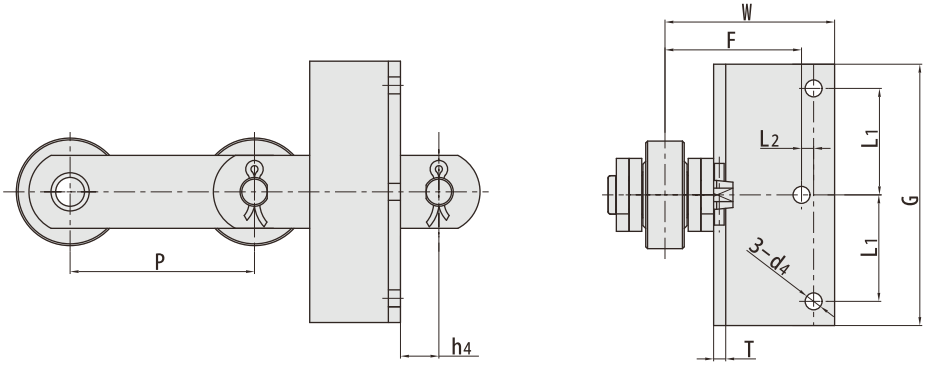

RBL chain number	P mm	F mm	W mm	h4 mm	d4 mm	G mm	L1 mm	L2 mm
P152F88-F3	152.40	112.80	140.10	31.75	14.00	216.00	88.00	10.00

With A1 attachment

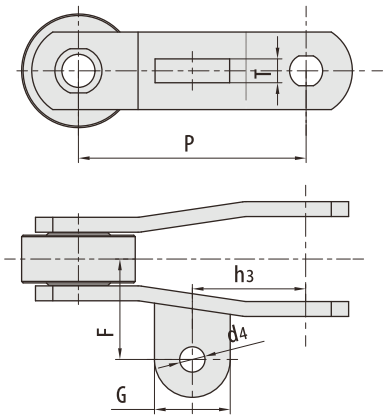

RBL chain number	P mm	F mm	G mm	d4 mm	h3 mm	T mm
SM 101.6F5-A1	101.6	70.0	40.0	17.0	42.0	12.0
SM 101.6F7-AS2	101.6	63.6	38.1	13.0	50.0	9.5
SM 101.6F10-A1	101.6	54.0	42.0	16.7	50.8	12.7
P152F77-AS2F3	152.4	66.7	65.0	17.0	76.2	16.0
P152F148-AS2	152.4	68.0	-	22.0	74.0	16.0
P152F151-A1	152.4	67.5	50.8	17.0	76.0	16.0
SM228.6F4-AS2	228.6	80.0	-	21.0	95.0	20.0
SM228.6F8-AS2	228.6	83.0	-	21.0	120.0	16.0
SM203.2F7-A1F1	203.2	81.7	58.0	20.0	101.6	16.0
SM203.2F8-AS2	203.2	82.0	-	21.0	102.0	16.0

With A2 attachment

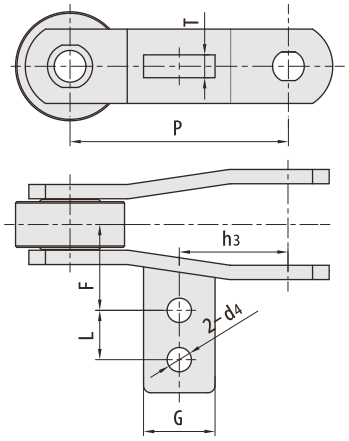

RBL chain number	P mm	F mm	G mm	d4 mm	h3 mm	L mm	T mm
P152F77-A2	152.4	60.0	50.0	17.0	76.0	34.5	16.0
P152F151-A2	152.4	60.0	50.0	17.0	76.0	34.5	16.0
SM 152F54-A2	152.4	60.0	50.0	17.0	76.0	34.5	16.0
SM203.2F8-AS2F3	203.8	74.5	65.0	21.0	102.0	34.5	15.0
SM203.2F8-AS2F5	203.8	74.5	65.0	21.0	102.0	50.0	15.0

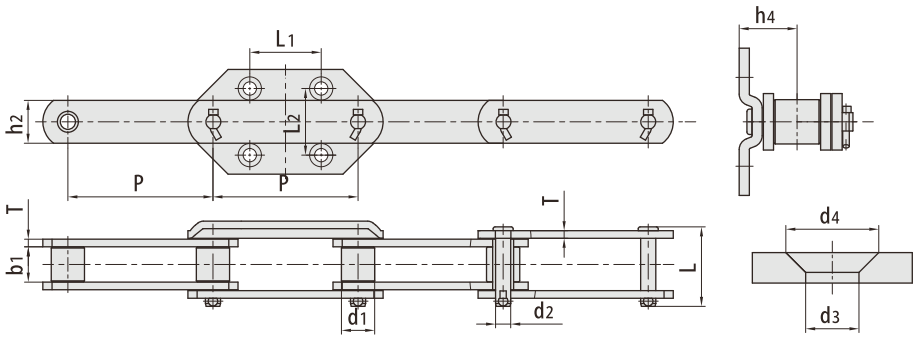

RBL chain number	Pitch P mm	Roller diameter d1 max mm	Width between inner plates b1 min mm	Pin diameter d2 max mm	Pin length L max mm	plate depth h2 max mm	Plate thickness T max mm	Tensile strength Q min mm	Weight q kg/m
P152F169SS-G 4	152.4	34.9	37.1	15.9	83.5	44.5	8.0	190/42712	10.34

RBL chain number	P mm	L1 mm	L2 mm	h4 mm	d3 mm	d4 mm
P152F169SS-G4	152.4	75.0	70.0	46.0	14.0	24.4

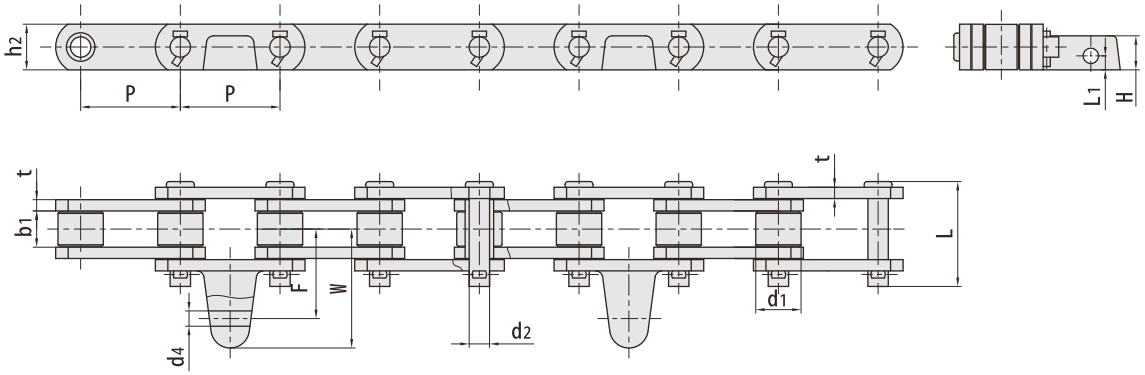

RBL chain number	Pitch P mm	Roller diameter d1 max mm	Width between inner plates b1 min mm	Pin diameter d2 max mm	Pin length L max mm	plate depth h2 max mm	Plate thickness t max mm	Tensile strength Q min mm	Weight q kg/m
P69.85F6-G19	69.85	31.75	25.3	14.27	73.5	31.75	8.0	130.049224	9.46

RBL chain number	P mm	F mm	W mm	d4 mm	L1 mm	H mm
P69.85F6-G19	69.85	62.27	80.8	11.0	9.8	24

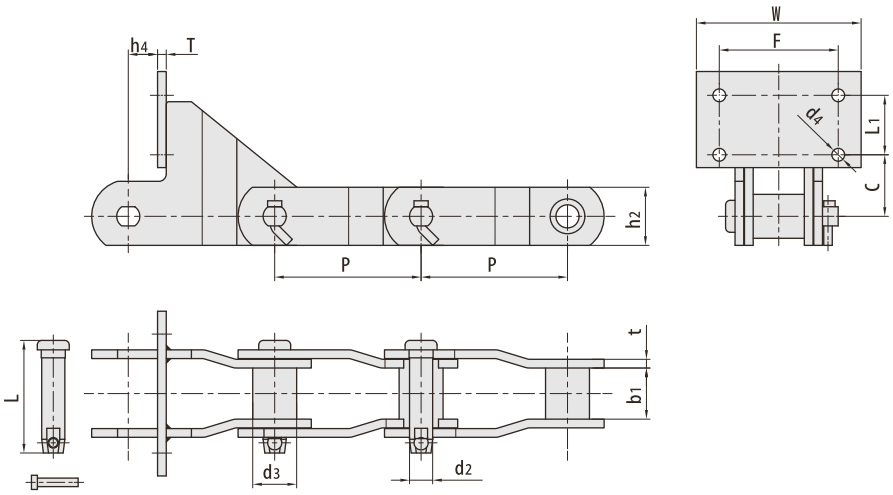

RBL chain number	Pitch	Bush diameter	Width between inner plates	Pin diameter		plate dimension		Atlachment dinension						Tensile strength
	P mm	d3 max mm	b1 min mm	d2 max mm	L max mm	h2 mm	t/T mm	F mm	W mm	h4 mm	d4 mm	C mm	L1 mm	Q min kN/LBF
SM 160F4	160.0	48.0	55.7	25.27	123.03	63.5	9.5	130.0	180.0	32.0	14.0	132.3	65.0	400/89920
SM200F1-PUSHER	200.0	48.0	55.7	25.27	123.03	63.5	9.5	120.0	158.8	76.2	14.0	91.0	50.0	350/78680

With SD attachment

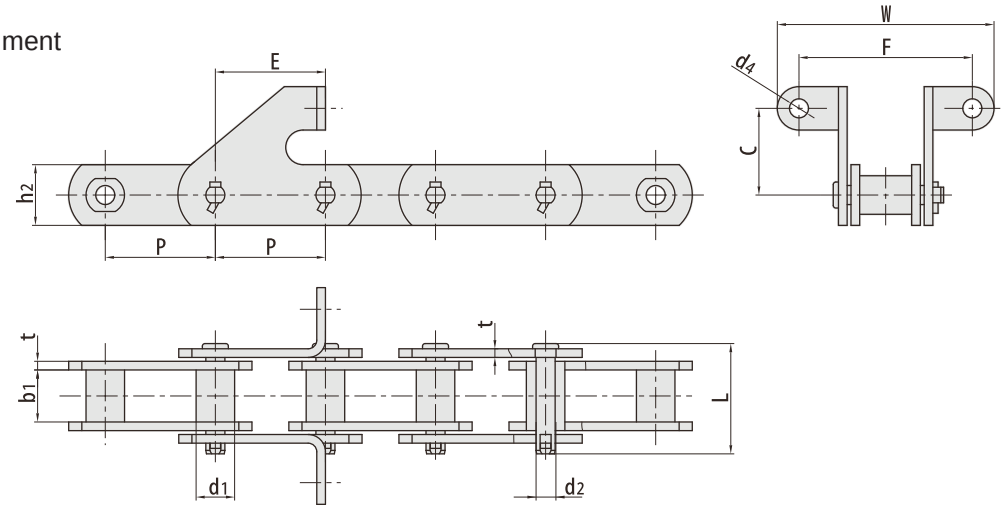

RBL chainnumber	Pitch	Roller diameter	Width between inner plates	Pin diameter	Pin length	plate depth	Plate thickness	Attachment dimemsion					Tensile strength
	P mm	d1 max mm	b1 mm	d2 max mm	L max mm	h2 mm	t max mm	F mm	W mm	d4 mm	C mm	E mm	Q min kN/LBF
SM 63.55 D	63.5	22.22	30.0	11.0	63.5	35.0	5.0	100.0	125.0	11.0	35.0	63.5	80/17984
SM 76.25D	72.6	22.22	25.4	11.0	59.0	35.0	5.0	93.0	118.0	11.0	50.0	76.2	100/22480

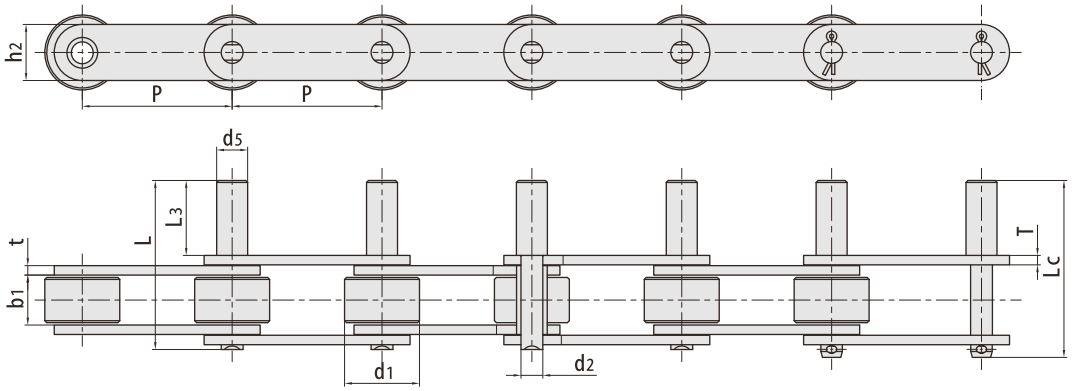

RBL chain number	Pitch	Roller diameter	Width between inner plates	Pin diameter					plate dimension		Tensile strength	Weight
	P mm	d1 max mm	b1 mm	d2 max mm	d5 max mm	L max mm	Lc max mm	L3 mm	h2 mm	t/T mm	Q min mm	q kg/m
P76.2F72-D 3	76.2	38.1	25.2	11.1	15.75	86	90.1	38.1	28.5	4.8	58/13038	6.3

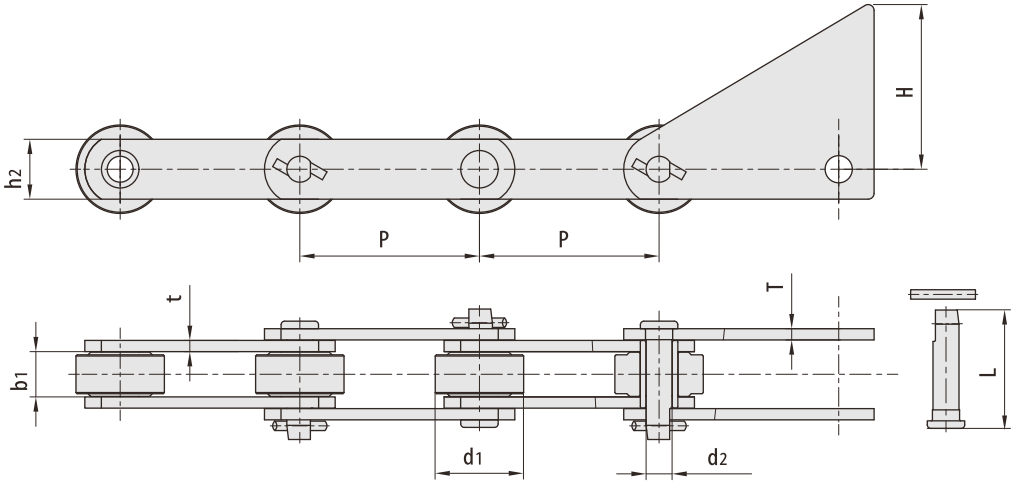

RBL chain number	Pitch	Roller diameter	Width between inner plates	Pin diameter		plate dimension			Tensile strength
	P mm	d1 max mm	b1 mm	d2 max mm	L max mm	h2 mm	t/T mm	H	Q min mm
P100F243	100.0	56.00	30.0	16.00	76.0	45.0	8.00	100.0	240/53952
S102BF7*	101.6	25.40	54.0	15.70	110.5	38.1	9.50	95.3	160/35968
S111F4*	120.9	36.58	66.5	19.05	126.0	50.8	9.70	50.8	214/48107
SM 152F11	152.4	75.00	38.4	22.08	100.4	50.8	9.53	139.7	260/58448

*Bush chain: d1 in the table indicates the external diameter of the bush.

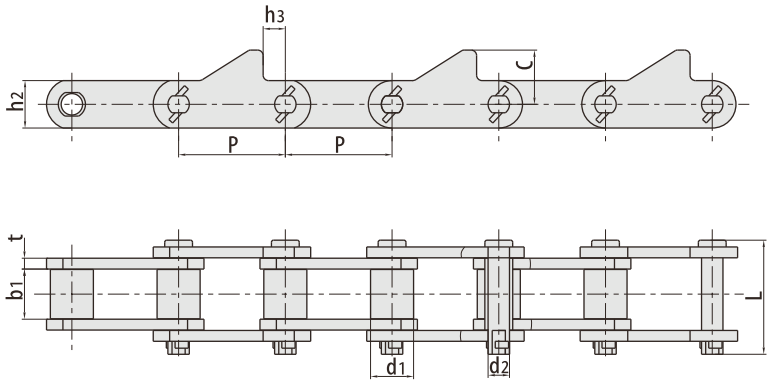

RBL chain number	Pitch	Roller diameter	Width between inner plates	Pin diameter		plate dimension				Tensile strength	Weight
	P mm	d1 max mm	b1 mm	d2 max mm	L max mm	h2 mm	t mm	h3 mm	c mm	Q min mm	q kg/m
P78.11F25	78.11	32.60	37.0	15.90	89.00	38.0	8.0	11.6	58.0	190/42715	12.2
SM78.75F1	78.75	31.75	37.0	15.88	87.00	38.0	8.0	16.4	41.0	140/31472	10.9

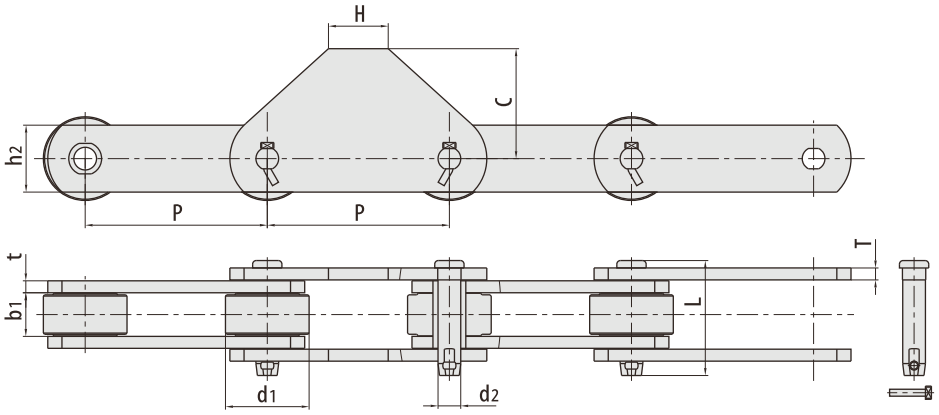

RBL chain number	Pitch	Roller diameter	Width between inner plates	Pin diameter		plate dimension				Tensile strength
	P mm	d1 max mm	b1 mm	d2 max mm	L max mm	h2 mm	t/T mm	C mm	H mm	Q min mm
SM 152F59	152.4	70.00	36.5	17.00	96.2	56.0	10.0	92	50.0	380/85424

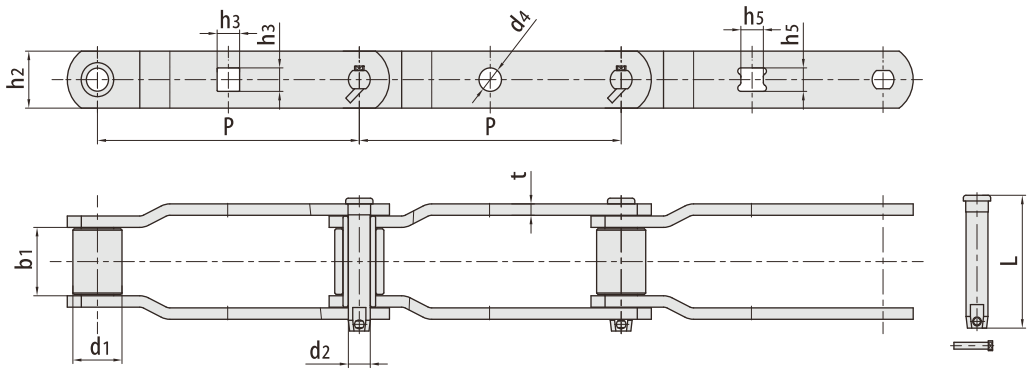

RBL chain number	Pitch	Roller diameter	Width between inner plates	Pin diameter		plate dimension					Tensile strength	Weight
	P mm	d1 max mm	b1 min mm	d2 max mm	L max mm	h2 mm	t mm	h3 mm	h5 mm	d4 mm	Q min mm	q kg/m
SM 228.6F14	228.6	44.45	49.30	22.23	190.80	63.5	12.70	-	26.1	-	454/102059	18.50
SM 304.8	304.8	82.55	93.70	40.87	198.05	101.6	19.05	-	-	37.69	1500/33720	51.96
SM304.8F1	304.8	82.30	93.70	47.37	208.76	114.3	19.05	32.54	-	-	880/197824	61.41
SM 304.8F3	304.8	44.45	56.90	22.10	117.70	63.5	9.65	23.11	-	-	450/101160	13.70
SM304.8F4	304.8	57.15	76.20	25.48	148.05	63.5	12.70	26.16	-	-	520/116896	19.76
SM304.8F5	304.8	63.50	69.85	31.75	162.54	88.9	15.90	32.54	-	-	1100/24728	33.48
SM 304.8F11	304.8	88.90	105.00	38.10	195.60	101.6	15.70	-	32.5	-	1230/27650	49.62
SM304.8F13	304.8	57.15	76.20	25.30	148.20	63.5	12.70	-	26.0	-	520/116896	19.90

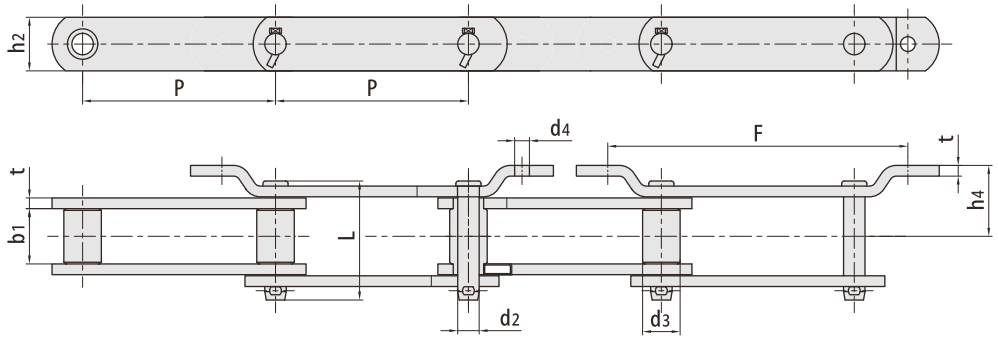

RBL chain number	Pitch	Bush diameter	Width between inner plates	Pin diameter		plate dimension					Tensile strength	Weight
	P mm	d3 max mm	b1 mm	d2 max mm	L max mm	h2 mm	t mm	h4 mm	F mm	d4 mm	Q min mm	q kg/m
SM228.6F11	228.6	44.45	63.50	25.40	141.00	63.5	12.70	84	355.6	17.5	543/122066	21.83

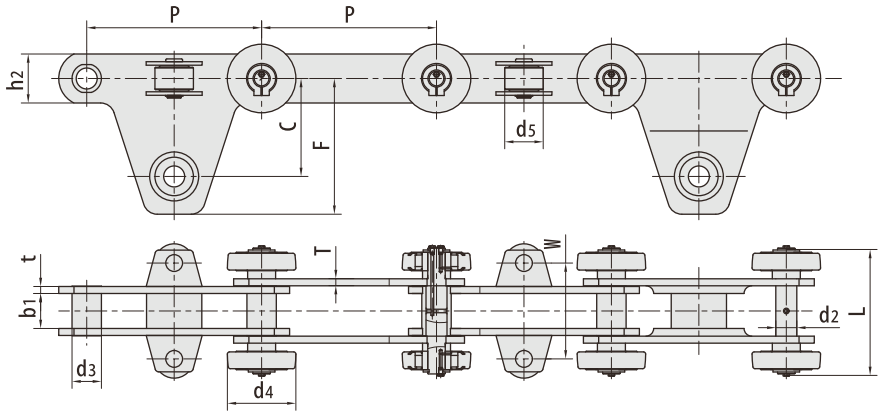

RBL chain number	Pitch	Bush diameter	Width between inner plates	Pin diameter	Pin length	inner plate depth	Plate thickness	Attachment dimension					Tensile strength
	P mm	d3 max mm	b1 min mm	d2 max mm	L max mm	h2 mm	t/T mm	C mm	F mm	W mm	d4 mm	d5 mm	Q min mm
M450F16-B-250	250.0	42.0	55.0	30.0	182.0	70.0	10.0	140.0	194.0	145.0	98.0	50.0	370.0/S3176
M450F20-B-250	250.0	42.0	50.0	30.0	180.0	70.0	10.0	140.0	194.0	137.0	98.0	55.0	500.0/112400
M450F22-B-250	250.0	42.0	55.0	30.0	178.0	70.0	10.0	140.0	194.0	145.0	98.0	42.0	480.0/107904

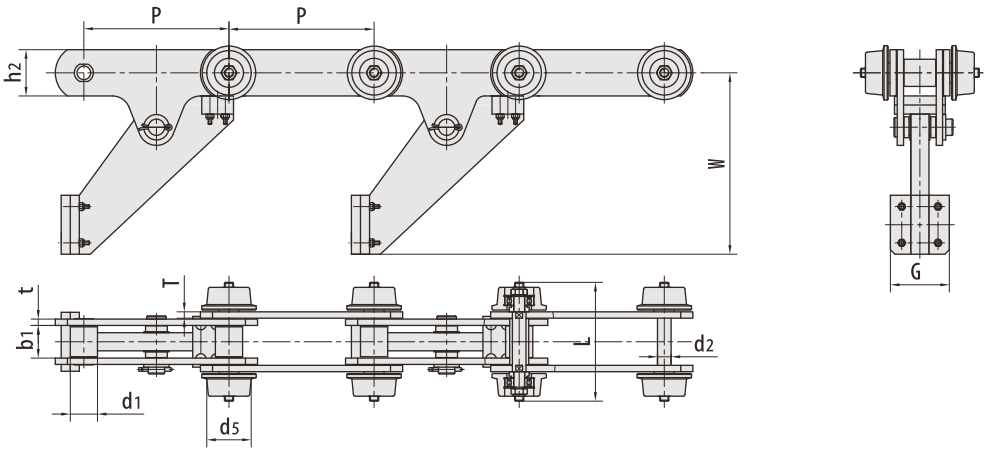

RBL chain number	Pitch	Roller diameter	Width between inner plates	Pin diameter	Pin length	inner plate depth	Plate thickness	Attachment dimension			Tensile strength
	P mm	d1 max mm	b1 min mm	d2 max mm	L max mm	h2 mm	t/T mm	C mm	W mm	d5 mm	Q min mm
M 160F53SR2-S-160	160.00	30.00	36.00	15.00	131.00	51.00	7.00	65.0	200.0	49.0	160.0/35988

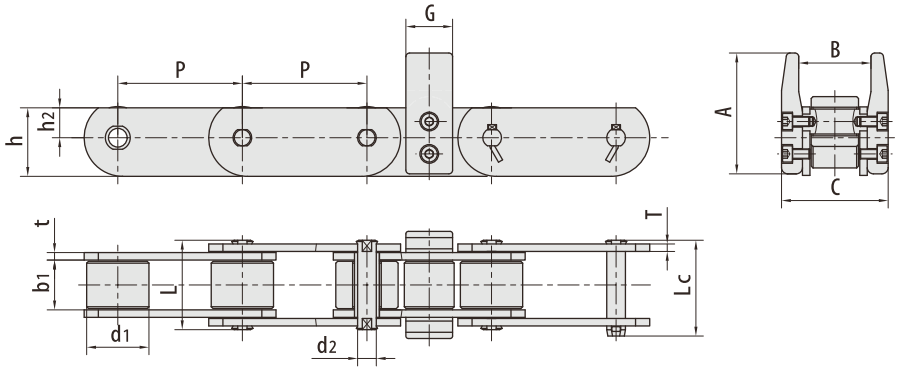

RBL chain number	Pitch	Roller diameter	Width between inner plates	Pin diameter	Pin length		inner plate depth		Plate thickness	Attachment dimension				Tensile strength	Weight
	P mm	d1 max mm	b1 min mm	d2 max mm	L max mm	Lc max mm	h2 mm	h mm	t/T mm	A mm	B mm	C mm	G mm	Q min mm	q kg/m
P100F298	100.0	50.0	40.0	15.0	79.8	84.9	24.0	55.0	8.0	87.0	70.0	90.0	37.5	200.0/44960	16.0
P100F337	100.0	50.0	40.0	12.0	71.0	76.5	24.0	55.0	6.0	87.0	60.0	86.0	40.0	120.0/26976	37.0
P100F339	100.0	50.0	40.0	15.0	71.8	76.9	24.0	55.0	6.0	97.0	58.0	86.0	40.0	120.0/26976	14.0
P125F86	125.0	50.0	40.0	18.0	71.8	76.9	24.0	55.0	6.0	97.0	58.0	86.0	40.0	120.0/26976	13.8

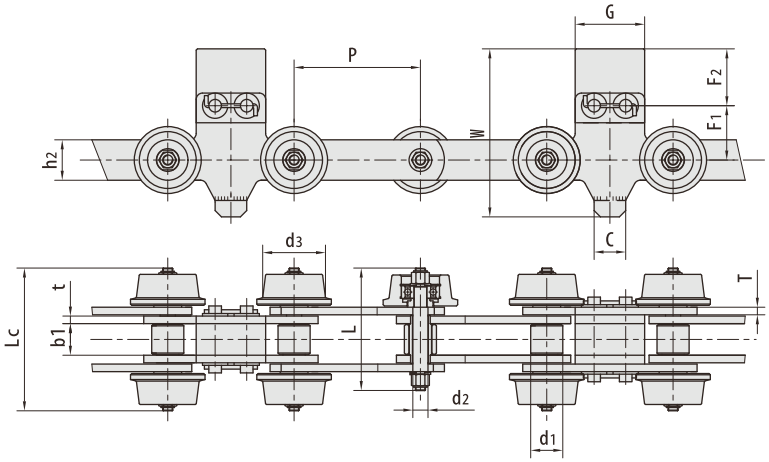

RBL chain number	Pitch	Roller diameter	Width between inner plates	Pin diameter	Pin length		inner plate depth	Plate thickness	Attachment dimension						Tensile strength
	P mm	d1 max mm	b1 min mm	d2 max mm	L max mm	Lc max mm	h2 mm	t/T mm	C mm	F1 mm	F2 mm	G mm	W mm	d3 mm	Q min mm
P100F202	100.0	25.4	24.5	12.0	-	113.0	32.0	6.0	25.0	36.0	27.5	46.0	106.0	45.0	126.0/28324
P100F240	100.0	25.4	24.5	12.0	97.0	113.0	32.0	6.0	25.0	43.0	30.0	55.0	118.0	45.0	80.0/17984
P100F246	100.0	25.4	24.5	12.0	93.5	113.0	32.0	6.0	25.0	36.0	34.0	45.0	112.5	45.0	126.0/28324
P100F247	100.0	25.4	24.5	12.0	93.5	113.0	32.0	6.0	25.0	36.0	28.0	34.0	106.5	45.0	126.0/28324
P100F348	100.0	25.4	25.0	12.0	97.0	113.0	32.0	6.0	25.0	43.0	45.0	55.0	133.0	49.7	80.0/17984

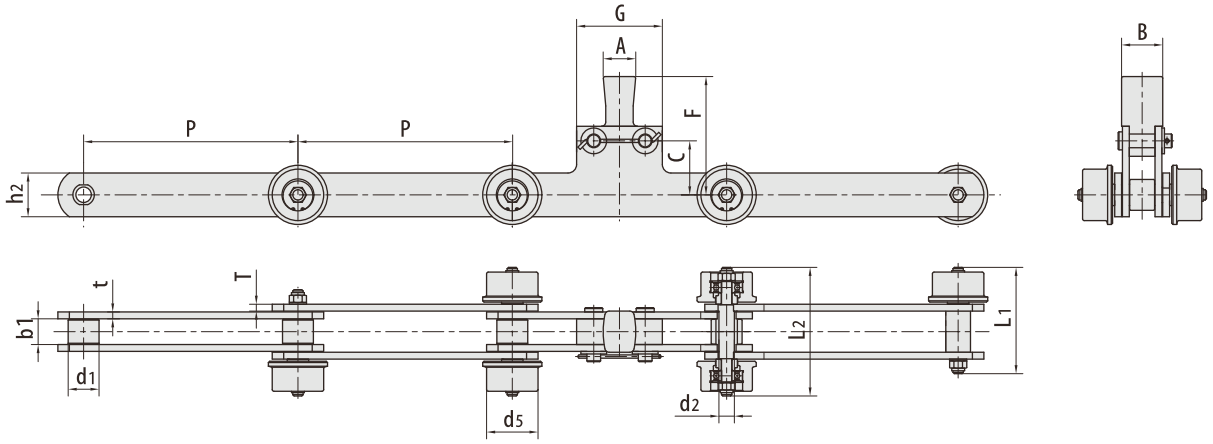

RBL chain number	Pitch	Roller diameter	Width between inner plates	Pin diameter	Pin length		inner plate depth	Plate thickness	Attachment dimension						Tensile strength
	P mm	d1 max mm	b1 min mm	d2 max mm	L1 max mm	L2 max mm	h2 mm	t/T mm	A mm	B mm	C mm	F mm	G mm	d5 mm	Q min mm
M160F35-S-200	200.0	36.0	30.0	18.0	123.0	152.0	51.0	8.0	38.0	48.0	63.0	138.0	100.0	59.5	160.0/35968
M160F37-S-250	250.0	36.0	30.0	18.0	124.0	150.0	51.0	8.0	38.0	48.0	63.0	138.0	100.0	60.0	160.0/35968
M160F52-S-250	250.0	36.0	30.0	18.0	126.0	150.0	51.0	8.0	38.0	48.0	63.0	138.0	100.0	65.0	160.0/35968
M450F8-S-200	200.0	60.0	44.0	30.0	162.5	190.0	82.0	12.0	38.0	55.0	65.0	140.0	140.0	84.7	450.0/101160
M450F17-S-200	200.0	60.0	44.0	30.0	165.5	190.0	82.0	12.0	38.0	55.0	65.0	140.0	140.0	84.7	450.0/101160
M450F9-S-250	250.0	60.0	44.0	30.0	162.5	190.0	82.0	12.0	38.0	55.0	65.0	140.0	140.0	80.0	450.0/101160
M450F13-S-250	250.0	60.0	40.0	30.0	-	180.0	82.0	12.0	38.0	55.0	65.0	140.0	140.0	84.0	450.0/101160

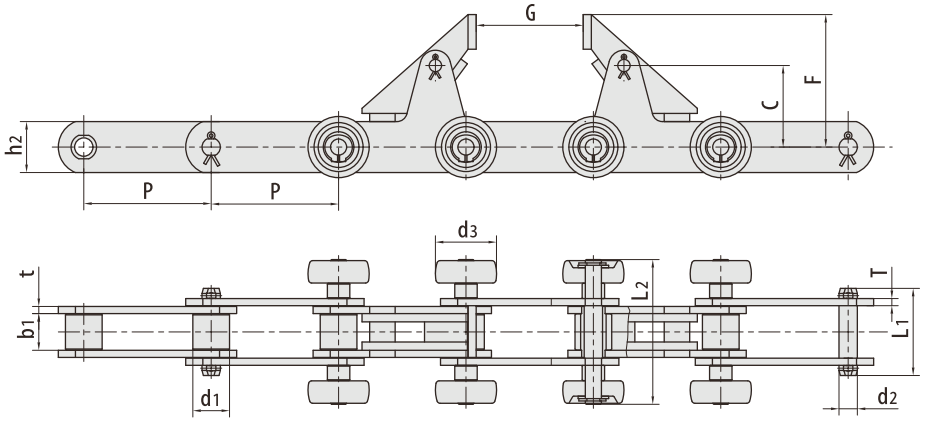

RBL chain number	Pitch	Roller diameter	Width between inner plates	Pin diameter	Pin length		inner plate depth	Plate thickness	Attachment dimension				Tensile strength
	P mm	d1 max mm	b1 min mm	d2 max mm	L1 max mm	L2 max mm	h2 mm	t/T mm	C mm	F mm	G mm	d3 mm	Q min mm
M 160F49-S-125	125.00	36.00	36.00	18.00	85.50	142.00	50.0	7.00	80.0	130.0	105.0	60.0	160.0/35988

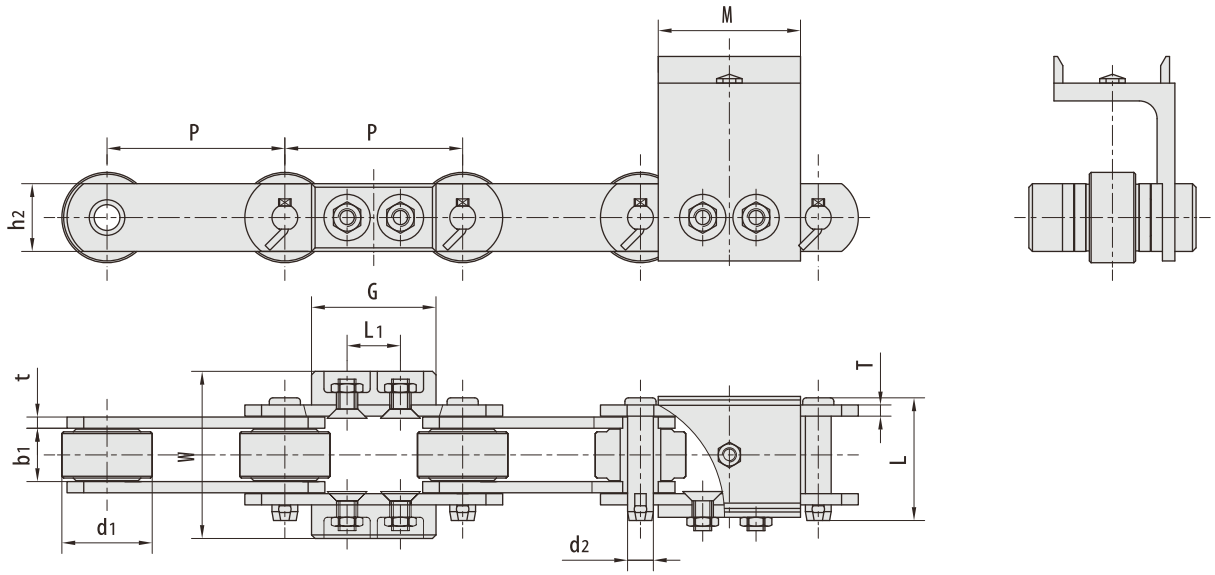

RBL chain number	Pitch	Roller diameter	Width between inner plates	Pin diameter	Pin length	inner plate depth	Plate thickness	Attachment dimension				Tensile strength	Weight
	P mm	d1 max mm	b1 min mm	d2 max mm	L max mm	h2 mm	t/T mm	L1 mm	G mm	W mm	M mm	Q min mm	q kg/m
P100F322	100.0	50.8	30.0	14.5	69.0	38.1	6.3	30.0	70.0	94.0	80.0	100.0/22480	10.3

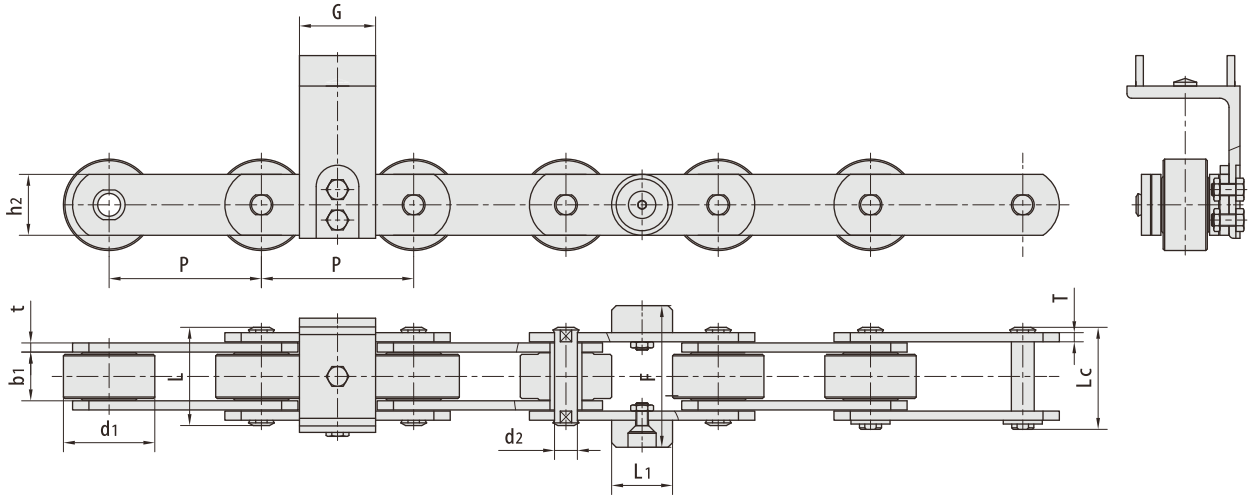

RBL chain number	Pitch	Roller diameter	Width between inner plates	Pin diameter	Pin length		inner plate depth	Plate thickness	Attachment dimension			Tensile strength	Weight
	P mm	d1 max mm	b1 min mm	d2 max mm	L1 max mm	L2 max mm	h2 mm	t/T mm	L1 mm	G mm	F mm	Q min mm	q kg/m
P100F325	100.0	60.0	32.0	15.0	64.5	68.5	40.0	6.0	40.0	50.0	93.5	112.0/25177	16.6

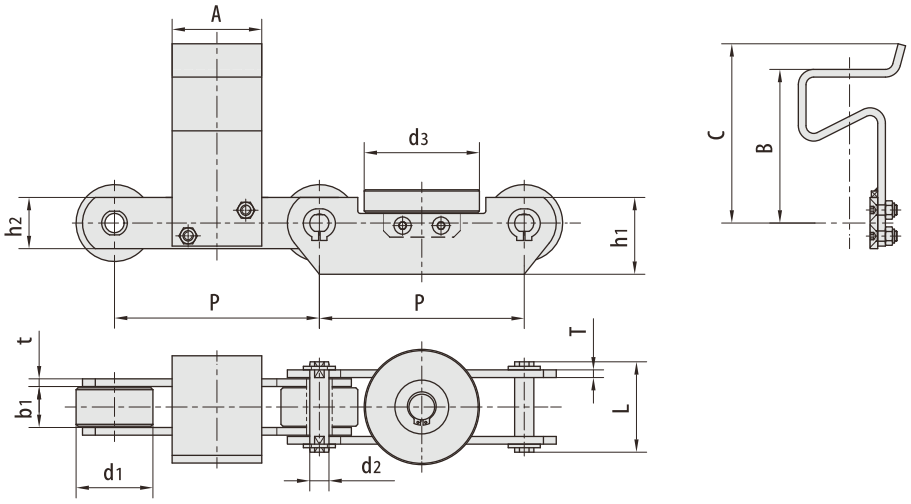

RBL chain number	Pitch	Roller diameter	Width between inner plates	Pin diameter	Pin length	inner plate depth		Plate thickness	Attachment dimension				Tensile strength
	P mm	d1 max mm	b1 min mm	d2 max mm	L max mm	h1 mm	h2 mm	t/T mm	A mm	B mm	C mm	d3 mm	Q min mm
M 112F45-P-160	160.0	60.0	32.0	15.0	71.0	60.0	40.0	6.0	70.0	120.0	140.0	90.0	140.0/31472

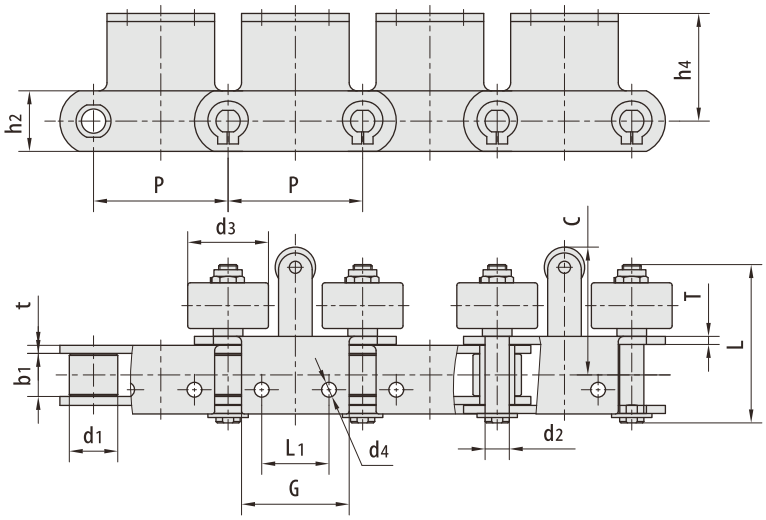

RBL chain number	Pitch	Roller diameter	Width between inner plates	Pin diameter	Pin length	inner plate depth	Plate thickness	Attachment dimension						Tensile strength
	P mm	d1 max mm	b1 min mm	d2 max mm	L max mm	h2 mm	t/T mm	C mm	L1 mm	G mm	h4 mm	d3 mm	d4 mm	Q min mm
M112F58A2-SR1S-100	100.0	36.0	32.0	18.0	119.0	45.0	6.0	95.0	50.0	80.0	80.0	60.0	11.0	112.0/25178
P100F321-SR1	100.0	36.0	32.0	18.0	111.5	45.0	6.0	95.0	50.0	80.0	80.0	60.0	12.0	112.0/25178
P200F131A2SR	100.0	45.0	36.0	25.0	133.2	62.0	8.0	107.5	90.0	140.0	120.0	70.0	11.0	224.0/50355
P250F115A2	250.0	43.0	36.0	21.0	135.3	60.0	8.0	101.0	140.0	190.0	80.0	65.0	12.0	224.0/50355

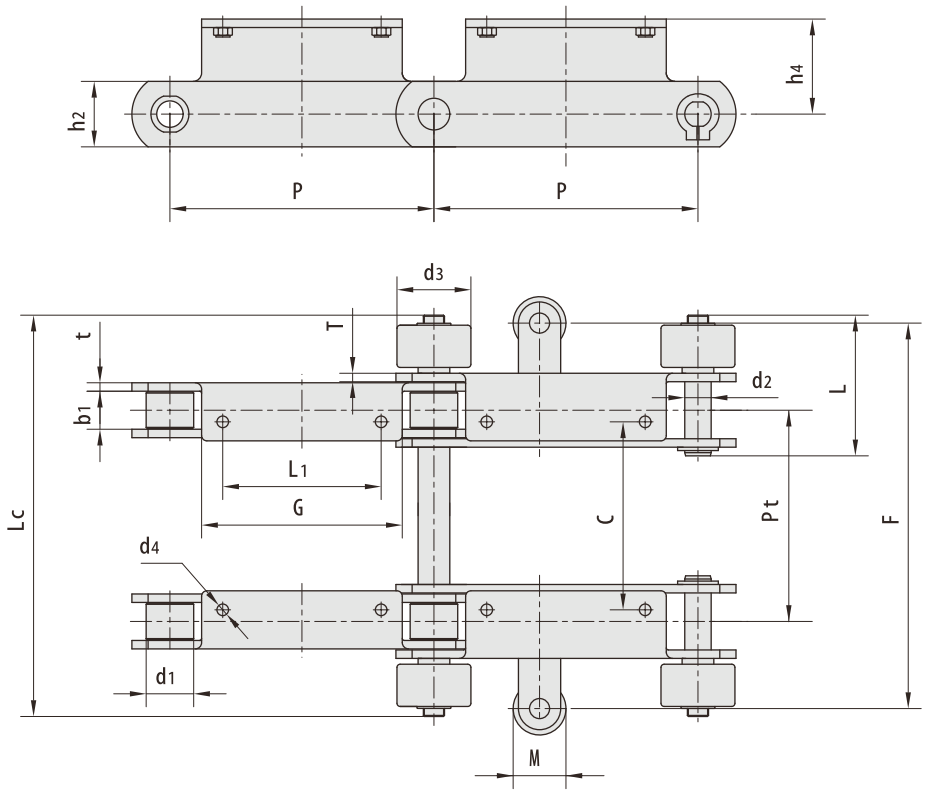

RBL chain number	Pitch	Roller diameter		Width between inner plates	Pin diameter	Pin length		inner plate depth	Plate thickness	Tensile strength	Weight
	P mm	d1 max mm	d3 max mm	b1 min mm	d2 max mm	L1 max mm	L2 max mm	h2 mm	t/T mm	Q min mm	q kg/m
P250F137A2-SR	250.0	50.0	80.0	47.0	25.0	152.2	716.8	72.0	10.0	224.0/50355	59.2
P250F140A2SR	250.0	45.0	70.0	36.0	25.0	133.2	380.0	62.0	8.0	224.0/50355	43.4
P250F159A2SR	250.0	50.0	80.0	47.0	25.0	152.2	1016.8	72.0	10.0	224.0/50355	60.0

RBL chain number	P mm	L1 mm	G mm	C mm	F mm	Pt mm	h4 mm	M mm	d4 mm
P250F137A2-SR	250.0	140.0	180.0	518.0	658.0	518.0	90.0	50.0	11.0
P250F140A2SR	250.0	150.0	190.0	178.0	365.0	200.0	90.0	50.0	12.0
P250F159A2SR	250.0	140.0	180.0	818.0	958.0	818.0	90.0	50.0	11.0

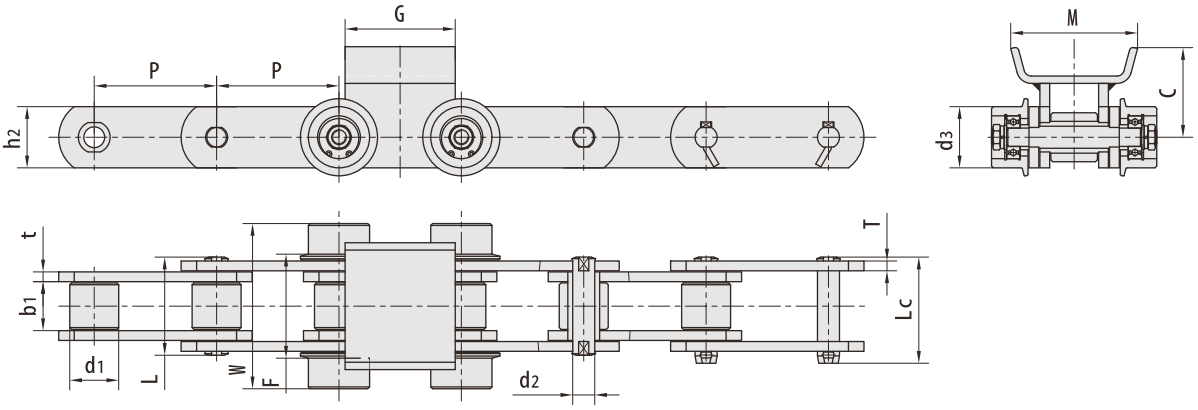

RBL chain number	Pitch	Roller diameter		Width between inner plates	Pin diameter	Pin length		inner plate depth	Plate thickness	Tensile strength	Weight
	P mm	d1 max mm	d3 max mm	b1 min mm	d2 max mm	L1 max mm	L2 max mm	h2 mm	t/T mm	Q min mm	q kg/m
P100F297	100.0	40.0	50.0	40.0	18.0	80.5	87.5	50.0	8.0	200.0/44960	15.5

RBL chain number	C mm	F mm	W mm	G mm	M mm
P100F297	77.0	85.0	135.0	90.0	105.0

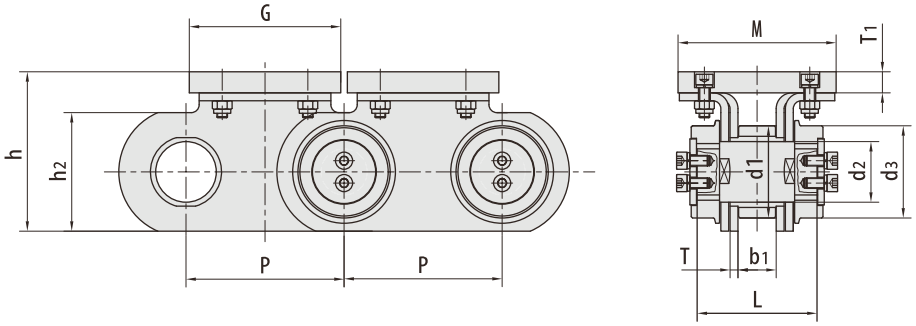

RBL chain number	Pitch	Roller diameter	Width between inner plates	Pin diameter	Pin length	inner plate depth	Plate thickness	Attachment dimension					Tensile strength	Weight
	P mm	d1 max mm	b1 min mm	d2 max mm	L max mm	h2 mm	t/T mm	G mm	M mm	h mm	T1 mm	d3 mm	Q min mm	q kg/m
P100F217	100.0	70.0	29.0	46.0	114.0	90.0	6.0	95.0	120.0	115.0	16.0	70.0	400.0/89920	39.6
P120F18-TP	120.0	70.0	29.0	46.0	91.0	90.0	6.0	115.0	120.0	121.0	16.0	70.0	300.0/67440	50.2
P120F19—TP	120.0	70.0	29.0	46.0	91.0	90.0	6.0	115.0	120.0	121.0	5.0	70.0	300.0/67440	41.8

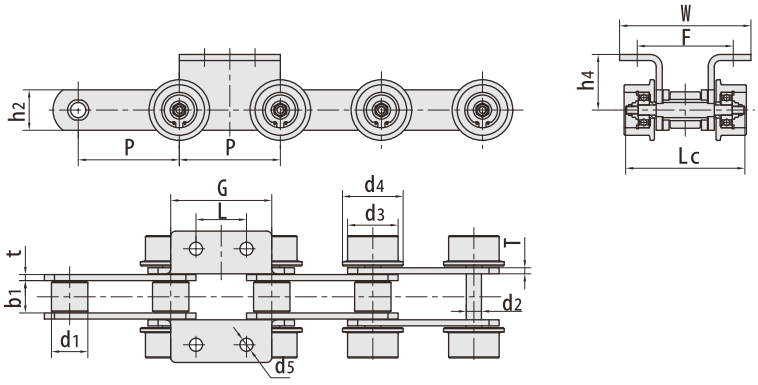

RBL chain number	Pitch	Roller diameter			Width between inner plates	Pin diameter	Pin length	inner plate depth	Plate thickness	Tensile strength	Weight
	P mm	d1 max mm	d3 max mm	d4 max mm	b1 min mm	d2 max mm	Lc max mm	h2 mm	t/T mm	Q min mm	q kg/m
P100F300K2-SR2	100.0	36.0	50.0	60.0	32.0	15.0	118.0	40.0	6.0	100.0722480	14.8

RBL chain number	L mm	G mm	F mm	W mm	h4 mm	d5 mm
P100F300K2-SR2	50.0	100.0	95.0	130.0	55.0	13.0

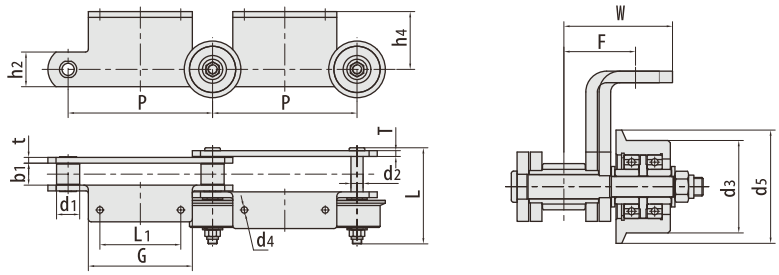

RBL chain number	Pitch	Roller diameter			Width between inner plates	Pin diameter	Pin length	inner plate depth	Plate thickness	Tensile strength	Weight
	P mm	d1 max mm	d3 max mm	d4 max mm	b1 min mm	d2 max mm	L max mm	h2 mm	t/T mm	Q min mm	q kg/m
P250F100A2	250.0	40.0	80.0	98.0	38.0	21.0	166.0	60.0	10.0	224.0/50355	27.4
P250F171A2	250.0	45.0	80.0	98.0	38.0	25.0	166.0	80.0	10.0	315.0/70812	30.5
P250F197A2	250.0	50.0	80.0	98.0	38.0	30.0	173.5	90.0	12.0	450.0/101160	37.5

RBL chain number	L1 mm	G mm	F mm	W mm	h4 mm	d4 mm
P250F100A2	140.0	180.0	62.0	89.2	100.0	11.0
P250F171A2	140.0	180.0	62.0	82.5	100.0	11.0
P250F197A2	140.0	180.0	66.0	97.5	100.0	11.5

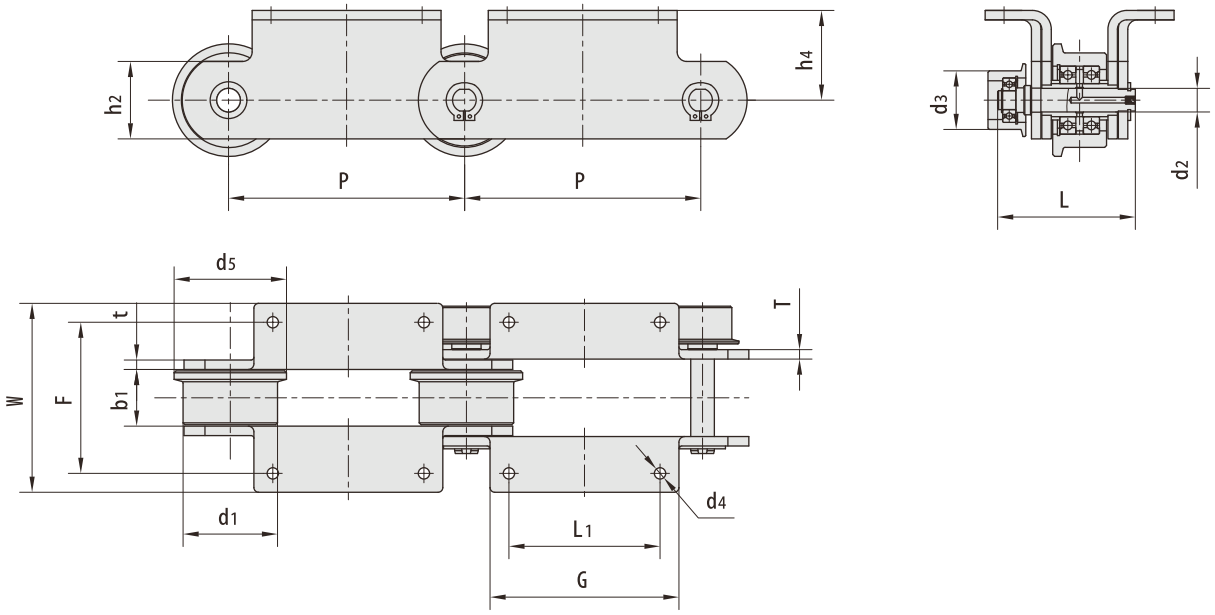

RBL chain number	Pitch	Roller diameter			Width between inner plates	Pin diameter	Pin length	inner plate depth	Plate thickness	Tensile strength	Weight
	P mm	d1 max mm	d3 max mm	d5 max mm	b1 min mm	d2 max mm	L max mm	h2 mm	t/T mm	Q min mm	q kg/m
P250F103K2	250.0	100.0	65.0	120.0	73.0	25.0	180.8	70.0	10.0	315.0/70812	47.6
P250F114K2	250.0	40.0	72.0	-	25.0	25.0	127.0	50.0	8.0	160.0/35968	18.7
P250F120K2	250.0	100.0	65.0	120.0	73.0	25.0	168.0	70.0	8.0	315.0/70812	43.3
P250F122K2	250.0	100.0	65.0	120.0	75.0	25.0	188.0	70.0	11.5	315.0/70812	58.8
P250F172K2	250.0	100.0	62.0	120.0	60.0	25.0	155.0	82.0	10.0	450.0/101160	42.5
P250F206K2	250.0	100.0	62.0	119.0	60.0	25.0	145.8	82.0	10.0	520.0/116896	43.0

RBL chain number	P mm	L1 mm	G mm	F mm	W mm	h4 mm	d4 mm
P250F103K2	250.0	110.0	170.0	180.0	230.0	105.00	11.00
P250F114K2	250.0	125.0	180.0	90.0	122.0	54.00	11.00
P250F120K2	250.0	110.0	150.0	170.0	210.0	105.00	11.00
P250F122K2	250.0	110.0	170.0	180.0	220.0	105.00	12.00
P250F172K2	250.0	160.0	200.0	160.0	200.0	95.00	12.00
P250F206K2	250.0	160.0	200.0	160.0	200.0	95.00	12.00

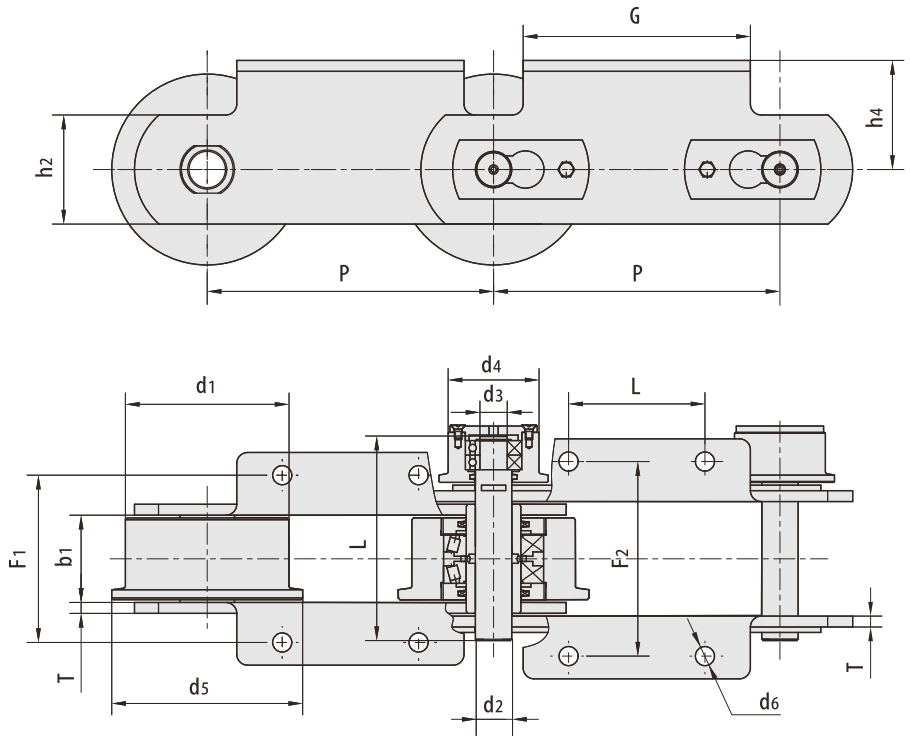

RBL chain number	Pitch	Roller diameter			Width between inner plates	Pin diameter		Pin length	Tensile strength	Weight
	P mm	d1 max mm	d3 max mm	d5 max mm	b1 min mm	d2 max mm	d3 max mm	L1 max mm	Q min mm	q kg/m
P315	315	180.0	100.0	210.0	90.0	40.0	30.0	217.0	100.0/22727	110.0

RBL chain number	P mm	L mm	G mm	F1 mm	F2 mm	h4 mm	h2 mm	d6 mm	T mm
P315	315	150.0	250.0	180.0	206.0	120.0	120.0	21.0	12.0

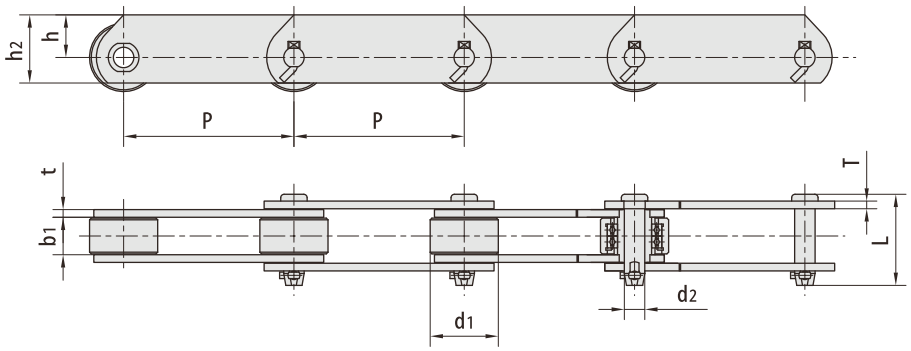

RBL chain number	Pitch	Roller diameter	Width between inner plates	Pin diameter	Pin length	plate depth		Plate thickness	Tensile strength	Average Tensile strength	Weight
	P mm	d1 max mm	b1 min mm	d2 max mm	L max mm	h max mm	h2 max mm	t/T mm	Q min kN/LBF	Qo kN	q kg/m
FVT63F3-PZ-100	100.0	40.0	22.0	12.0	53.5	25.0	40.0	4.5	63.0/14162	68.6	5.1

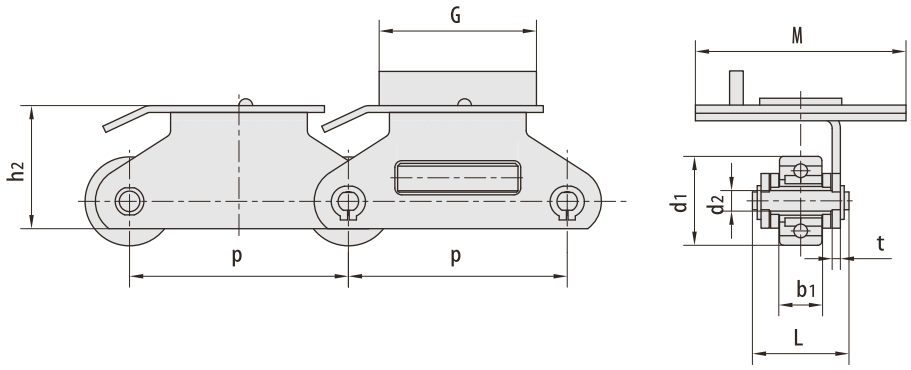

RBL chain number	Pitch	Roller diameter	Width between inner plates	Pin diameter	Pin length	Plate thickness	Attachment dimension			Tensile strength
	P mm	d1 max mm	b1 min mm	d2 max mm	L max mm	t/T mm	G mm	M mm	h2 mm	Q min kN/LBF
M 112F44-P-160	160.0	65.0	32.0	15.00	71.0	6.0	115.0	154.0	70.0	140.0/31472

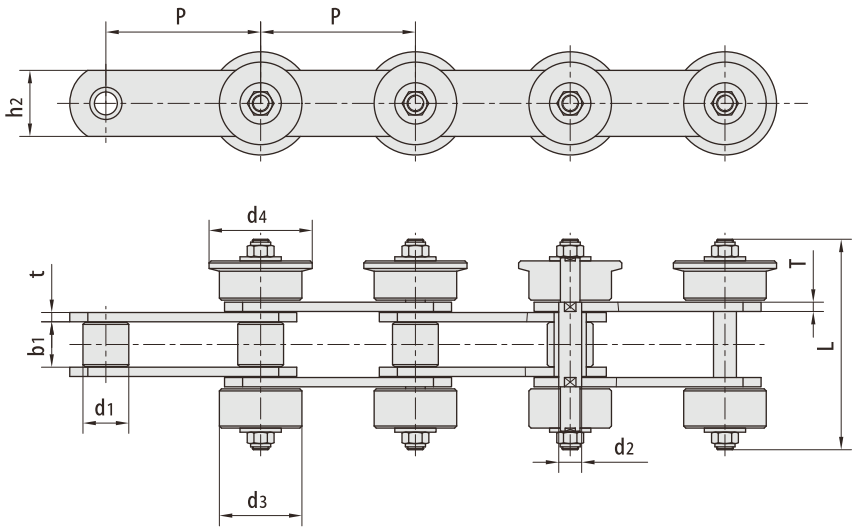

RBL chain number	Pitch	Roller diameter			Width between inner plates	Pin diameter	Pin length	inner plate depth	Plate thickness	Tensile strength	Weight
	P mm	d1 max mm	d3 max mm	d4 max mm	b1 min mm	d2 max mm	L max mm	h2 mm	t/T mm	Q min kN/LBF	q kg/m
P75F55SR2	75.0	22.2	40.0	49.0	22.0	11.1	102.0	32.0	4.5	58.3/13105	9.3

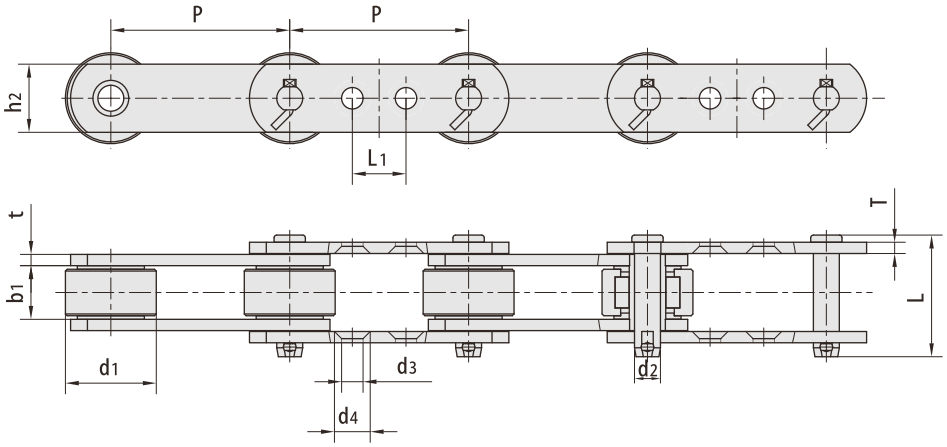

RBL chain number	Pitch	Roller diameter	Width between inner plates	Pin diameter	Pin length	inner plate depth	Plate thickness	Attachment dimension			Tensile strength	Weight
	P mm	d1 max mm	b1 min mm	d2 max mm	L max mm	h2 mm	t/T mm	G mm	M mm	h2 mm	Q min kN/LBF	q kg/m
P100F262-G2	100.0	50.8	30.0	14.5	69.0	38.1	6.3	30.0	12.0	20.0	96.0/21580	8.75

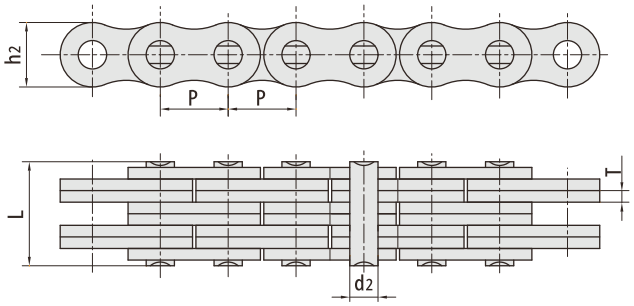

Plate lacing

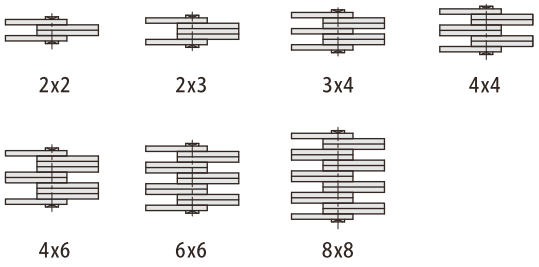

ISO chain number	ANSI RBL chain number	Pitch P mm	Plate lacing	plate depth h2 mm	Plate thickness T max mm	Pin diameter d2 max mm	Pin length L max mm	Tensile strength Q min kN/LBF	Average Tensile strength Qo kN	Weight q kg/m
LH0822	BL422		2x 2				11.05	22.2/5045	27.6	0.60
LH0823	BL423		2x 3				13.16	22.2/5045	27.6	0.75
LH0834	BL434		3x4				17.40	33.4/7591	41.4	1.05
LH0844	BL444	12.700	4x 4	12.07	2.03	5.09	19.51	44.5/10114	56.0	1.20
LH0846	BL446		4x 6				23.75	44.5/10114	56.0	1.46
LH0866	BL466		6x 6				27.99	66.7/15159	81.7	1.77
LH0888	BL488		8x 8				36.45	89.0/20227	109.4	2.32
LH1022	BL522		2x 2				12.90	33.4/7591	43.1	0.90
LH1023	BL523		2x 3				15.37	33.4/7591	43.1	1.10
LH1034	BL534		3x 4				20.32	48.9/11114	65.6	1.50
LH1044	BL 544	15.875	4x 4	15.09	2.42	5.96	22.78	66.7/15159	84.5	1.80
LH1046	BL546		4x6				27.74	66.7/15159	84.5	2.20
LH1066	BL566		6x 6				32.69	100.1/22750	125.1	2.65
LH1088	BL588		8x 8				42.57	133.4/30318	169.5	3.50
LH1222	BL622		2x 2				17.37	48.9/11114	68.2	1.50
LH1223	BL623		2x 3				20.73	48.9/11114	68.2	1.80
LH1234	BL634		3x 4				27.43	75.6/17181	102.8	2.50
LH1244	BL644	19.050	4x 4	18.11	3.25	7.94	30.78	97.9/22250	136.9	2.90
LH1246	BL646		4x 6				37.49	97.9/22250	136.9	3.60
LH1266	BL666		6x 6				44.20	146.8/33364	214.2	4.30
LH1288	BL688		8x 8				57.61	195.7/44477	217.7	5.80
LH1622	BL822		2x 2				21.34	84.5/19204	108.2	2.40
LH1623	BL823		2x 3				25.48	84.5/19204	108.2	3.00
LH1634	BL834		3x 4				33.76	129.0/29318	170.0	4.20
LH1644	BL844	25.400	4x 4	24.13	4.00	9.54	37.90	169.0/38409	214.6	4.80
LH1646	BL846		4x 6				46.18	169.0/38409	214.6	6.00
LH1666	BL866		6x 6				54.46	253.6/57636	324.5	7.20
LH1688	BL888		8x 8				71.02	338.1/76841	432.7	9.60

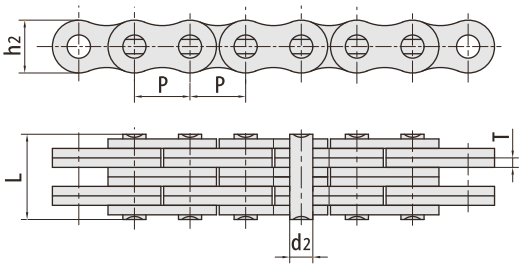

Plate lacing

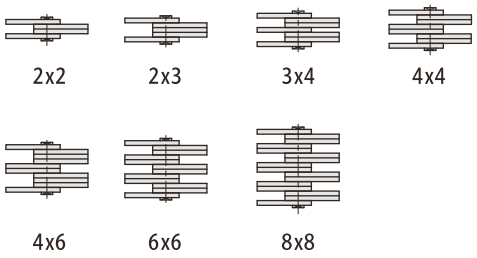

ISO chain number	ANSI RBL chain number	Pitch P mm	Plate lacing	plate depth h2 mm	Plate thickness T max mm	Pin diameter d2 max mm	Pin length L max mm	Tensile strength Q min kN/LBF	Average Tensile strength Qo kN	Weight q kg/m
LH2022	BL1022	31.75	2x2	30.18	4.80	11.11	25.37	115.6/26272	165.8	3.57
LH2023	BL1023		2x3				30.33	115.6/26272	165.8	4.45
LH2034	BL1034		3x4				40.23	182.4/41454	248.7	6.19
LH2044	BL1044		4x4				45.19	231.3/52568	303.6	7.04
LH2046	BL1046		4x6				55.09	231.3/52568	303.6	8.77
LH2066	BL1066		6x6				65.00	347.0/78863	433.7	10.50
LH2088	BL1088		8x8				84.81	462.6/105136	604.1	14.00
LH2422	BL1222	38.10	2x2	36.20	5.60	12.71	29.62	151.2/34363	192.0	4.96
LH2423	BL1223		2x3				35.43	151.2/34363	192.0	6.16
LH2434	BL1234		3x4				47.07	244.6/55591	315.9	8.55
LH2444	BL1244		4x4				52.88	302.5/68750	381.1	9.76
LH2446	BL1246		4x6				64.52	302.5/68750	381.1	12.16
LH2466	BL1266		6x6				76.15	453.7/103113	543.6	14.61
LH2488	BL1288		8x8				99.42	605.0/137500	726.0	19.36
LH2822	BL1422	44.45	2x2	42.24	6.40	14.29	33.55	191.3/43477	225.7	6.89
LH2823	BL1423		2x3				40.16	191.3/43477	225.7	8.55
LH2834	BL1434		3x4				53.37	315.8/71772	448.3	11.61
LH2844	BL1444		4x4				59.97	382.6/86954	451.2	13.24
LH2846	BL1446		4x6				73.18	382.6/86954	451.2	16.51
LH2866	BL1466		6x6				86.39	578.3/131431	682.4	19.79
LH2888	BL1488		8x8				112.80	765.1/173886	902.8	26.35
LH3222	BL1622	50.80	2x2	48.26	*7.20	17.46	39.01	289.1/65704	341.1	8.78
LH3223	BL1623		2x3				46.58	289.1/65704	341.1	10.90
LH3234	BL1634		3x4				61.72	440.4/100091	519.6	15.15
LH3244	BL1644		4x4				69.29	573.8/131431	680.4	17.27
LH3246	BL1646		4x6				84.43	578.3/131431	680.4	21.53
LH3266	BL1666		6x6				99.57	857.4/194863	1000.7	25.88
LH3288	BL1688		8x8				129.84	1156.5/262841	1364.6	34.29
LH4022	BL2022	63.50	2x2	60.33	9.91	23.81	51.74	433.7/98568	511.7	15.95
LH4023	BL2023		2x3				61.70	433.7/98568	511.7	19.78
LH4034	BL2034		3x4				81.61	649.4/147590	766.2	27.46
LH4044	BL2044		4x4				91.57	867.4/197163	1023.5	31.34
LH4046	BL2046		4x6				111.48	867.4/197163	1023.5	39.01
LH4066	BL2066		6x6				131.39	1301.1/295704	1535.2	46.63
LH4088	BL2088		8x8				171.22	1734.8/394272	2046.5	62.00

*: We have two kinds of chain plate thickness. Besides the 7.20 mm in above table, the other thickness is 7.52 mm Customers can choose according to needs.

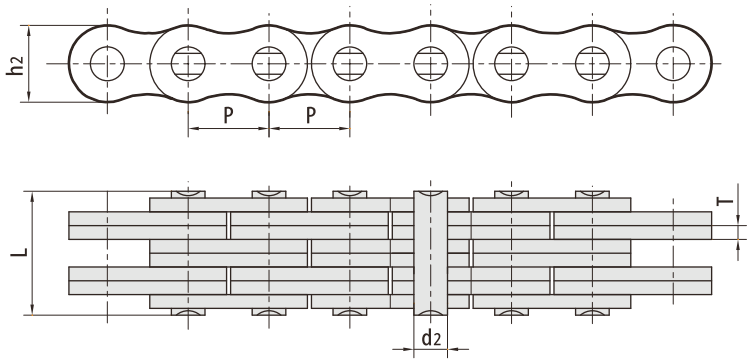

Plate lacing

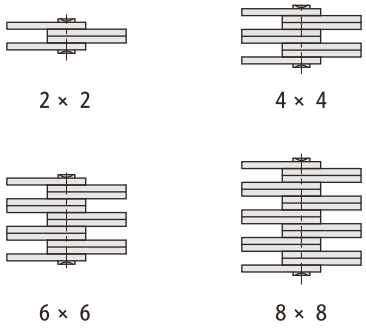

ISO chain number	Pitch P mm	Plate lacing	plate depth h2 mm	Plate thickness T max mm	Pin diameter d2 max mm	Pin length L max mm	Tensile strength Q min kN/LBF	Average Tensile strength Qo kN	Weight q kg/m
LL0622	9.525	2x2	8.2	1.04	3.28	6.2	9.0/2023	9.9	0.22
LL0644		4x4				10.7	18.0/4046	19.8	0.42
LL0666		6*6				14.9	24.9/5598	27.4	0.62
LL0822	12.700	2x2	10.6	1.60	4.45	8.9	18.2/4094	20.4	0.42
LL0844		4x4				15.6	36.4/8188	40.7	0.84
LL0866		6x6				22.0	54.6/12283	60.0	1.24
LL0888		8x8				28.5	72.8/16378	80.0	1.64
LL1022	15.875	2x2	13.7	1.60	5.08	9.2	22.7/5107	25.5	0.54
LL1044		4x4				15.8	45.4/10213	51.0	1.06
LL1066		6x6				22.1	68.1/15321	76.3	1.57
LL1088		8x8				28.8	90.8/20427	101.9	2.10
LL1222	19.050	2x2	16.0	1.85	5.72	10.4	29.5/6637	33.2	0.73
LL1244		4x4				17.9	59.0/13273	66.4	1.44
LL1266		6x6				25.4	88.5/19910	99.7	2.15
LL1288		8x8				32.9	118.0/26547	132.9	2.84

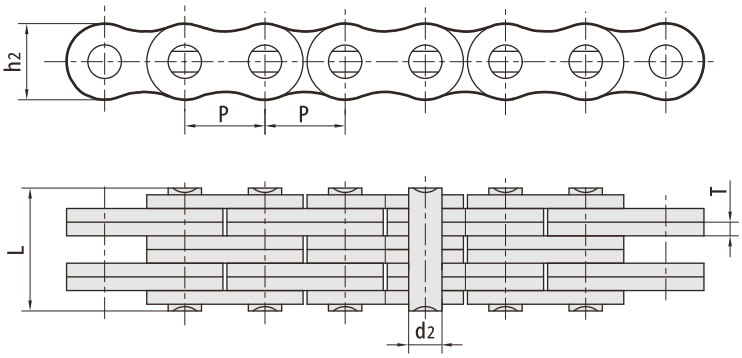

Plate lacing

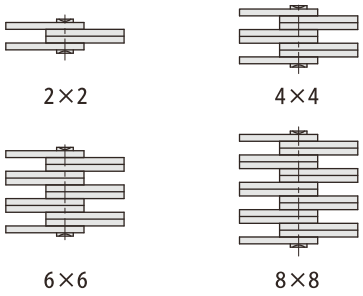

ISO chain number	Pitch P mm	Plate lacing	plate depth h2 mm	Plate thickness T max mm	Pin diameter d2 max mm	Pin length L max mm	Tensile strength Q min kN/LBF	Average Tensile strength Qo kN	Weight q kg/m
LL1622	25.40	2X2	21.00	3.10	8.28	17.2	58.0/13182	76.3	1.52
LL1644		4X4				29.6	116.0/26363	152.6	2.90
LL1666		6X6				42.4	174.0/39545	228.9	4.30
LL1688		8X8				54.9	232.0/52726	305.2	5.71
LL2022	31.75	2X2	26.40	3.70	10.19	20.1	95.0/21591	109.2	2.33
LL2044		4X4				33.8	190.0/43182	218.5	4.40
LL2066		6X6				50.1	285.0/64773	324.6	6.79
LL2088		8X8				64.0	380.0/66363	435.1	8.90
LL2422	38.10	2X2	33.40	5.00	14.63	28.4	170.0/38363	195.5	4.47
LL2444		4X4				46.3	340.0/77273	380.8	8.22
LL2466		6X6				66.4	510.0/115909	571.2	12.22
LL2488		8X8				86.6	680.0/154545	775.2	16.30
LL2822	44.45	2X2	37.08	6.00	15.90	32.2	200.0/45455	245.0	5.40
LL2844		4X4				56.4	400.0/90909	490.0	10.53
LL2866		6X6				80.8	600.0/136363	735.0	15.68
LL2888		8X8				105.2	800.0/181818	980.0	20.83
LL3222	50.80	2X2	42.00	6.40	17.81	34.8	260.0/59091	291.2	6.39
LL3244		4X4				60.6	520.0/118182	582.4	12.46
LL3266		6X6				86.4	780.0/177272	873.6	18.52
LL3288		8X8				112.2	1040.0/233970	1176.0	24.65
LL4022	63.50	2X2	52.76	8.00	22.89	42.2	360.0/61818	403.2	10.36
LL4044		4X4				74.4	780.0/177273	873.6	20.22
LL4066		6X6				106.5	1080.0/245454	1209.6	30.07
LL4088		8X8				140.0	1440.0/323959	1747.2	39.98
LL4822	76.20	2X2	63.88	10.00	29.24	54.6	560.0/127272	627.2	15.94
LL4844		4X4				92.6	1120.0/254545	1554.4	31.38
LL4866		6X6				133.4	1680.0/377953	1880.0	46.94
LL4888		8X8				174.2	2240.0/509091	2508.8	62.36

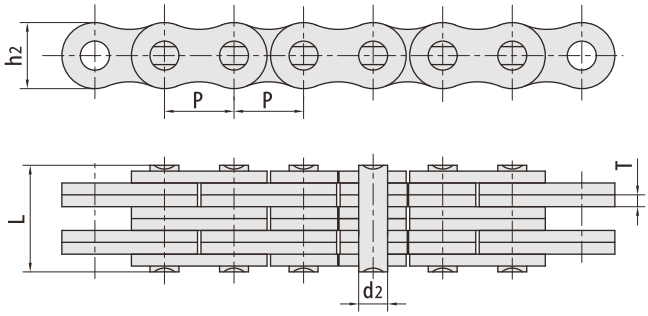

Plate lacing

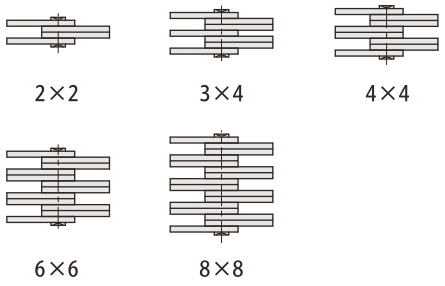

RBL chain number	Pitch P mm	Plate lacing	plate depth h2 mm	Plate thickness T max mm	Pin diameter d2 max mm	Pin length L max mm	Tensile strength Q min kN/LBF	Average Tensile strength Qo kN	Weight q kg/m
AL322	9.525	2X2	7.7	1.30	3.58	6.80	9.0/2045	10.2	0.23
AL344		4X4				11.60	18.0/4090	20.0	0.46
AL422	12.700	2X2	10.4	1.50	3.96	8.30	14.7/3304	16.9	0.39
AL444		4X4				14.40	29.4/6609	35.2	0.74
AL466		6X6				20.50	44.0/9891	52.7	1.13
AL522	15.875	2X2	12.8	2.03	5.08	11.05	24.5/5508	28.6	0.64
AL534		3X4				17.00	36.8/8273	46.0	1.10
AL544		4X4				19.40	48.9/10993	62.4	1.25
AL566		6X6				27.50	73.4/16500	93.8	1.79
AL622	19.050	2X2	15.6	2.42	5.94	13.00	33.4/7508	44.4	0.87
AL644		4X4				22.70	66.7/14994	78.8	1.70
AL666		6X6				32.20	100.1/22502	118.6	2.53
AL688		8X8				42.20	133.4/29988	156.6	3.37
AL822	25.400	2X2	20.8	3.25	7.92	16.20	57.9/13016	68.6	1.57
AL844		4X4				29.40	115.7/26009	135.6	3.08
AL866		6X6				44.20	173.5/39003	202.3	4.62
AL888		8X8				55.50	231.4/52019	245.0	6.12
AL1022	31.750	2X2	25.6	4.00	9.53	19.60	84.5/18996	107.1	2.51
AL1044		4X4				36.40	169.0/37991	203.6	4.95
AL1066		6X6				52.30	253.5/56987	315.3	7.39
AL1088		8X8				68.50	338.0/75982	421.2	9.83
AL1222	38.100	2X2	30.5	4.80	11.10	24.30	120.1/26998	151.1	3.65
AL1244		4X4				43.80	240.2/53997	299.7	7.05
AL1266		6X6				63.20	360.3/80995	426.3	10.50
AL1288		8X8				82.60	480.4/107994	568.4	14.03
AL1444	44.450	4X4 6X6	36.4	5.60	12.70	51.30	302.5/68002	413.6	9.80
AL1466						74.50	453.7/101992	620.4	14.66
AL1644	50.800	4X4	41.6	6.40	14.21	58.00	382.5/85986	522.8	12.90
AL1666		6X6				83.80	573.8/128990	783.6	19.27
AL1688		8X8				109.50	765.0/171972	1045.5	25.64

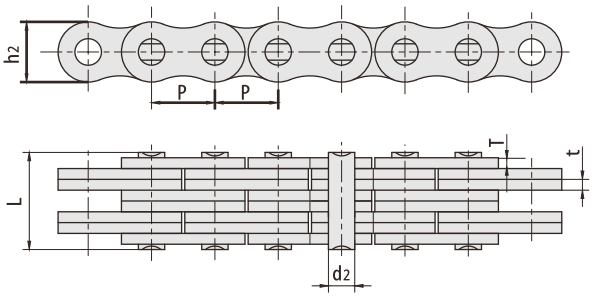

Plate lacing

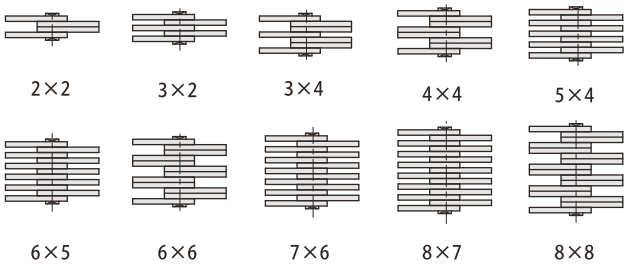

RBL chain number	Pitch P mm	Plate lacing	plate depth h2 mm	Plate thickness T max mm	Pin diameter d2 max mm	Pin length L max mm	Tensile strength Q min kN/LBF	Average Tensile strength Qo kN	Weight q kg/m
FL644		4X4				6.2	6.50/l477	7.8	0.13
FL666	5.940	6X6	4.7	0.60	1.85	9.3	9.75/2216	11.8	0.20
FL688		8X8				12.0	13.00/2955	15.6	0.25
FL523	8.000	3X2	6.3	1.00	2.31	6.7	7.00/1575	7.4	0.18
*FL523F1	8.000	3X2	6.3	1.30/1.00	2.31	6.3	7.00/1575	7.4	0.25
*FL523F3	8.000	3X2	7.6	1.30/1.04	3.10	8.0	7.00/1575	8.0	0.33
*FL523F4	8.000	3X2	7.6	1.30/1.04	2.31	7.6	7.00/1576	8.0	0.32
FL844	8.000	4X4	6.9	0.73	2.31	7.9	10.00/2273	12.1	0.25
*FL823F1	8.000	3X2	7.6	1.30/1.04	3.15	7.8	11.00/2472	11.8	0.32
FL922		2X2				6.2	10.00/2273	12.1	0.22
FL944		4X4				10.4	21.00/4724	24.7	0.43
FL945	9.525	4X5	8.7	1.04	3.28	11.5	21.00/4724	23.0	0.50
FL956		6X5				14.0	25.50/5732	28.0	0.60
FL966		6X6				14.9	31.00/7045	36.8	0.65
FL988		8X8				19.0	42.00/9450	46.2	0.87
FL966F3	9.525	6X6	8.7	1.15	3.28	16.2	33.10/7441	36.5	0.75
FL922F4	9.525	2X2	8.5	1.60	3.90	8.6	12.50/2810	13.8	0.37
LF10	10.000	3X3	7.5	1.20	3.20	10.6	14.00/3150	15.5	0.39
LF1234	12.000	4X3	10.0	2.03	3.96	17.6	15.45/3476	17.0	0.85
LF1246	12.000	A6X4	10.8	1.60	5.08	18.7	30.00/6748	33.0	1.05
F1266F1	12.700	A6X6	9.0	1.60	3.70	21.6	45.00/10123	50.0	0.92
F122	12.700	2X2	8.2	1.00	3.58	7.0	11.43/2598	13.6	0.19
F1223	12.700	3X2	10.2	2.03	4.45	12.8	20.00/4545	23.8	0.61
FL1244	12.700	4X4	10.2	1.70	4.45	16.7	44.00/10000	52.3	0.83
Fl 023	15.875	3X2	14.3	2.42	4.75	15.9	25.00/5625	27.5	1.11
FLC534		3X4				15.3	40.40/9181	44.4	0.99
FLC545	15.875	5X4	12.7	1.85	5.08	19.2	54.30/l2340	59.7	1.27
FLC556		6X5				22.7	67.60/l5363	74.3	1.54
FLC567		7X6				26.8	80.80/18176	89.0	1.82

Note: * means straight link plate; △ means special link plate combination

Plate lacing

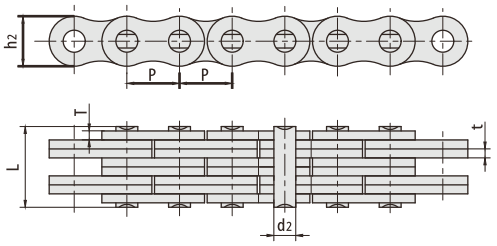

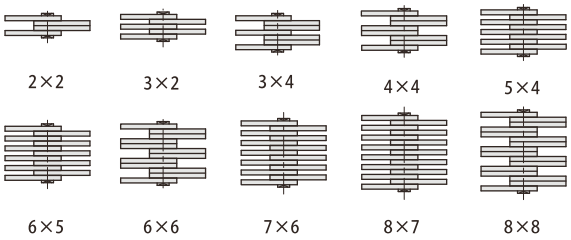

RBL chain number	Pitch P mm	Plate lacing	plate depth h2 mm	Plate thickness t/T max mm	Pin diameter d2 max mm	Pin length L max mm	Tensile strength Q min kN/LBF	Average Tensile strength Qo kN	Weight q kg/m
FLC578	15.875	8X7	12.70	1.85	5.08	30.8	90.040250	99.0	2.10
CTL566	15.875	6X6	15.10	2.10	5.08	28.0	78.0/17534	86.0	2.44
CTBLL588	15.875	8X8	14.80	1.70	5.94	30.7	85.0/19108	105.0	2.59
*CH25	17.000	2X1	9.00	1.60	4.00	7.5	6.0/1348	7.5	0.27
LF1866	18.550	6X6	15.80	3.00	6.00	39.8	106.043845	116.6	3.58
LF1966									3.53
F19S-44	19.050	4X4	14.70	2.25	5.98	21.8	76.5/17210	84.5	1.55
F19S-66		6X6				31.0	115.045870	126.5	2.31
F19V-44	19.050	4X4	15.20	2.42	6.50	22.4	71.0/16136	84.3	1.73
F19V-66		6X6				32.3	106.044090	125.9	2.57
F19VF1-66	19.050	6X6	17.60	2.42	6.50	32.3	164.046867	180.4	3.22
F19V-88	19.050	8X8	15.20	2.42	6.50	42.4	142.041922	156.2	3.41
FLC623	19.050	3X2	14.50	1.85	5.72	12.5	30.04744	33.0	0.81
FLC634	19.050	4X3	14.50	1.85	5.72	16.1	46.0/10341	50.6	1.12
FL2044	20.000	4X4	16.00	2.42	5.30	22.4	67.0/l5062	73.7	1.83
FLC823	25.400	3X2	19.46	3.25	8.28	20.9	65.0/14612	72.0	1.86
FLC834		4X3				27.4	100.042500	110.0	2.57
FLC845		5X4				34.2	130.049224	143.0	3.30
FLC856		6X5				40.5	166.047343	183.0	4.00
FLC867		7X6				47.0	195.744024	215.3	4.70
FLC878		8X7				53.6	227.541180	250.5	5.40
F25-34	25.400	3X4	23.40	3.05/4.00	10.85	28.6	125.048120	137.5	3.64
F25-66		6X6				44.1	250.046240	275.0	5.93
F25-66F1	25.000	6X6	24.00	3.00	10.85	42.0	147.043046	190.0	5.65
FLC1034	31.750	4X3	25.40	3.25	9.53	28.4	82.7/18591	91.0	3.52
FLC1045		5X4				34.3	110.044745	121.0	4.49
FLC1056		6X5				40.6	137.941340	151.0	5.44
FLC1067		7X8				47.2	165.447590	181.9	6.42
FLC1078		8X7				53.8	193.0/43863	212.0	7.40
LF31109	31.750	10X9	27.00	4.00	12.00	83.0	440.048915	500.0	12.70
P35-44	35.000	A4X4	30.00	4.00	12.00	37.7	100.042500	110.0	5.96
LF8844F1	88.900	4X4	84.00	13.50	40.00	122.0	1950.0438360	2145.0	60.60
D90F1	90.000	8X8	70.00	6.30	36.00	113.0	980.0420460	1078.0	41.20
LF105	105.000	11x10	80.00	6.00	40.00	143.0	1470.0430690	1690.5	64.38

Note: * means straight link plate; △ means special link plate combination

Plate lacing

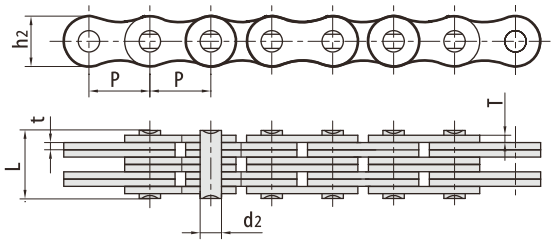

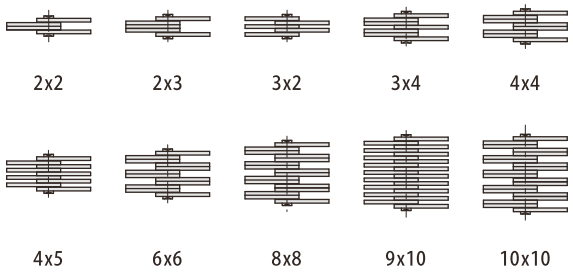

RBL chain number	Pitch P mm	Plate lacing	plate depth h2 mm	Plate thickness t/T max mm	Pin diameter d2 max mm	Pin length L max mm	Tensile strength Q min kN/LBF	Average Tensile strength Qo kN	Weight q kg/m
AL0522	8.000	2X2	7.10	0.80	2.31	5.00	4.4/990	4.6	0.15
AL0544		4X4				8.20	8.8/1980	9.3	0.28
AL0566		6X6				11.60	13.0/2922	13.7	0.42
AL322F1	9.525	2X2	7.00	1.30	3.58	7.50	9.3/2092	9.8	0.22
AL344F1		4X4				12.80	18.5/4162	19.4	0.42
AL366F1		6X6				18.20	27.8/6254	29.2	0.62
AL388F1		8X8				23.60	37.0/8323	38.8	0.82
AL322HF2	9.525	2X2	7.70	1.50	3.58	7.60	10.0/2248	10.5	0.24
*AL344F3	9.525	4X4	7.70	1.20	3.58	11.60	18.0/4046	18.9	0.49
AL344F4	9.525	4X4	7.90	1.57	3.58	15.00	25.0/5620	26.3	0.63
AL866F1	25.400	6X6	20.50	3.00	7.92	40.30	135.0/30370	148.5	4.40
AL822F3	25.400	2X2	20.80	3.25	7.92	15.90	57.9/13016	70.0	1.61
AL10910F1	31.750	10X9	27.00	4.00	12.00	83.00	400.0/69923	441.0	11.80
AL1066F2	31.750	6X6	25.60	4.00	9.53	52.20	265.0/59574	305.0	7.43
AL1044F1	31.750	4X4	22.80	4.15	10.19	37.90	214.0/48107	234.5	4.32
AL1266F1	38.100	6X6	30.00	4.80	13.30	64.30	420.0/94482	462.0	9.68
BL432F1	12.700	A3 x 2	11.60	2.03	4.45	12.60	22.0/4946	24.0	0.76
LH0844F5	12.700	4x4	12.07	1.60	5.08	16.00	27.5/6182	30.0	1.01
LH0832F6	12.700	A3 x 2	12.07	2.03	4.45	13.16	19.8/4451	23.0	0.77
LH081010F8	12.700	10x10	12.07	2.03	5.94	44.80	120.0/26977	130.0	6.35
LH0844F	12.700	4x4	12.07	1.60	5.08	15.70	44.48/10000	48.9	1.01
BL544F1	15.875	4x4	14.60	2.37	5.94	22.50	80.0/17985	85.0	1.76
LH1034F2	15.875	3x4	15.00	2.42	5.94	20.30	65.0/14612	70.0	1.64
BL544F8	15.875	4x4	15.00	1.70	5.80	17.00	46.0/10341	53.0	1.33
LH1223F1	19.050	2x3	15.60	2.42	5.94	20.30	29.4/6610	32.5	1.50
LH1245F1		4x5				25.20	39.2/8812	43.0	1.91
LH1223F3	19.050	2x3	18.10	3.25	7.93	19.90	68.65/15433	71.0	1.95
LH1234F3		3x4				26.60	102.97/23148	108.8	2.69

Note: * means straight link plate; △ means special link plate combination

Plate lacing

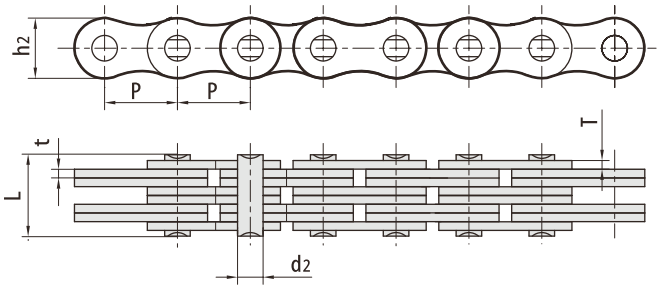

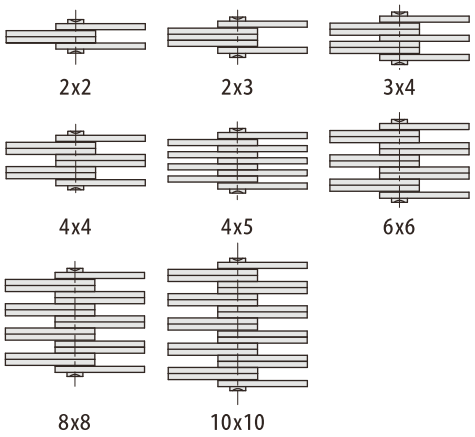

RBL chain number	Pitch P mm	Plate lacing	plate depth h2 mm	Plate thickness t/T max mm	Pin diameter d2 max mm	Pin length L max mm	Tensile strength Q min kN/LBF	Average Tensile strength Qo kN	Weight q kg/m
BL666F1	19.050	6x6	18.10	2.35	6.50	31.70	130.0/29224	143.0	3.30
*BL666GL	19.050	6x6	16.00	3.00	6.25	40.00	100.0/22480	110.0	3.80
BL866F1	25.400	6X6	24.10	3.10/4.00	10.85	45.70	200.0/44992	220.0	6.14
BL834F2		3X4				29.50	120.0/26995	132.0	3.76
BL834F3	25.400	3X4	24.10	4.00	10.90	32.90	142.0/31944	156.2	4.44
BL866F3		6X6				52.20	253.6/57050	279.0	7.48
BL834F5	25.400	3X4	24.10	3.10/4.00	10.90	28.00	120.0/26995	132.0	3.64
BL866F5	25.400	6X6	24.10	3.30/4.00	10.90	45.30	200.0/44992	220.0	4.94
LH1646F3	25.400	4x6	24.10	4.00	9.53	44.20	233.0/52378	256.5	6.22
BL844F8	25.400	4x4	25.10	3.00	10.90	30.00	120.0/26976	135.0	3.84
LH2066F1	31.750	6x6	29.70	4.09	11.10	55.70	303.0/68177	365.0	9.42
BL1046F2	31.750	4x6	29.70	4.00	11.10	47.00	231.3/51996	266.0	7.74
LH2054F4	31.750	A5 x 4	29.70	5.60	11.10	56.50	280.0/62947	340.0	9.56
LH281010F1	44.450	10x10	36.10	5.00	14.27	108.00	1220.0/274256	1400.0	22.20
LH3288F1	50.800	8X8	47.80	6.90	20.20	122.00	1200.0/269950	1320.0	33.53
LH3266F2	50.800	6X6	48.20	7.00	17.46	91.80	867.0/195040	953.7	24.52
LH3244F6	50.800	4x4	42.00	6.00	17.46	56.00	430.0/96667	505.0	11.96
LH3288F9	50.800	8X8	48.20	6.40	17.46	112.00	1040.0/233792	1144.0	31.89
LH3288F10	50.800	8x8	48.20	9.50	19.84	164.20	2100.0/472080	2310.0	51.63
LL0622F4	9.525	2x2	8.40	1.04	3.28	6.20	10.0/2248	10.5	0.23
LL0634F4		3x4				9.70	15.5/3484	16.5	0.39
LL0644F4		4x4				10.70	21.0/4720	22.0	0.44
LL0666F4		6x6				14.90	31.0/6970	33.0	0.65

Note: * means straight link plate; △ means special link plate combination

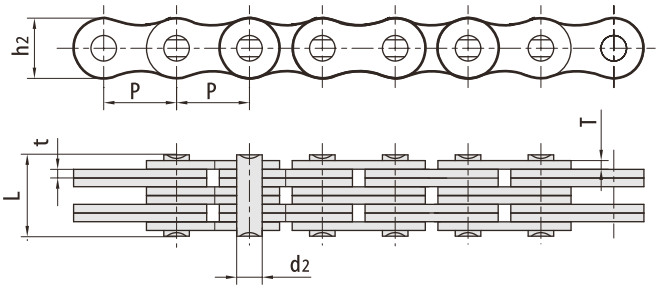

Plate lacing

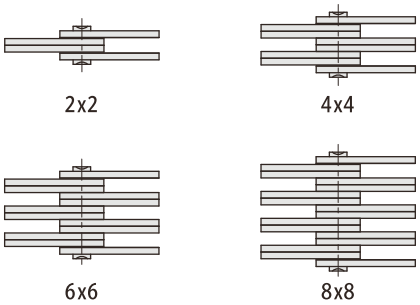

ISO chain number	Pitch P mm	Plate lacing	plate depth h2 max mm	Plate thickness t/T max mm	Pin diameter d2 max mm	Pin length L max mm	Tensile strength Q min kN/LBF	Average Tensile strength Qo kN	Weight q kg/m
LL0622F7	9.525	2x2	8.20	1.30	3.28	7.40	10.5/2360	11.6	0.27
LL0644F7		4x4				12.80	21.0/4720	23.0	0.52
LL0844F6	12.700	4x4	11.00	1.50	4.45	14.60	37.6/43452	81.4	0.82
LL0888F1		8x8				27.40	77.0/17310	85.0	1.61
LL0844F7	12.700	4x4	11.20	1.60	4.45	15.60	36.4/8180	41.5	0.85
LL0822F13	12.700	2x2	10.60	1.70	4.45	9.40	22.0/4940	23.0	0.45
LL0844F13		4x4				16.50	40.0/8990	43.0	0.88
LL0888F2	12.700	8x8	11.00	1.43	4.45	25.90	77.0/17310	84.7	1.55
LL1044F7	15.875	4x4	13.70	1.50	5.08	15.10	48.0/10790	52.8	1.04
LL1066F3	15.875	6x6	13.70	1.80	5.08	24.50	86.0/19333	94.6	1.68
LL101212F4	15.875	△2x12	11.80	1.60	5.08	42.50	110.0/24728	121.0	2.47
LL101212F5	15.875	△2x12	13.70	1.50	5.08	40.50	136.2/30620	150.0	3.00
LL1266F2	19.050	6x6	14.50	3.00	5.72	39.50	156.8/35249	173.0	3.03
LL1266F3	19.050	6x6	16.00	3.00	5.72	39.50	88.5/19895	97.5	3.03
*LL1266H	19.050	6x6	16.13	3.00	5.72	40.00	86.7/19490	100.0	3.75
LL1266F6	19.050	6x6	18.50	2.90	5.72	38.75	88.2/19827	97.0	4.12
LL1622F6	25.400	2X2	20.00	3.00	8.28	15.60	58.0/13047	63.8	1.40
LL2066F6	31.750	6x6	30.20	4.00	13.74	56.10	310.0/69690	356.5	13.13
LL3244F2	50.800	4X4	43.10	6.00	17.76	54.00	520.0/116978	572.0	12.62
LL3244F8	50.800	4x4	42.00	6.00	17.81	57.00	520.0/116900	560.0	12.31
LL3288F8		8x8				105.50	1040.0/233800	1125.0	24.32
LL4088F2	63.500	8x8	52.70	8.20	22.89	140.00	1440.0/323725	1660.0	42.39
LL4888H	76.200	8X8	70.00	12.00	36.50	204.00	2630.0/591638	2893.0	83.80

Note: * means straight link plate; △ means special link plate combination

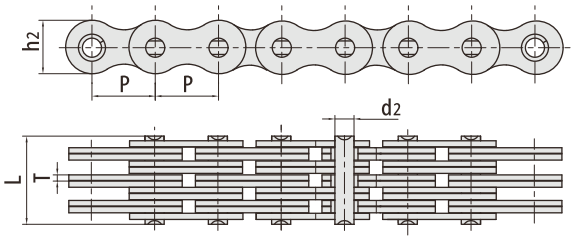

RBL chain number	Pitch P mm	Plate lacing	plate depth h2 max mm	Plate thickness T max mm	Pin diameter d2 max mm	Pin length L max mm	Tensile strength Q min kN/LBF	Average Tensile strength Qo kN	Weight q kg/m
FB156	15.875	6X6	14.7	1.70	5.08	24.0	78.0/I7550	86.0	1.91
FB156S				2.03		27.5	83.5/I8784	92.0	2.24
FB196	19.050	6X6	16.0	1.85	5.72	25.4	95.0/21371	105.0	1.94
FB196S			18.4	2.42	6.50	32.3	130.0/29244	143.0	3.37

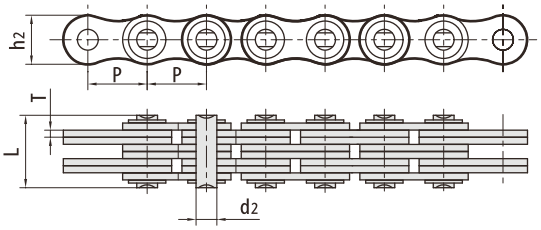

Plate lacing

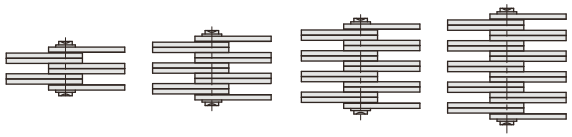

RBL chain number	Pitch P mm	Plate lacing	plate depth h2 max mm	Plate thickness T max mm	Pin diameter d2 max mm	Pin length L max mm	Tensile strength Q min kN/LBF	Average Tensile strength Qo kN	Weight q kg/m
BL1266F1	38.1	6X6	35.7	5.6	12.70	78.9	453.7/102063	499.0	15.69
BL1666F4	50.8	6X6	48.2	7.2	17.46	99.2	867.0/195040	953.7	27.27
LL2488F1	38.1	8X8	33.4	5.0	14.63	94.0	680.0/152864	748.0	16.71
LL3244F1	50.8	4X4	42.0	6.0	17.81	61.6	520.0/116978	572.0	12.90
LL3266F1		6X6				86.0	780.0/175467	858.0	18.90
LL3288F1		8X8				110.0	1040.0/233956	1144.0	24.89
LL321010F1		10X10				134.3	1300.0/292445	1430.0	30.89
LL3244F3	50.8	4X4	43.1	6.0	17.76	60.0	520.0/116978	572.0	13.06
LL3266F3		6X6				84.4	780.0/175467	858.0	19.44
LL3288F3		8X8				108.6	1040.0/233956	1144.0	25.43
LL3244F4	50.8	4X4	42.0	6.4	17.81	67.5	520.0/116980	572.0	13.82
LL3266F4		6X6				92.8	780.0/175467	858.0	20.17
LL3288F7		8X8				117.0	1040.0/233800	1144.0	26.30
LL4066F1	63.5	6X6	57.5	6.3	19.85	100.0	1166.2/262162	1283.0	29.30
LL4088F1		8X8				126.0	1558.2/350283	1714.0	38.10
LL4088F3	63.5	8X8	57.5	6.0	19.85	119.0	1395.0/313596	1535.0	35.79
LL4044F4	63.5	4X4	52.7	8.0	22.89	80.8	780.0/175351	860.0	21.82
LL4888F3	76.2	8X8	73.0	7.2	34.67	138.5	1840.0/413632	2024.0	56.02
LL481010F3		10X10				165.5	2340.0/526032	2574.0	69.18

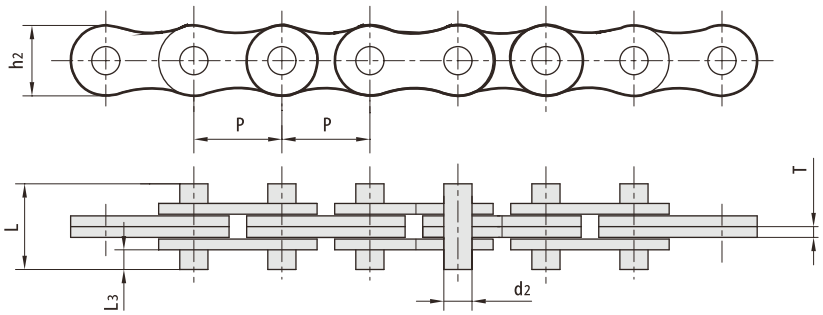

RBL chain number	Pitch	plate depth	Plate thickness	Pin diameter	Pin length		Tensile strength	Average Tensile strength	Weight
	P mm	h2 max mm	T max mm	d2 max mm	L max mm	L3 mm	Q min kN/LBF	Qo kN	q kg/m
AL422F1-D 2	12.700	11.00	1.60	3.96	14.4	3.80	14.1/3172	15.5	0.50
AL522-D 2	15.875	12.80	2.03	5.10	16.0	3.90	22.0/4950	23.0	0.69
AL522-D 2F1					19.0	5.40			0.73
AL522F1-D2	15.800	12.70	2.00	5.09	16.1	3.90	30.38/6834	32.0	0.66
AL622-DD3F1	19.050	16.90	3.25	5.94	22.3	4.40	50.0/11240	55.0	1.44
AL644F4-D2	19.050	14.60	3.10	5.90	22.5	4.90	36.0/8093	40.0	1.14
BL422-DD3	12.700	12.07	2.03	5.08	31.4	11.50	22.24/50000	24.5	0.91
LH1222-D2	19.050	18.10	3.25	7.92	22.6	4.60	48.93/11000	54.0	1.66
LH1222F7-DD3					29.4	8.00	48.93/11001	55.0	1.80
LH1222-DD3F1					29.0	7.75	48.93/10999	53.8	1.80
LH1246-DD3F1					42.5	4.75	97.9/22008	112.5	3.88
LH1622F1	25.400	24.10	4.00	9.53	34.0	8.80	84.5/19010	93.0	2.40
LH1622-D2					36.0	9.80			2.83
LH1622-DD3F1					45.0	14.30			3.04
LH1622-DD3F2					25.4	4.45			2.60
BL822F1-D 2	25.400	24.10	4.60	8.80	32.4	6.80	84.5/19010	93.0	3.03
BL822HF1-D 2				9.53	32.4				3.07
BL822HF2-DD3	25.400	24.00	5.00	9.53	35.0	7.05	84.5/19010	97.5	2.55
BL1022F1-D 2	31.750	29.00	5.60	11.30	41.2	8.40	130.0/29245	143.0	4.49
BL1022H-D2	31.750	29.70	5.60	11.10	41.2	8.40	130.0/29245	143.0	4.69
LH2022-DD3F1	31.750	29.70	4.80	11.10	30.4	5.50	115.6/25987	127.2	3.89
LL1222F3-D2	19.050	14.50	2.25	5.72	22.0	6.30	44.1/9920	48.5	0.89
LL1222F5-DD3	19.050	14.50	3.00	5.72	29.0	8.30	45.1/10139	49.5	1.17
LL1222F5-DD3F1	19.050	14.50	3.00	5.72	22.0	4.80	45.1/10140	50.5	1.10
LL1622-D2	25.400	21.00	3.10	8.28	36.1	11.70	58.0/l3050	64.0	1.92
LL1622F7-DD3	25.400	21.00	3.05	8.28	35.0	11.20	75.4/l6950	79.2	1.85
LL1622F7-DD3F1	25.400	20.00	3.00	8.28	30.5	9.00	58.0/l3040	63.8	1.65
LL1623F1-D D 3	25.400	21.00	4.00	8.28	34.0	7.00	60.0/13488	66.0	2.70
F1422-DD3	14.290	13.00	2.03	4.97	19.1	5.20	27.5/6182	30.0	0.76
1922V-D2	19.050	16.70	3.17	6.10	22.6	4.65	55.0/12364	60.5	1.40
F2022-D2	20.750	19.00	3.40	7.65	23.0	4.50	50.0/11500	55.0	1.79
F2422-D2	23.950	22.20	3.86	8.69	27.8	5.90	60.0/13500	66.0	2.37
F2422F1-D2	24.000	22.00	4.00	9.00	27.0	5.40	60.0/13500	66.0	2.39

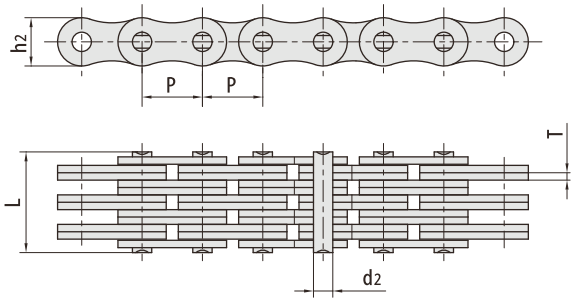

Plate lacing

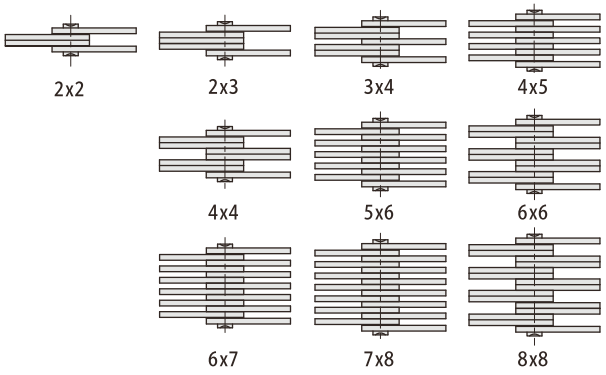

RBL chain number	Pitch P mm	Plate lacing	plate depth h2 max mm	Plate thickness T max mm	Pin diameter d2 max mm	Pin length L max mm	Chain length for 100 pitches (±0.25%) mm	Tensile strength Q min kN/LBF	Weight q kg/m
1222	12.700	2X2	10.6	1.70	4.45	9.2	1262	21.0/4721	0.44
1234		3X4				14.2		31.0/6974	0.75
1244		4X4				16.1		42.0/9442	0.86
1256		5X6				21.1		53.0/12045	1.17
1266		6X6				23.0		63.0/14162	1.27
1288		8X8				29.9		85.0/19318	1.70
1523	15.875	2X3	12.7	1.94	5.08	12.1	1580	29.0/6590	0.75
1534		3X4				16.5		46.0/10454	1.04
1543		△ 4X3				16.5		46.0/10455	1.05
1544		4X4				18.6		58.0/13181	1.18
1545		4X5				20.3		58.0/13181	1.33
1556		5X6				24.0		72.0/16363	1.63
1566		6X6				26.2		87.0/19772	1.77
1567		6X7				28.0		90.0/20454	1.91
1578		7X8				32.5		101.0/22954	2.20
1588		8X8				34.0		115.0/26136	2.34
1944	19.050	4X4	15.0	2.29	5.72	21.3	1891	73.0/16590	1.58
1966		6X6				30.7		110.0/25000	2.37
1978		7X8				37.7		122.0/27426	2.98
1988		8X8				40.0		140.0/31817	3.13

Note: △ means special link plate combination

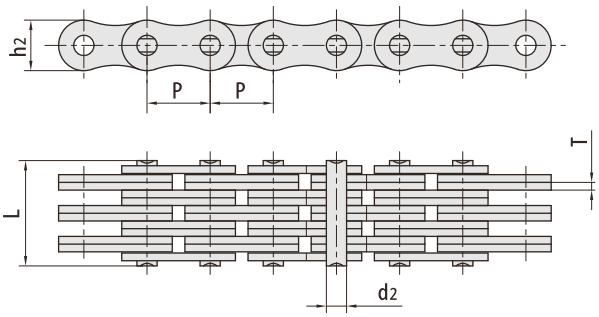

Plate lacing

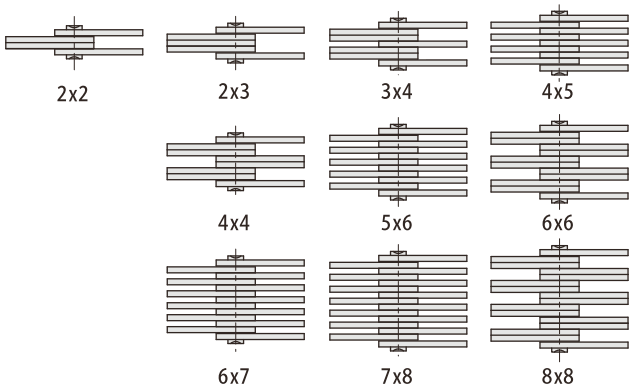

RBL chain number	Pitch P mm	Plate lacing	plate depth h2 max mm	Plate thickness T max mm	Pin diameter d2 max mm	Pin length L max mm	Chain length for 100 pitches (±0.25%) mm	Tensile strength Q min kN/LBF	Weight q kg/m
2522	25.400	2X2	20.2	3.06	8.28	15.5	2532	72.0/16186	1.47
2523		2X3				18.8		72.0/16363	1.83
2534		3X4				25.3		108.0/24545	2.55
2544		4X4				29.5		145.0/32597	2.92
2545		4X5				31.6		144.0/30727	3.26
2556		5X6				38.2		180.0/40908	3.96
2567		6X7				43.8		216.0/49090	4.68
2578		7X8				50.0		252.0/57272	5.39
2588		8X8				52.8		290.0/65908	5.77
3134	31.750	3X4	22.8	4.10	10.19	33.3	3168	160.0/35968	4.16
3144		4X4				37.5		214.0/48109	4.24
3166		6X6				54.3		304.0/68339	6.33
3188		8X8				71.1		428.0/96214	8.40
1244F3	12.700	4X4	11.0	1.43	4.45	13.9	1262	24.97/7861	0.78
1266F1		6X6				19.9		52.46/7861	1.06

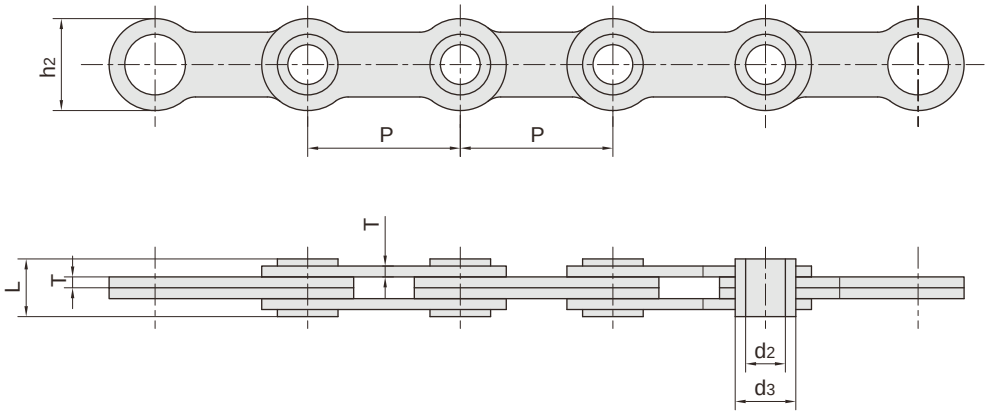

RBL chain number	Pitch P mm	Plate lacing	plate depth h2 max mm	Plate thickness T max mm	Pin diameter d2 max mm	Pin diameter d3 max mm	Pin length L max mm	Tensile strength Q min kN/LBF	Average Tensile strength Qo kN	Weight q kg/m
LF36	36.513	2X2	22.3	2.03	10.2	14.4	12.0	20.0/4496	25.0	0.85
LF36F2	36.513	2X2	24.0	2.50	9.5	14.9	15.0	30.0/6744	37.5	1.19
LF36F3	36.513	2X2	24.0	2.50	10.0	14.9	15.0	30.0/6744	37.5	1.16
LF36F4	36.513	2X2	23.6	2.60	8.2	11.0	16.6	15.0/3372	30.0	1.25
LF36F6	36.513	2X2	22.0	2.60	9.5	14.5	14.5	35.0/7868	37.5	1.15
LF36F7	36.513	2X2	22.4	2.60	9.6	13.0	14.7	31.0/6969	40.5	1.05
LF36F8	36.513	2X2	23.6	2.60	10.0	13.0	16.6	15.0/3372	30.0	1.25

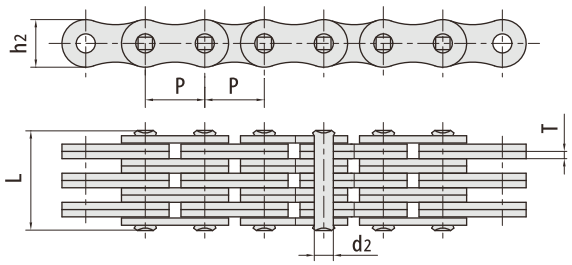

Plate lacing

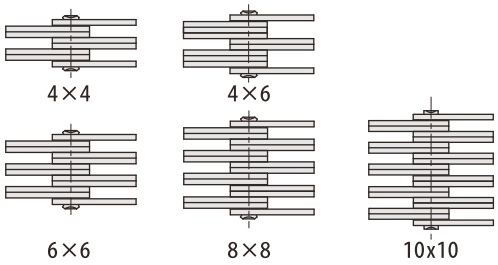

RBL chain number	Pitch P mm	Plate lacing	plate depth h2 max mm	Plate thickness T max mm	Pin diameter d2 max mm	Pin length L max mm	Tensile strength Q min kN/LBF	Average Tensile strength Qo kN	Weight q kg/m
LH2044DG)	31.75	4X4	30.18	4.80	11.10	43.8	231.3/51996	254.4	7.60
LH2066DG)	31.75	6X6	30.18	4.80	11.10	64.0	347.0/78008	380.0	11.65
LH2444DG)	38.10	4X4	36.20	5.60	12.70	51.3	302.5/68002	332.8	10.30
LH2466DG)	38.10	6X6	36.20	5.60	12.70	75.5	453.7/101992	475.0	11.52
LH2488DG)	38.10	8X8	36.20	5.60	12.70	96.5	605.0/136004	665.5	21.60
LH2844DG)	44.45	4X4	42.20	6.40	14.27	57.5	382.6/66008	400.0	14.12
LH2846DG)	44.45	4X6	42.20	6.40	14.27	73.0	382.6/66009	400.0	17.63
LH2866DG)	44.45	6X6	42.20	6.40	14.27	83.2	706.0/158709	810.0	21.09
LH3234DG)	50.80	3X4	48.20	7.20	17.46	57.9	440.4/99002	506.0	15.49
LH3244DG)	50.80	4X4	48.20	7.20	17.46	65.1	573.8/128990	602.0	17.67
LH3246DG)	50.80	4X6	48.20	7.20	17.46	80.0	573.8/128990	602.0	22.20
LH3266DG)	50.80	6X6	48.20	7.20	17.46	96.7	867.4/194991	911.0	26.70
LH3288DG)	50.80	8X8	48.20	7.20	17.46	123.3	1156.5/259981	1214.0	35.00
LH4044DG)	63.50	4X4	60.33	9.91	23.81	91.5	867.4/194992	954.1	31.60
LH4066DG)	63.50	6X6	60.33	9.91	23.81	131.2	1301.1/292487	1496.0	48.10
LH2466F2DG)	38.10	6X6	36.20	5.60	12.70	75.5	648.0/145670	710.0	11.52
LH2488F4DG)	38.10	8X8	36.20	5.60	12.70	97.3	800.0/179840	880.0	21.69
LH3266DGF1)	50.80	6X6	48.20	7.20	17.46	94.2	993.6/223361	1143.0	26.35
LH3288DGF2)	50.80	8X8	48.20	7.20	17.46	124.5	1364.6/306774	1500.0	35.09
LH3288F7DG)	50.80	8X8	48.20	7.20	17.46	127	1513.0/340122	1664.3	35.19
B12088F2DG)	63.50	8X8	58.20	9.70	23.81	170.0	1734.8/389983	1995.0	56.74
112466DG)	38.10	6X6	33.40	5.00	14.63	67.4	510.0/114648	536.0	13.00
112866DG)	44.45	6X6	36.00	6.00	15.90	80.2	600.0/134880	660.0	16.31
114066DG)	63.50	6X6	52.70	8.00	22.89	106.5	1080.0/242793	1245.0	31.62
114088DG)	63.50	8X8	52.70	8.00	22.89	140.0	1400.0/314733	1650.0	42.10
112844DGF1)	44.45	4X4	36.00	6.00	15.90	54.7	400.0/69923	450.0	10.92
112866CGF1)	44.45	6X6	36.00	6.00	15.90	80.2	650.0/146120	715.0	16.20
113244F2DG)	50.80	4X4	43.10	6.00	17.76	55.0	520.0/116900	570.0	12.62
113244F6DG)	50.80	4X4	42.00	6.00	17.81	57.5	520.0/116900	570.0	12.35
113266F6DG)	50.80	6X6	42.00	6.00	17.81	81.7	780.0/175344	858.0	18.30
113266DGF1)	50.80	6X6	42.00	6.40	17.81	86.0	780.0/175344	858.0	19.53
113266F3DG)	50.80	6X6	43.10	6.00	17.76	79.9	780.0/178344	858.0	18.84
113288F6DG)	50.80	8X8	42.00	6.00	17.81	106.0	1040.0/233792	1144.0	24.30
113288DGF2)	50.80	8X8	42.00	6.40	17.81	112.0	1040.0/233792	1144.0	25.91
114088F2DG)	63.50	8X8	52.70	8.20	22.89	140.0	1440.0/323725	1670.0	42.39

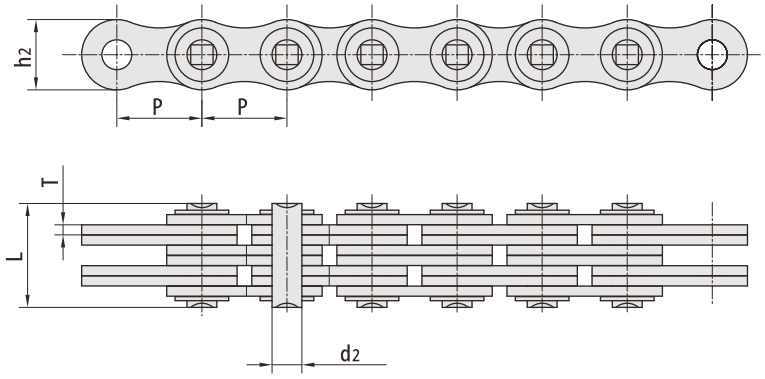

Plate lacing

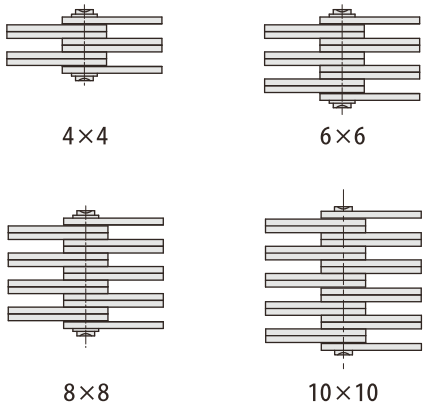

RBL chain number	Pitch P mm	Plate lacing	plate depth h2 max mm	Plate thickness T max mm	Pin diameter d2 max mm	Pin length L max mm	Tensile strength Q min kN/LBF	Average Tensile strength Qo kN	Weight q kg/m
LL3244DG)		4X4				65.0	520.0/116895	598.0	13.73
LL3266DG)	50.80	6X6	42.00	6.40	17.81	90.8	780.0/175344	897.0	19.94
LL3288DG)		8X8				117.0	1040.0/233792	1196.0	26.10
LL321010F10DG)	50.80	10X10	42.00	6.00	17.81	134.3	1300.0/292240	1430.0	30.89
LL4066F5DG)	63.50	6X6	52.70	8.00	22.89	112.7	1080.0/242794	1245.0	32.59
LL4088F4DG)	63.50	8X8	52.70	8.00	22.89	144.0	1400.0/314720	1540.0	42.38

Outside clevis

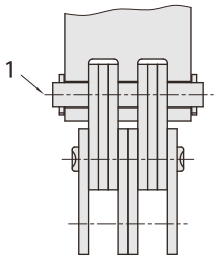

Inside clevis

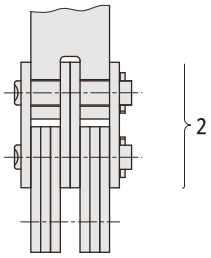

Clevis type

Outside clevis

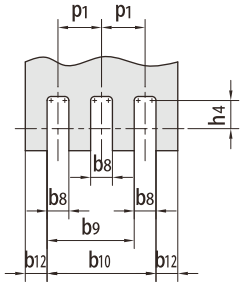

Inside clevis

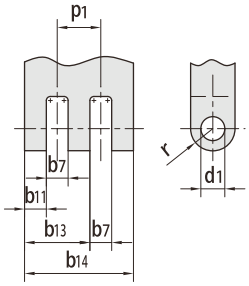

Dimension symbols of clevis

ISO chain number	ANSI RBL chain number	b7 mm	b8 mm	b9 mm	b10 mm	b11 max mm	b12 max mm	b13 max mm	b14 max mm	p1 nom mm	d1 min mm	h4 min mm	r max mm
LH0822	BL422	-	4.41	-	-	4.03	3.12	-	-	-	5.11	6.35	6.35
LH0823	BL423	-	6.53	-	-	6.05	3.12	-	-	-			
LH0834	BL434	2.21	4.33	10.68	-	4.03	3.12	10.20	-	6.35			
LH0844	BL444	4.41	4.41	12.89	-	4.03	3.12	12.25	-	8.47			
LH0846	BL446	4.41	6.53	17.12	-	6.05	3.12	16.32	-	10.59			
LH0866	BL466	4.41	4.41	12.89	21.36	4.03	3.12	12.25	20.47	8.47			
LH1022	BL522	-	5.24	-	-	4.80	3.72	-	-	-	5.98	7.92	7.92
LH1023	BL523	-	7.76	-	-	7.20	3.72	-	-	-			
LH1034	BL534	2.62	5.14	12.69	-	4.80	3.72	12.12	-	7.55			
LH1044	BL544	5.24	5.24	15.31	-	4.80	3.72	14.56	-	10.07			
LH1046	BL546	5.24	7.76	20.35	-	7.20	3.72	19.40	-	12.59			
LH1066	BL566	5.24	5.24	15.31	25.38	4.80	3.72	14.56	24.31	10.07			
LH1222	BL622	-	6.96	-	-	6.41	4.95	-	-	-	7.96	9.53	9.53
LH1223	BL623	-	10.31	-	-	9.61	4.95	-	-	-			
LH1234	BL634	3.48	6.83	16.88	-	6.41	4.95	16.18	-	10.05			
LH1244	BL644	6.96	6.96	20.36	-	6.41	4.95	19.43	-	13.40			
LH1246	BL646	6.96	10.31	27.06	-	9.61	4.95	25.89		16.75			
LH1266	BL666	6.96	6.96	20.36	33.76	6.41	4.95	19.43	32.45	13.40			
LH1622	BL822	-	8.59	-	-	7.93	6.13	-	-	-	9.56	12.70	12.70
LH1623	BL823	-	12.73	-	-	11.89	6.13	-	-	-			
LH1634	BL834	4.29	8.43	20.86	-	7.93	6.13	19.97	-	12.42			
LH1644	BL844	8.59	8.59	25.15	-	7.93	6.13	23.98	-	16.56			
LH1646	BL846	8.59	12.73	33.43	-	11.89	6.13	31.96	-	20.70			
LH1666	BL866	8.59	8.59	25.15	41.71	7.93	6.13	23.98	40.04	16.56			

Note: 1-connecting pin 2-connecting linka

a-the connecting link should be used with a press fit outer plate

Outside clevis

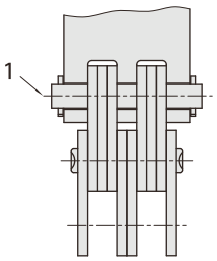

Inside clevis

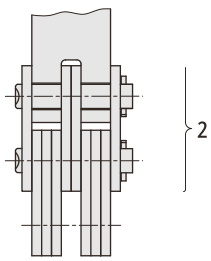

Clevis type

Outside clevis

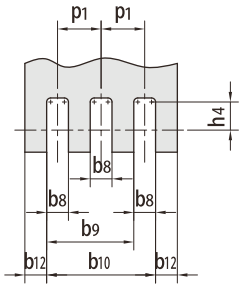

Inside clevis

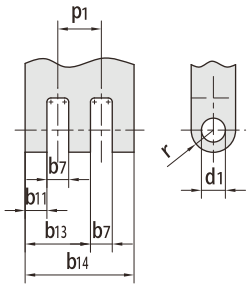

Dimension symbols of clevis

ISO chain number	ANSI RBL chain number	b7 mm	b8 mm	b9 mm	b10 mm	b11 max mm	b12 max mm	b13 max mm	b14 max mm	p1 nom mm	d1 min mm	h4 min mm	r max mm
LH2022	BL1022	-	10.26	-	-	9.48	7.35	-	-	-	11.14	15.88	15.88
LH2023	BL1023	-	15.21	-	-	14.22	7.35	-	-	-			
LH2034	BL1034	5.13	10.08	24.93	-	9.48	7.35	23.86	-	14.85			
LH2044	BL1044	10.26	10.26	30.06	-	9.48	7.35	28.65	-	19.80			
LH2046	BL1046	10.26	15.21	39.96	-	14.22	7.35	38.18	-	24.75			
LH2066	BL1066	10.26	10.26	30.06	49.86	9.48	7.35	28.65	47.82	19.80			
LH2422	BL1222	-	12.05	-	-	11.16	8.66	-	-	-	12.74	19.05	19.05
LH2423	BL1223	-	17.87	-	-	16.74	8.66	-	-	-			
LH2434	BL1234	6.02	11.84	29.31	-	11.16	8.66	28.05	-	17.46			
LH2444	BL1244	12.05	12.05	35.33	-	11.16	8.66	33.68	-	23.28			
LH2446	BL1246	12.05	17.87	46.97	-	16.74	8.66	44.89	-	29.10			
LH2466	BL1266	12.05	12.05	35.33	58.61	11.16	8.66	33.68	56.20	23.28			
LH2822	BL1422	-	13.76	-	-	12.76	9.90	-	-	-	14.31	22.23	22.23
LH2823	BL1423	-	20.41	-	-	19.13	9.90	-	-	-			
LH2834	BL1434	6.88	13.53	33.48	-	12.76	9.90	32.04	-	19.95			
LH2844	BL1444	13.76	13.76	40.36	-	12.76	9.90	38.47	-	26.60			
LH2846	BL1446	13.76	20.41	53.66	-	19.13	9.90	51.28	-	33.25			
LH2866	BL1466	13.76	13.76	40.36	66.97	12.76	9.90	38.47	64.18	26.60			
LH3222	BL1622	-	15.65	-	-	14.53	11.28	-	-	-	17.49	25.40	25.4
LH3223	BL1623	-	23.22	-	-	21.80	11.28	-	-	-			
LH3234	BL1634	7.82	15.40	38.11	-	14.53	11.28	36.48	-	22.71			
LH3244	BL1644	15.65	15.65	45.93	-	14.53	11.28	43.80	-	30.28			
LH3246	BL1646	15.65	23.22	61.07	-	21.80	11.28	58.38	-	37.85			
LH3266	BL1666	15.65	15.65	45.93	76.22	14.53	11.28	43.80	73.07	30.28			
LH4022	BL2022	-	20.53	-	-	19.19	14.86	-	-	-	23.83	31.75	31.75
LH4023	BL2023	-	30.49	-	-	28.78	14.86	-	-	-			
LH4034	BL2034	10.27	20.23	50.11	-	19.19	14.86	48.11	-	29.88			
LH4044	BL2044	20.53	20.53	60.37	-	19.19	14.86	57.76	-	39.84			
LH4046	BL2046	20.53	30.49	80.30	-	28.78	14.86	76.99	-	49.80			
LH4066	BL2066	20.53	20.53	60.37	100.22	19.19	14.86	57.76	96.33	39.84			

Note: 1-connecting pin 2-connecting linka

a-the connecting link should be used with a press fit outer plate

Outside clevis

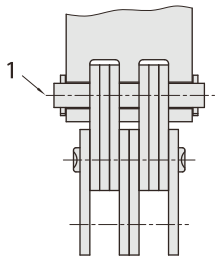

Inside clevis

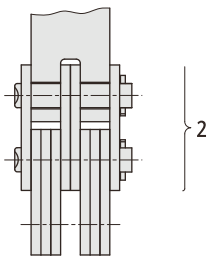

Outside clevis

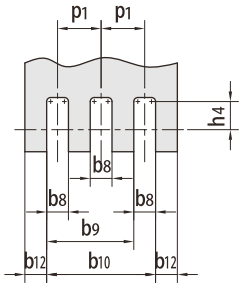

Inside clevis

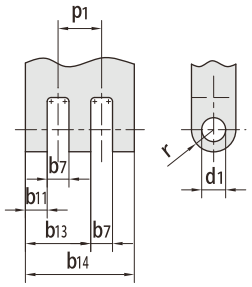

Clevis type

Dimension symbols of clevis

ISO chain number	b7 mm	b8 mm	b9 mm	b10 mm	b11 max mm	b12 max mm	b13 max mm	b14 max mm	p1 nom mm	d1 min mm	h4 min mm	r max mm
LL0822	-	3.35	-	-	2.97	2.33	-	-	-			
LL0844	3.35	3.35	9.71	-	2.97	2.33	9.07	-	6.35	4.46	6.00	6.35
LL0866	3.35	3.35	9.71	16.06	2.97	2.33	9.07	15.17	6.35			
LL1022	-	3.58	-	-	3.14	2.48	-	-	-			
LL1044	3.58	3.58	10.33	-	3.14	2.48	9.58	-	6.75	5.09	8.00	7.92
LL1066	3.58	3.58	10.33	17.08	3.14	2.48	9.58	16.01	6.75			
LL1222	-	4.16	-	-	3.61	2.85	-	-	-			
LL1244	4.16	4.16	11.96	-	3.61	2.85	11.03	-	7.80	5.73	9.00	9.52
LL1266	4.16	4.16	11.96	19.76	3.61	2.85	11.03	18.45	7.80			
LL1622	-	6.81	-	-	6.15	4.80	-	-	-			
LL1644	6.81	6.81	19.81	-	6.15	4.80	18.64	-	13.00	8.30	12.00	12.70
LL1666	6.81	6.81	19.81	32.81	6.15	4.80	18.64	31.14	13.00			
LL2022	-	7.86	-	-	7.08	5.55	-	-	-			
LL2044	7.86	7.86	22.86	-	7.08	5.55	21.45	-	15.00	10.21	14.00	15.88
LL2066	7.86	7.86	22.86	37.86	7.08	5.55	21.45	35.82	15.00			
LL2422	-	10.91	-	-	10.02	7.80	-	-	-			
LL2444	10.91	10.91	31.91	-	10.02	7.80	30.26	-	21.00	14.65	18.00	19.05
LL2466	10.91	10.91	31.91	52.91	10.02	7.80	30.26	50.50	21.00			
LL2822	-	13.46	-	-	12.46	9.68	-	-	-			
LL2844	13.46	13.46	39.46	-	12.46	9.68	37.57	-	26.00	15.92	20.00	22.20
LL2866	13.46	13.46	39.46	65.47	12.46	9.68	37.57	62.68	26.00			
LL3222	-	13.51	-	-	12.39	9.68	-	-	-			
LL3244	13.51	13.51	39.51	-	12.39	9.68	37.38	-	26.00	17.83	23.00	25.40
LL3266	13.51	13.51	39.51	65.52	12.39	9.68	37.38	62.37	26.00			
LL4022	-	17.21	-	-	15.87	12.38	-	-	-			
LL4044	17.21	17.21	50.41	-	15.87	12.38	47.80	-	33.20	22.91	28.00	31.75
LL4066	17.21	17.21	50.41	83.62	15.87	12.38	47.80	79.73	33.20			
LL4822	-	21.41	-	-	19.84	15.45	-	-	-			
LL4844	21.41	21.41	62.82	-	19.84	15.45	59.72	-	41.40	29.26	34.00	38.10
LL4866	21.41	21.41	62.82	104.20	19.84	15.45	59.72	99.60	41.40			

Note: 1-connecting pin 2-connecting linka

a-the connecting link should be used with a press fit outer plate

Connecting pin

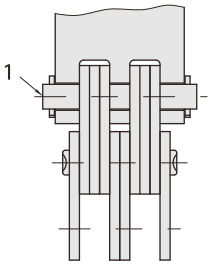

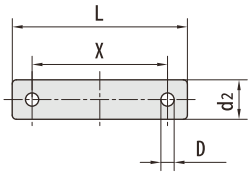

ISO chain number	ANSI RBL chain number	Width between holes X min mm	Pin length L max mm	Pin diameter d2 max mm	Hole diameter D mm
LH0822	BL422	10.8	17.2	5.08	1.6
LH0823	BL423	12.9	19.3		
LH0834	BL434	17.0	23.4		
LH0844	BL444	19.2	25.6		
LH0846	BL446	23.5	29.9		
LH0866	BL466	27.7	34.1		
LH1022	BL522	12.8	20.8	5.94	2.0
LH1023	BL523	15.3	23.3		
LH1034	BL534	20.2	28.2		
LH1044	BL 544	22.9	30.9		
LH1046	BL546	27.9	35.9		
LH1066	BL566	32.9	40.9		
LH1222	BL622	17.0	29.8	7.92	3.2
LH1223	BL623	20.3	33.1		
LH1234	BL634	26.9	39.7		
LH1244	BL644	30.4	43.2		
LH1246	BL646	37.1	49.9		
LH1266	BL666	43.8	56.6		
LH1622	BL822	21.0	33.8	9.53	3.2
LH1623	BL823	25.1	37.9		
LH1634	BL834	33.2	46.0		
LH1644	BL844	37.5	50.3		
LH1646	BL846	45.8	58.6		
LH1666	BL866	54.1	66.9		
LH2022	BL1022	25.1	41.1	11.10	4.0
LH2023	BL1023	30.0	46.0		
LH2034	BL1034	39.7	55.7		
LH2044	BL1044	44.9	60.9		
LH2046	BL1046	54.8	70.8		
LH2066	BL1066	64.7	80.7		

Connecting pin

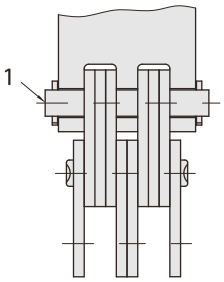

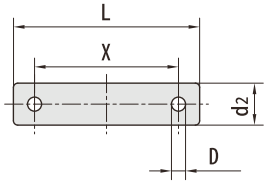

ISO chain number	ANSI RBL chain number	Width between holes X min mm	Pin length L max mm	Pin diameter d2 max mm	Hole diameter D mm
LH2422	BL1222	29.5	45.5	12.70	4.0
LH2423	BL1223	35.3	51.3		
LH2434	BL1234	46.7	62.7		
LH2444	BL1244	52.8	68.8		
LH2446	BLI 246	64.4	80.4		
LH2466	BL1266	76.0	92.0		
LH2822	BL1422	33.7	49.7	14.27	4.0
LH2823	BL1423	40.3	56.3		
LH2834	BL1434	53.4	69.4		
LH2844	BL1444	60.3	76.3		
LH2846	BL1446	73.6	89.6		
LH2866	BL1466	86.9	102.9		
LH3222	BL1622	38.3	58.3	17.46	5.0
LH3223	BL1623	45.9	65.9		
LH3234	BL1634	60.8	80.8		
LH3244	BL1644	68.6	88.6		
LH3246	BLI 646	83.7	103.7		
LH3266	BL1666	98.9	118.9		
LH4022	BL2022	50.4	70.4	23.81	5.0
LH4023	BL2023	60.3	80.3		
LH4034	BL2034	79.9	99.9		
LH4044	BL2044	90.2	110.2		
LH4046	BL2046	110.1	130.1		
LH4066	BL2066	130.0	150.0		

Connecting pin

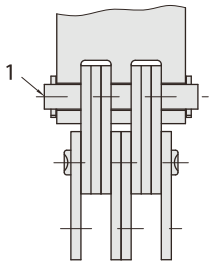

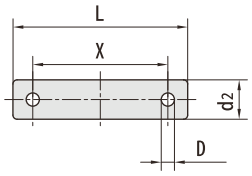

ISO chain number	Width between holes X min mm	Pin length L max mm	Pin diameter d2 max mm	Hole diameter D mm
LL0822	8.1	14.5		
LL0844	14.5	20.9	4.45	1.6
LL0866	20.8	27.2		
LL1022	8.6	15.0		
LL1044	15.4	21.8	5.08	1.6
LL1066	22.1	28.5		
LL1222	10.0	18.0		
LL1244	17.8	25.8	5.72	2.0
LL1266	25.6	33.6		
LL1622	16.5	29.3		
LL1644	29.5	42.3	8.28	3.2
LL1666	42.5	55.3		
LL2022	19.1	31.9		
LL2044	34.1	46.9	10.19	3.2
LL2066	49.1	61.9		
LL2422	26.6	42.6		
LL2444	47.6	63.6	14.63	4.0
LL2466	68.6	84.6		
LL2822	32.9	48.9		
LL2844	58.9	74.9	15.90	4.0
LL2866	84.9	100.9		
LL3222	33.0	53.0		
LL3244	59.0	79.0	17.81	5.0
LL3266	85.0	105.0		
LL4022	42.1	67.3		
LL4044	75.3	100.5	22.89	6.3
LL4066	108.5	133.7		
LL4822	52.4	77.6		
LL4844	93.8	119.0	29.24	6.3
LL4866	135.2	160.4		

Connecting pin

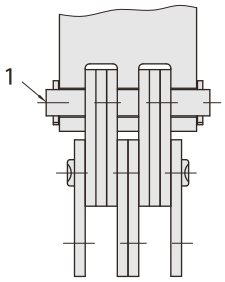

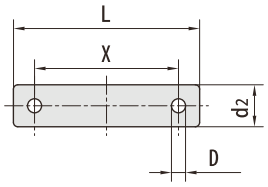

ISO chain number	Width between holes X min mm	Pin length L max mm	Pin diameter d2 max mm	Hole diameter D mm
LL2466DG)	67.7	85.0	14.63	5.0
LL2844DGF1)	66.0	83.4	15.90	5.0
LL2866DG)	73.6	90.8		
LL3266DGFl)	85.7	104.0	17.81	5.0
LL3288DGF2)	117.0	134.0		5.0
LL3244F2DG)	73.2	90.2		4.7
LL3266F6DG)	85.7	104.0		5.0
LL4066DG)	104.3	125.3	22.89	6.3
LL4088F20G)	169.0	195.0		6.0

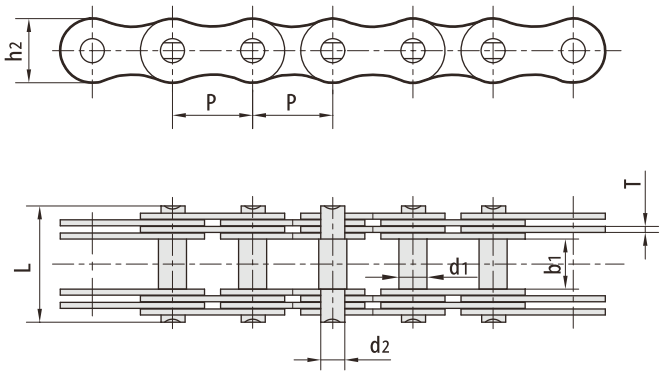

Plate lacing

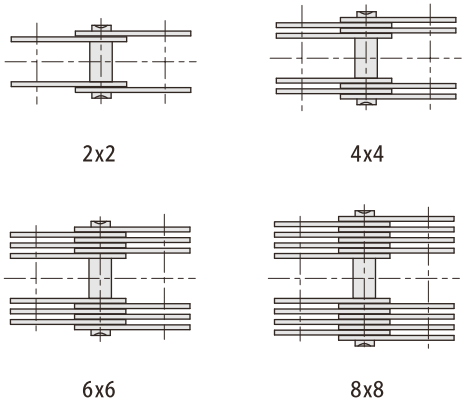

RBL chain number	Pitch	Width between inner plates	Plate lacing	Pin diameter		Pin length	Plate depth	plate thickness	Tensile strength	Weight
	P mm	b1 mm		d1 max mm	d2 max mm	L max mm	h2 max mm	T max mm	Q min kN/LBF	q kg/m
MP15	15	12	2X2	5	4	25	12	2.03	5.0/1125	0.7
MP20	20	15	2X2	8	6	28	15	2.03	12.5/2812	1.1
MP25	25	18	2X2	10	8	36	18	3.00	25.0/5624	1.8
MP30	30	20	4X4	11	9	51	20	3.00	40.0/8999	3.4
MP35	35	22	4X4	12	10	53	26	3.00	60.0/13498	4.5
MP40	40	25	4X4	14	12	58	32	3.00	80.0/17998	5.0
MP45	45	30	4X4	17	14	63	35	3.00	100.0/22497	7.0
MP50	50	35	4X4	22	18	90	40	4.50	150.0/33746	11.3
MP55	55	40	4X4	24	21	108	42	6.00	200.0/44994	14.5
MP60	60	45	4X4	26	23	114	46	6.00	250.0/56243	17.1
MP70	70	50	6X6	32	28	148	55	6.00	375.0/84364	34.0
MP80	80	60	6X6	36	32	159	60	6.00	500.0/112486	39.0
MP90	90	70	6X6	40	36	184	70	7.00	750.0/168728	53.0
MP100	100	80	8X8	45	40	224	80	7.00	1000.0/224972	77.0
MP110	110	90	8X8	50	45	236	90	7.00	1250.0/281215	90.0
MP120	120	100	8X8	55	50	262	100	8.00	1500.0/337458	112.0

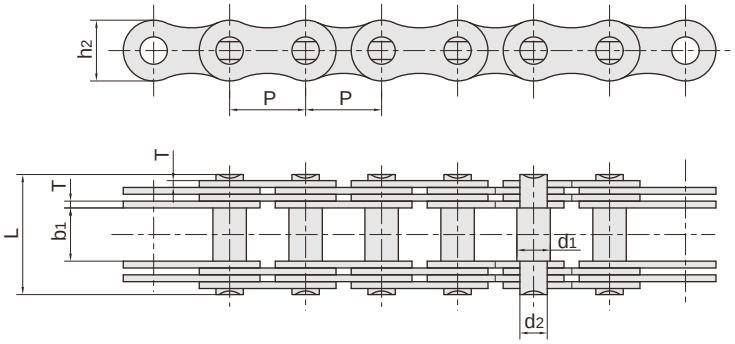

Plate lacing

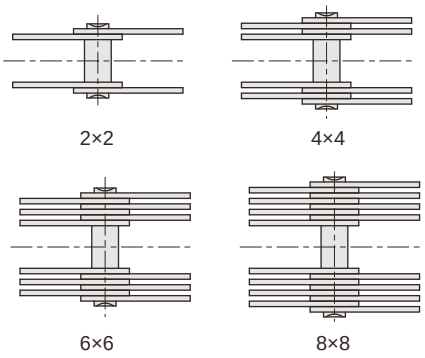

RBL chain number	Pitch P mm	Width between inner plates b1 mm	Plate lacing	Pin diameter d1 max mm	Pin diameter d2 max mm	Pin length L max mm	Plate depth h2 max mm	plate thickness T max mm	Tensile strength Q min kN/LBF	Weight q kg/m
LF30	30.0	16.5	2X2	6.0	5.00	27.7	15.7	2.03	20.0/4496	0.72
MP50F2	50.0	38.0	6X6	22.0	18.00	85.0	40.0	3.00	250.0/56202	11.11
MP 50.8	50.8	36.0	6X6	22.0	17.81	85.4	42.0	3.25	200.0/44961	11.90
MP70F1	70.0	21.0	2X2	16.5	14.00	51.5	30.5	6.00	145.0/32597	4.16
MP70F2	70.0	50.0	8X8	32.0	28.00	158.0	55.0	5.00	375.0/84303	44.00
MP70F3	70.0	52.0	8X8	32.0	28.00	160.0	55.0	5.00	375.0/84303	31.62
MP80F1	80.0	60.0	8X8	36.0	32.00	170.0	60.0	5.00	500.0/112404	35.32
*MP90F2	90.0	60.4	6X6	40.0	37.00	182.0	70.0	8.00	700.0/157366	52.70
*MP90F1	90.0	60.0	4X4	36.0	32.00	146.0	60.0	8.00	600.0/134885	32.22
*MP110F1	110.0	90.0	8X8	50.0	45.00	239.0	90.0	7.00	1250.0/281011	87.50

Note：*means straight link plate ,both end of pin with washer

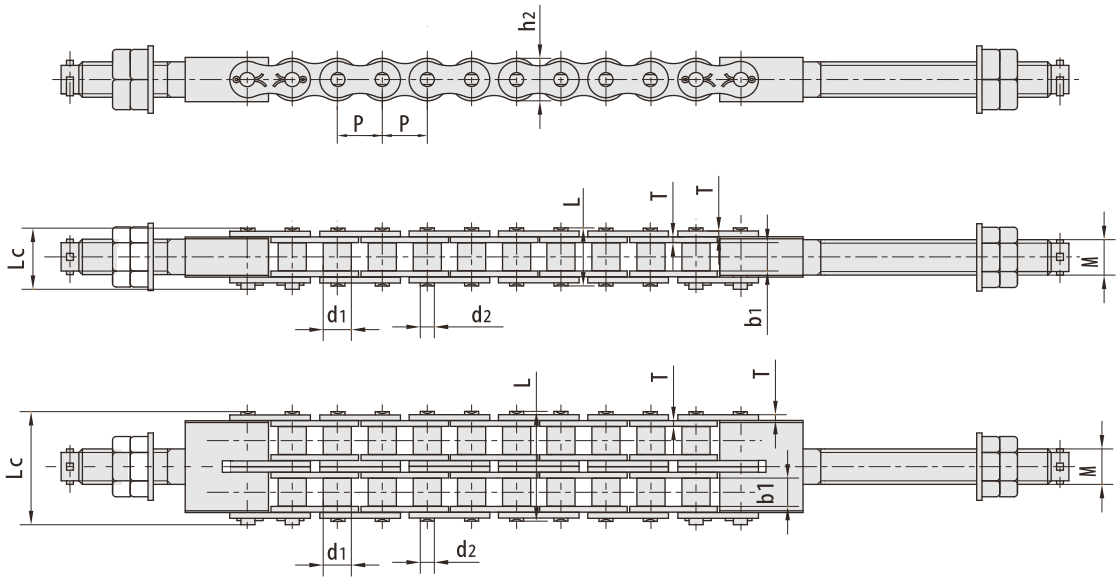

RBL chain number	Pitch	Roller diameter	Width between inner plates	Pin diameter	Pin length		Inner Plate depth	plate thickness	Bolt type	Tensile strength	Average Tensile strength	Weight
	P mm	d1 max mm	b1 min mm	d2 max mm	L max mm	Lc max mm	h2 max mm	T max mm	M mm	Q min kN/LBF	Qo kN	q kg/m
16ALT-1	25.40	15.88	15.75	7.92	32.7	36.5	24.0	3.25	M 20	71.55/16261	81.8	2.60
16ALT-2	25.40	15.88	15.75	7.92	62.7	65.8	24.0	3.25	M 20	143.10/32523	166.3	5.15
20ALT-1	31.75	19.05	18.90	9.53	40.4	44.7	30.0	4.00	M 24	107.85/24511	118.6	3.91
20ALT-2	31.75	19.05	18.90	9.53	76.4	80.5	30.0	4.00	M 24	215.70/49023	234.4	7.80
20ALT-3	31.75	19.05	18.90	9.53	112.2	116.3	30.0	4.00	M 24	323.55/73534	351.6	11.77
24ALT-1	38.10	22.23	25.22	11.10	50.3	54.3	35.7	4.80	M 30	149.20/330909	161.1	5.62
24ALT-2	38.10	22.23	25.22	11.10	95.8	99.7	35.7	4.80	M 30	298.40/67818	322.2	11.70

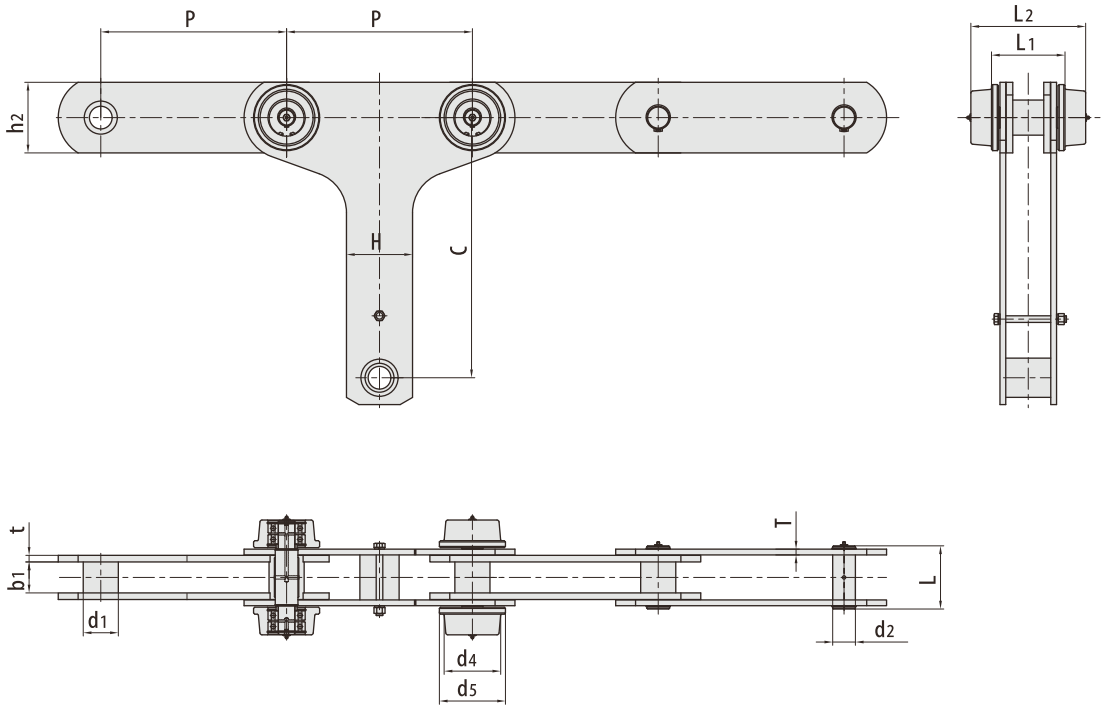

RBL chain number	Pitch	Bush diameter	Roller diameter		Width between inner plates	Pin diameter	Pin length	Plate depth	plate thickness	Atlachment dinension				Tensile strength
	P mm	d1 max mm	d4 min mm	d5 min mm	b1 min mm	d2 max mm	L max mm	h2 max mm	t/T mm	C mm	H mm	L1 mm	L2 mm	Q min kN/LBF
P450F1	450.0	85.0	137.0	158.0	75	55	153	171	16/14	630	160	178	278	1800/404640
P450F2	450.0	85.0	136.5	180.0	75	55	174	171	16/14	675	170	166	282	1764/396547
P450F4	450.0	85.0	136.5	180.0	75	55	174	171	16/14	630	160	166	282	1764/396547

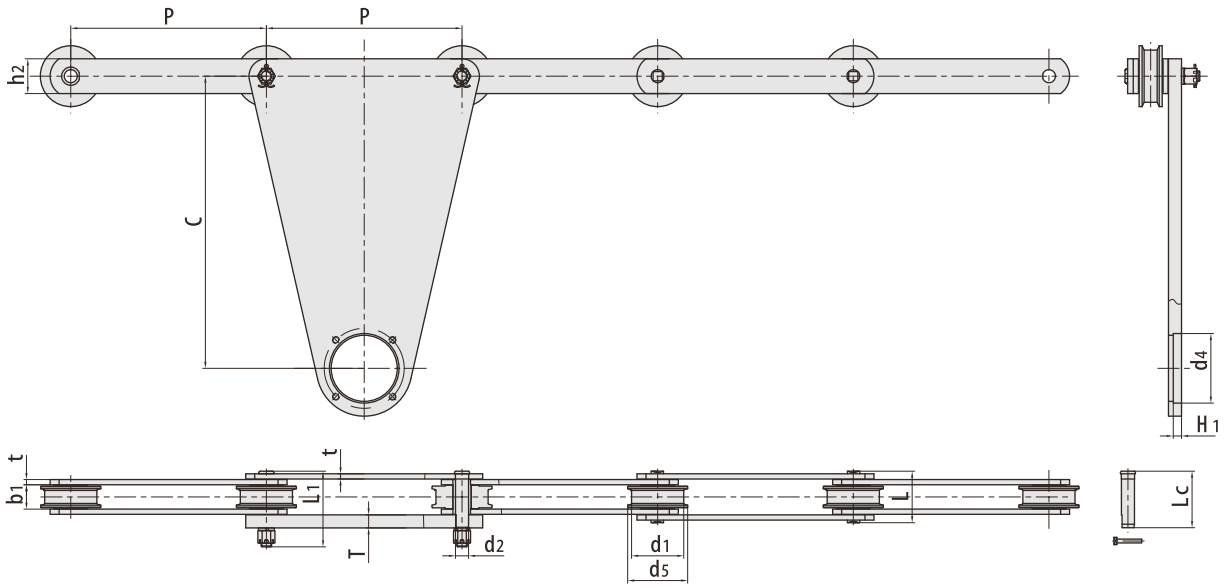

RBL chain number	Pitch	Roller diameter		Width between inner plates	Pin diameter	Pin length			Plate depth	plate thickness	Atlachment dinension			Tensile strength
	P mm	d4 min mm	d5 min mm	b1 min mm	d2 max mm	L max mm	Lc max mm	L1 max mm	h2 mm	t/T mm	C mm	d4 mm	H1 mm	Q min kN/LBF
P450F5	450	120	138	56	30	120	130	174	80	12.0/30.0	672	160	19	450.0/101160
P450F6	450	120	140	84	36	150	159	210	100	12.0/30.0	672	160	19	800.0/179840
P450F13	450	120	140	84	36	150	159	210	100	12.0/30.0	675	135	13	800.0/179840
*P460F1	460	118	138	51	36	-	134.5	173.5	90	14.0/20.0	665	110.4	-	650.0/146120
P460F2	460	120	140	84	36	150	159	202	100	12.0/25.0	675	135	13	800.0/179840
P460F3	460	130	144	60	36	126	135	185	100	12.0/30.0	650	110	-	800.0/179840
P460F5	460	100	119	55	30	118	130	160	75	12.0/20.0	570	107	-	650.0/146120

*With bearing inside roller

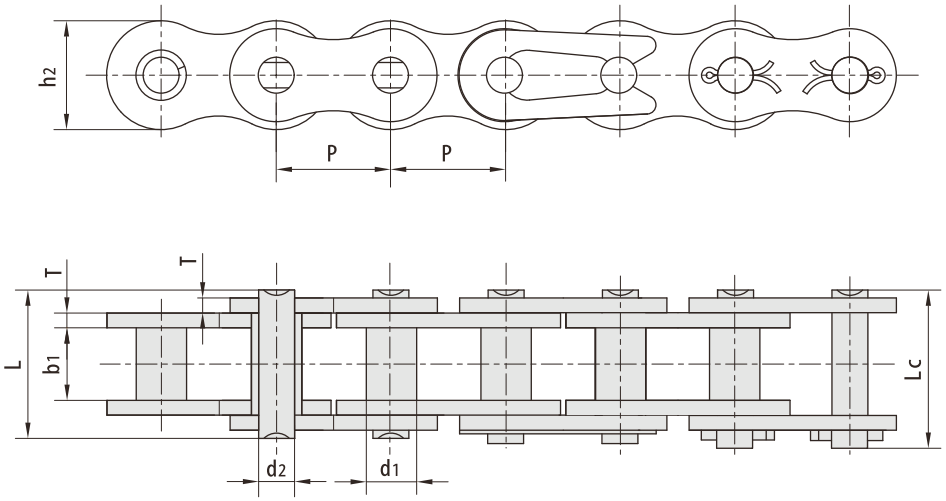

RBL chain number	Pitch	Bush diameter	Width between inner plates	Pin diameter	Pin length		Inner Plate depth	plate thickness	Tensile strength	Average Tensile strength	Weight
	P mm	d1 max mm	b1 min mm	d2 max mm	L max mm	Lc max mm	h2 max mm	T max mm	Q min kN/LBF	Qo kN	q kg/m
45-1	12.700	5.63	7.85	3.96	16.6	17.8	12.00	1.50	14.10/3205	17.5	0.54
55-1	15.875	7.03	9.40	5.08	20.7	22.2	15.09	2.03	22.20/5045	29.4	0.83
65-1	19.050	8.33	12.57	5.94	25.9	27.7	18.00	2.42	31.80/7227	41.5	1.22
85-1	25.400	11.10	15.75	7.92	32.7	35.0	24.00	3.25	56.70/I2886	69.4	2.16
105-1	31.750	13.60	18.90	9.53	40.4	44.7	30.00	4.00	88.50/20114	109.2	3.31
125-1	38.100	15.60	25.22	11.10	50.3	54.3	35.70	4.80	127.00/28864	156.3	4.97
145-1	44.450	18.00	25.22	12.70	54.4	59.0	41.00	5.60	172.40/39182	212.0	6.50
165-1	50.800	20.00	31.55	14.27	64.8	69.6	47.80	6.40	226.80/51545	278.9	8.70

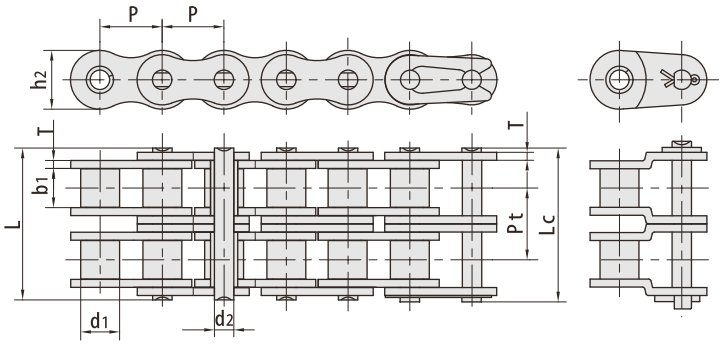

RBL chain number	Pitch	Roller diameter	Width between inner plates	Pin diameter	Pin length		Inner Plate depth	plate thickness	Transverse pitch	Tensile strength	Average Tensile strength	Weight
	P mm	d1 max mm	b1 min mm	d2 max mm	L max mm	Lc max mm	h2 max mm	T max mm	Pt mm	Q min kN/LBF	Qo kN	q kg/m
08B-2	12.70	8.51	7.75	4.45	31.2	32.2	11.8	1.60	13.92	32.0/7273	38.7	1.34
12A-2	19.05	11.91	12.57	5.94	48.8	50.5	18.0	2.42	22.78	63.6/14455	82.1	2.92
60H-2	19.05	11.91	12.57	5.94	55.3	57.1	18.0	3.25	26.11	63.6/14455	84.5	3.71
60HSP-2	19.05	11.91	12.57	5.94	55.3	57.1	18.0	3.25	26.11	96.1/21605	112.0	3.97

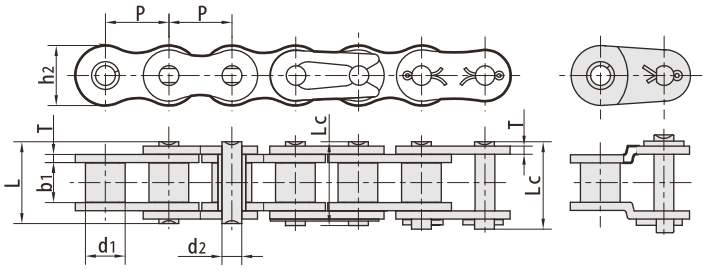

RBL chain number	Pitch	Roller diameter	Width between inner plates	Pin diameter	Pin length		Inner Plate depth	plate thickness	Tensile strength	Average Tensile strength	Weight
	P mm	d1 max mm	b1 min mm	d2 max mm	L max mm	Lc max mm	h2 max mm	T max mm	Q min kN/LBF	Qo kN	q kg/m
35HF2	9.525	5.08	4.77	3.58	15.52	—	9.00	2.03	9.0/2023	9.9	0.52
420T	12.700	7.77	6.25	3.96	14.70	—	12.00	1.50	18.62/4186	20.5	0.55
520	15.875	10.16	6.25	5.08	17.50	—	15.09	2.03	29.40/6610	32.3	0.96
520HF2	15.875	10.22	6.25	5.30	19.30	—	15.30	2.42	35.00/7869	38.5	1.25
520HF3	15.875	10.22	6.25	5.30	19.80	—	15.30	2.80/2.42	40.00/8993	44.0	1.36
520HF4	15.875	10.16	6.25	5.08	19.30	20.80	15.09	2.42	26.50/5958	29.2	1.10
520HF6	15.875	10.22	6.25	5.30	19.30	—	15.30	2.42	40.00/8993	44.0	1.25
*P22.225F3-B	22.225	15.60	14.60	9.00	36.30	38.00	23.50	4.80/4.00	75.00/I6862	82.5	3.75
*16BF26	25.400	15.88	16.00	10.00	42.50	44.20	26.80	5.60/4.80	80.00/I7986	88.0	4.66

■ 208AF2

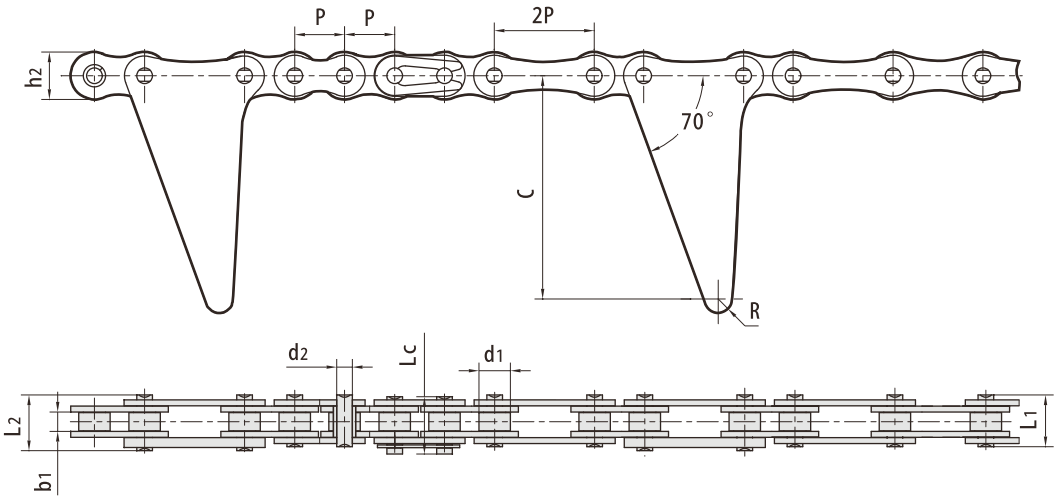

■ 208AF3

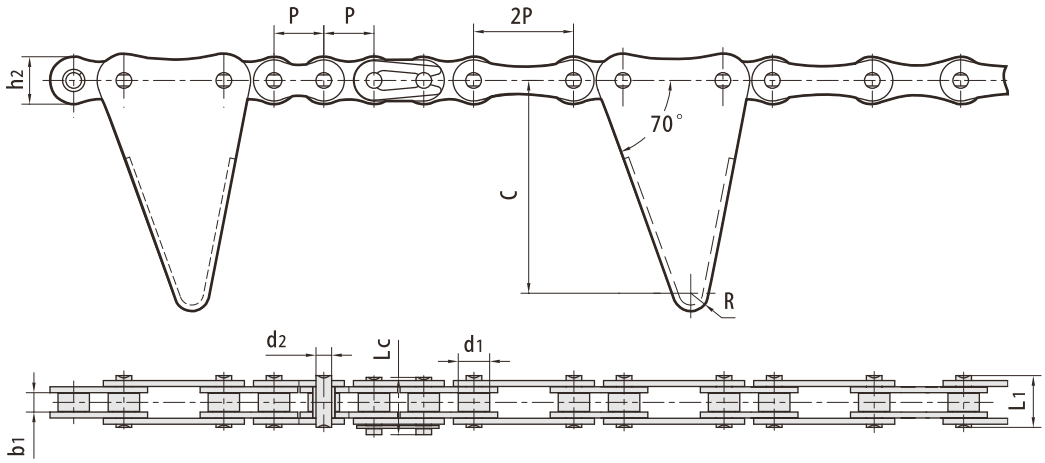

RBL chain number	Pitch	Roller diameter	Width between inner plates	Pin diameter	Pin length			Inner Plate depth	Atlachment dinension		Tensile strength	Average Tensile strength
	P mm	d1 max mm	b1 min mm	d2 max mm	L1 max mm	L2 max mm	Lc max mm	h2 max mm	C mm	R mm	Q min kN/LBF	Qo kN
208AF2	12.7	7.95	4.80	3.96	13.1	14.7	14.5	12.0	56.5	3.5	13.8/3136	16.0
208AF3	12.7	7.95	4.80	3.96	13.1	-	14.5	12.0	60.5	4.5	13.8/3136	16.0
208AF3A	12.7	7.95	7.85	3.96	16.6	-	17.8	12.0	60.5	4.5	13.8/3136	16.0

■ C210AF1

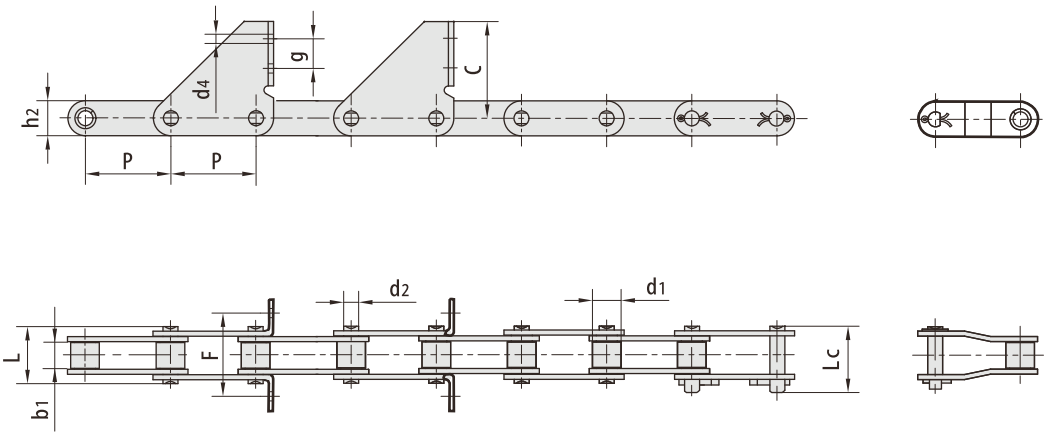

■ C212AF1

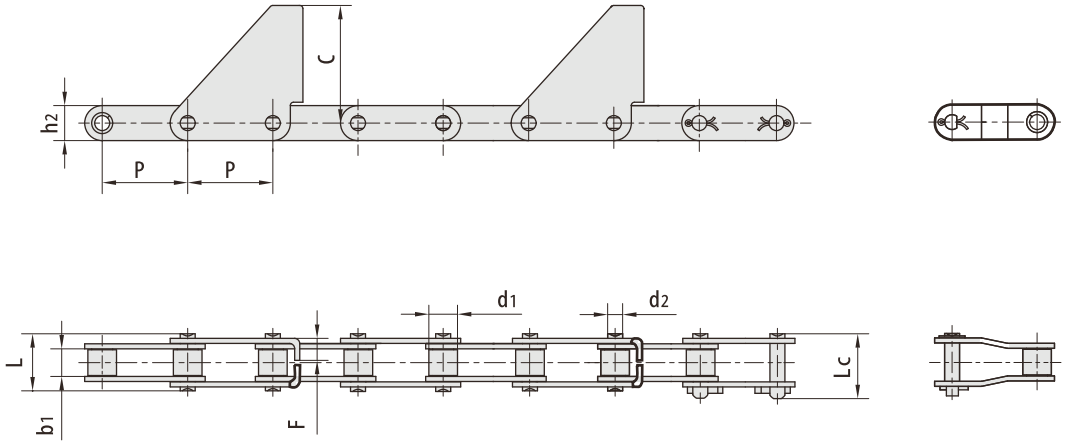

RBL chain number	Pitch	Roller diameter	Width between inner plates	Pin diameter	Pin length		Inner Plate depth	Atlachment dinension				Tensile strength	Average Tensile strength
	P mm	d1 max mm	b1 min mm	d2 max mm	L max mm	Lc max mm	h2 max mm	F mm	C mm	d4 mm	g mm	Q min kN/LBF	Qo kN
C210AF1	31.75	10.16	9.40	5.08	20.7	23.3	15.0	35.20	54.0	7.0	23.0	21.8/4955	28.5
C212AF1	38.10	11.91	12.57	5.94	25.9	28.3	18.0	10.92	56.0	-	-	31.1/7068	38.7

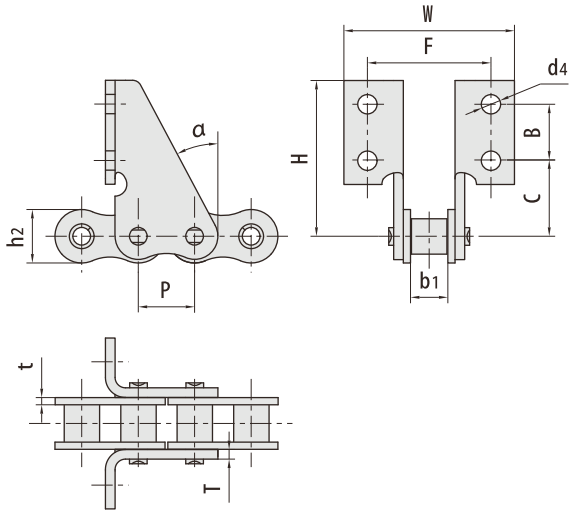

RBL chain number	P mm	h2 mm	b1 mm	F mm	W mm	B mm	C mm	H mm	d4 mm	t mm	T mm	a mm
12ASD	19.05	18.00	12.57	44.00	58.00	19.00	25.50	52.50	6.5	2.42	2.42	28°
12ASDF3	19.05	18.00	12.57	42.00	56.00	19.00	25.50	52.50	8.5	2.42	3.50	28°
12ASDF6	19.05	18.00	12.57	43.20	57.20	23.00	21.50	52.50	8.5	2.42	3.50	28°
12ASDF9	19.05	18.00	12.57	39.00	55.00	23.00	23.00	52.25	6.5	2.42	2.42	28°
12ASDF12	19.05	18.00	12.57	41.20	58.20	23.50	19.00	50.00	7.0	2.42	2.42	28°

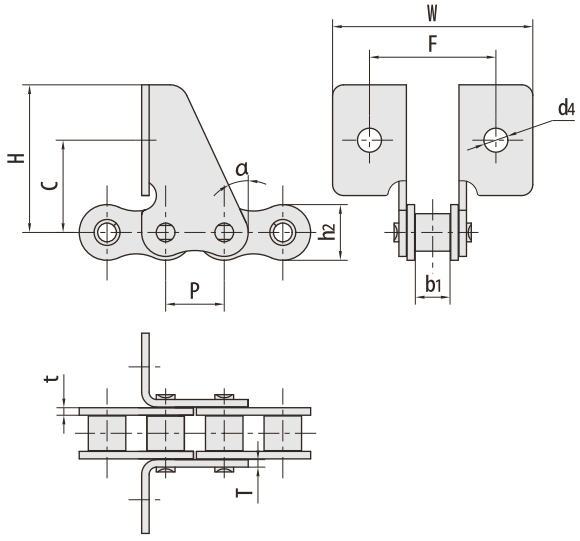

RBL chain number	P mm	h2 mm	b1 mm	F mm	W mm	C mm	H mm	d4 mm	t mm	T mm	a mm
10ASD	15.875	15.09	9.40	36.00	54.00	25.00	40.00	6.5	2.03	2.03	25°
10BSDF1	15.875	14.70	9.65	28.40	43.40	24.10	38.10	5.0	1.70	1.70	30°

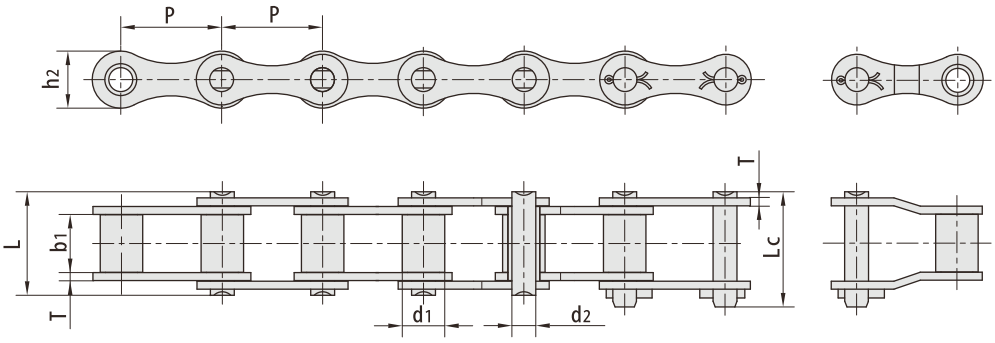

RBL chain number	Pitch	Roller diameter	Width between inner plates	Pin diameter	Pin length		Inner Plate depth	plate thickness	Tensile strength	Average Tensile strength	Weight
	P mm	d1 max mm	b1 min mm	d2 max mm	L max mm	Lc max mm	h2 max mm	T max mm	Q min kN/LBF	Qo kN	q kg/m
ZGS38	38.0	16.00	22.0	9.00	39.0	43.0	21.5	3.0	45.0/10116	54.0	2.00
ZGS38HF7	38.0	16.00	22.0	9.00	47.0	51.0	21.5	5.0	80.0/18000	88.0	2.74
ZGS38F42	38.0	16.00	22.0	9.00	43.2	46.5	21.5	4.0	45.0/10116	54.0	2.43

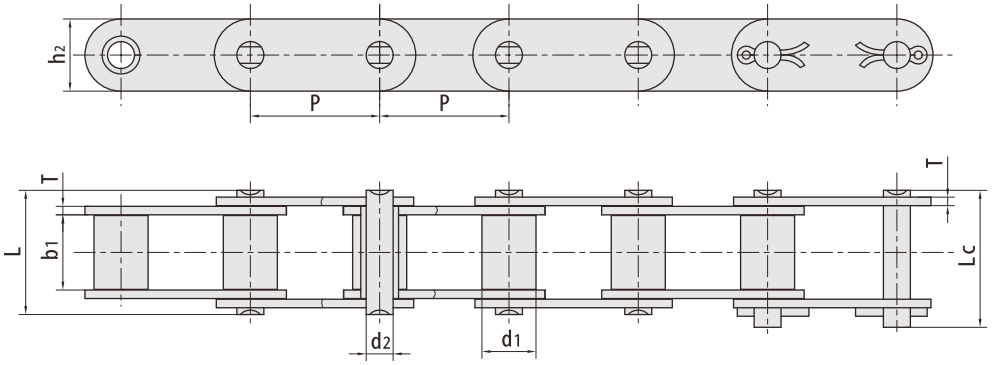

RBL chain number	Pitch	Roller diameter	Width between inner plates	Pin diameter	Pin length		Inner Plate depth	plate thickness	Tensile strength	Average Tensile strength	Weight
	P mm	d1 max mm	b1 min mm	d2 max mm	L max mm	Lc max mm	h2 max mm	T max mm	Q min kN/LBF	Qo kN	q kg/m
CZGS38F10	38.0	15.88	22.0	7.92	39.0	43.0	21.3	3.0	45.0/10116	54.0	2.39
CZGS38F11	38.0	15.88	22.0	7.92	37.1	41.0	21.2	2.5	30.0/6745	33.0	2.10
CZGS38HF12	38.0	15.88	22.0	7.92	39.9	42.7	21.2	3.2	45.0/10116	54.0	2.42
CZGS38F13	38.0	16.00	22.0	9.00	39.0	43.0	21.5	3.0	45.0/10116	54.0	2.42
CZGS38HF36	38.0	15.88	22.0	7.92	40.5	44.0	21.3	3.5	50.0/11241	55.0	2.63

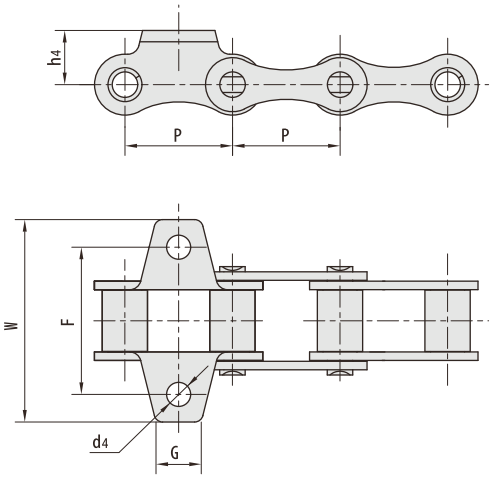

RBL chain number	P mm	G mm	F mm	W mm	h4 mm	d4 mm
ZGS38F2	38.0	16.0	52.0	71.5	19.6	11.0
ZGS38F6K1	38.0	16.0	52.0	74.6	19.6	8.5
ZGS38F10K1	38.0	20.0	52.0	72.0	17.0	8.4
ZG S38F13K1F1	38.0	20.0	52.0	80.0	17.0	8.6
ZGS38HF12K1F1	38.0	25.0	52.0	72.0	17.0	8.4
ZGS38F18	38.0	16.0	52.0	69.6	19.6	8.5
ZGS38F42K1	38.0	16.0	52.0	74.6	19.6	8.5
ZGS38F43K1	38.0	16.0	52.0	74.6	19.6	11.0
ZGS38F46	38.0	16.0	52.0	74.6	20.0	8.5

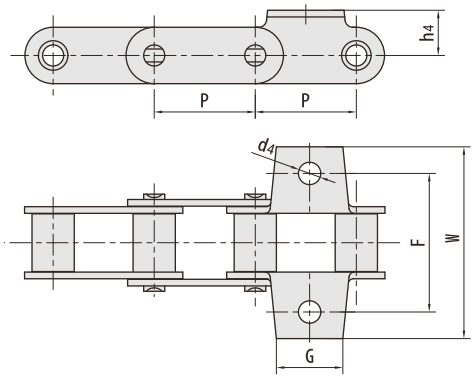

RBL chain number	P mm	G mm	F mm	W mm	h4 mm	d4 mm
CZGS38F10K1	38.0	20.0	52.0	72.0	17.0	8.4
CZGS38F13K1F1	38.0	26.5	52.0	80.0	17.0	8.6

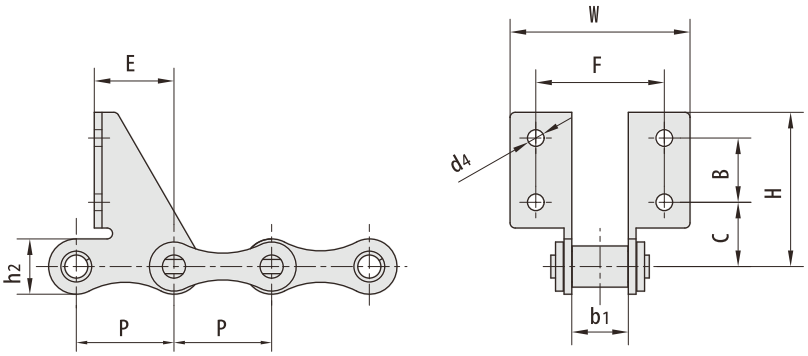

RBL chain number	P mm	b1 mm	C mm	B mm	F mm	W mm	d4 mm	E mm	H mm	h2 mm
ZGS38F5	38.0	22.0	32.0	25.0	52.0	72.0	7.0	31.0	67.0	21.5
ZGS38F8	38.0	22.0	32.0	25.0	52.0	68.0	7.0	31.0	67.0	21.5
ZGS38F14SD	38.0	22.0	25.0	25.0	50.0	70.0	6.5	31.0	60.0	21.5
ZGS38F44	38.0	22.0	25.0	25.0	52.0	72.0	7.2	30.0	60.0	21.5

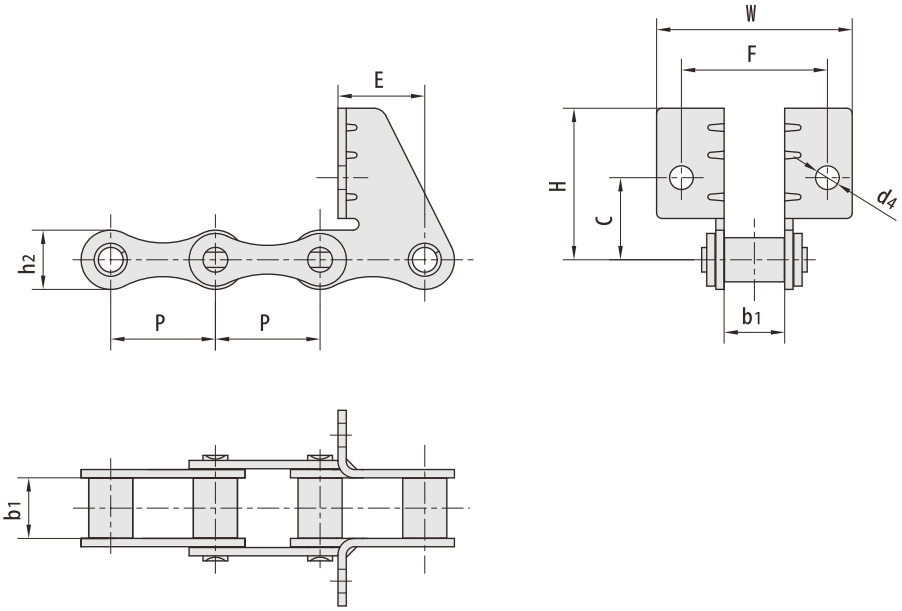

RBL chain number	P mm	b1 mm	C mm	F mm	W mm	d4 mm	E mm	H mm	h2 mm
ZGS38SDF4	38.0	22.0	30.0	52.0	70.0	8.5	31.8	55.0	21.5
ZGS38F35	38.0	22.0	29.8	53.0	71.0	8.7	31.3	55.0	21.5

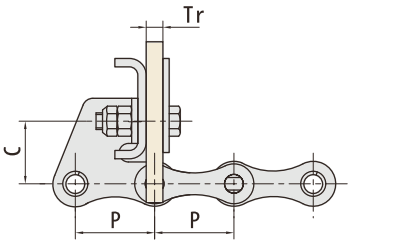

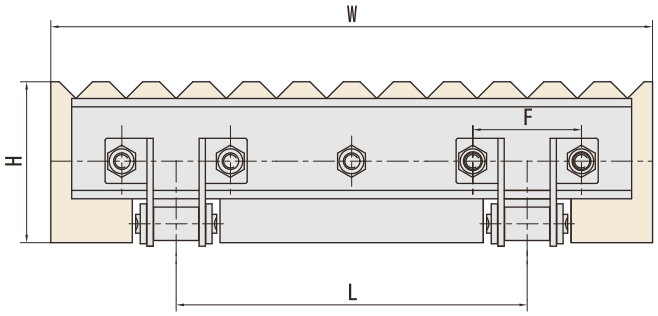

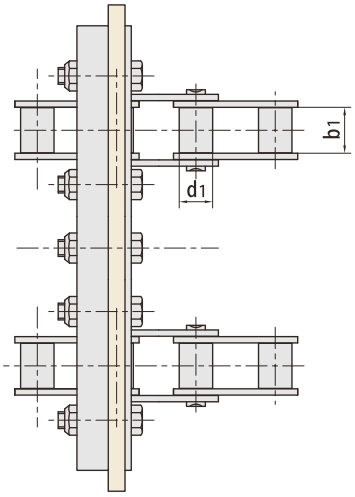

RBL chain number	Pitch	Roller diameter	Width between inner plates	Rubber attachment dimension				
	P mm	d1 max mm	b1 mm	W max mm	L mm	H max mm	F mm	Tr mm
ZGS38F47	38.0	16.0	22.0	480.0	360.0	77.0	52.0	8.0

RBL chain number	P mm	C mm	F mm	a
ZGS38F1	38.0	60.0	14.0	*32.5°*

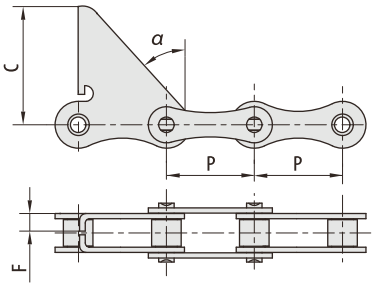

RBL chain number	P mm	C mm	F mm	W mm	d4 mm	a
ZGS38F3	38.0	30.0	52.0	68.4	6.50	43.5°
ZGS38SDF1	38.0	30.0	52.0	68.4	8.50	43.5°
ZGS38SDF5	38.0	30.0	52.0	68.0	8.60	40.5°
ZGS38SDF6	38.0	30.0	52.0	68.0	8.50	40.5°
ZGS38F32SD	38.0	30.0	52.0	68.4	6.50	43.5°

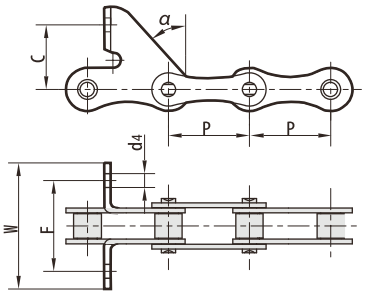

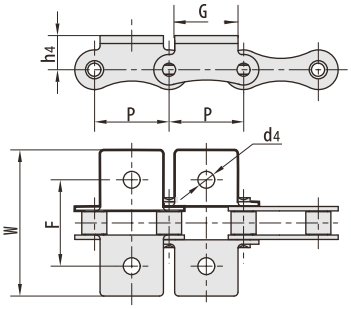

RBL chain number	P mm	C mm	F mm	W mm	h4 mm	d4 mm
ZGS38K1	38.0	32.0	53.0	83.2	20.0	8.5

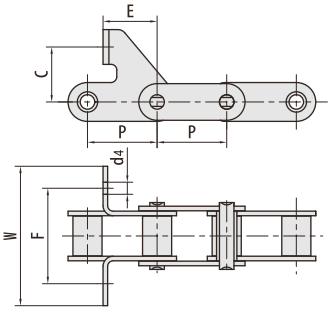

RBL chain number	P mm	C mm	F mm	W mm	d4 mm	E mm
CZGS38F10SD	38.0	30.0	52.0	80.0	6.6	19.0
CZGS38F11SDF1	38.0	30.0	52.0	76.0	6.6	29.5

RBL chain number	P mm	b1 mm	h2 mm	T mm	C mm	a
ZGS38-C6E	38.0	22.0	21.5	3.0	62.0	15°
ZGS38-C6EF1	38.0	22.0	21.5	3.0	72.0	10°
ZGS38-C6EF2	38.0	22.0	21.5	3.0	84.0	15°
ZGS38-C6EF3	38.0	22.0	21.5	3.0	53.0	13°
ZGS38-C6EF4	38.0	22.0	21.5	3.0	55.0	13°
ZGS38-CPEF6	38.0	22.0	21.5	3.0	75.0	15°

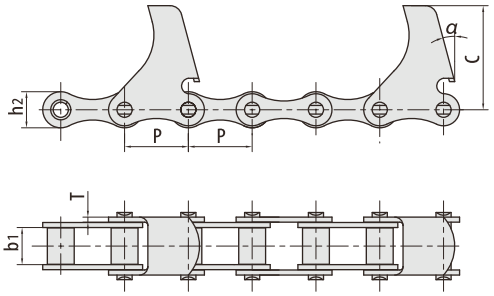

RBL chain number	P mm	b1 mm	h2 mm	d4 mm	C mm	B mm	a
ZGS38-CPEF3	38.0	22.0	65.4	7.3	65.4	19.5	15°

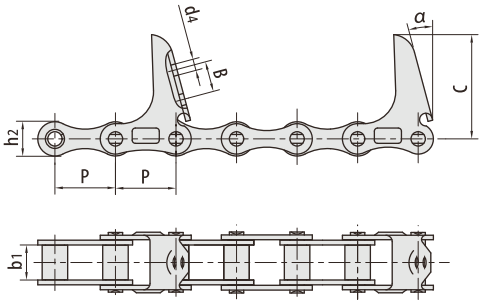

RBL chain number	P mm	b1 mm	C mm	a
ZGS38-CPEF1	38.0	22.0	60.0	22.5°

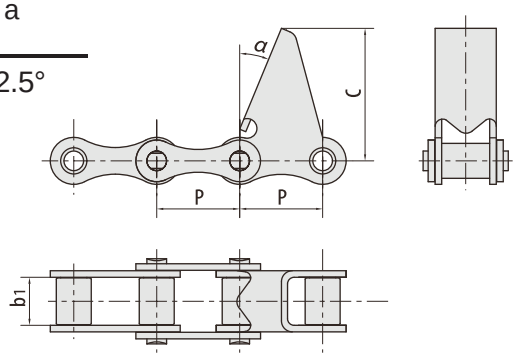

Hoisting chains

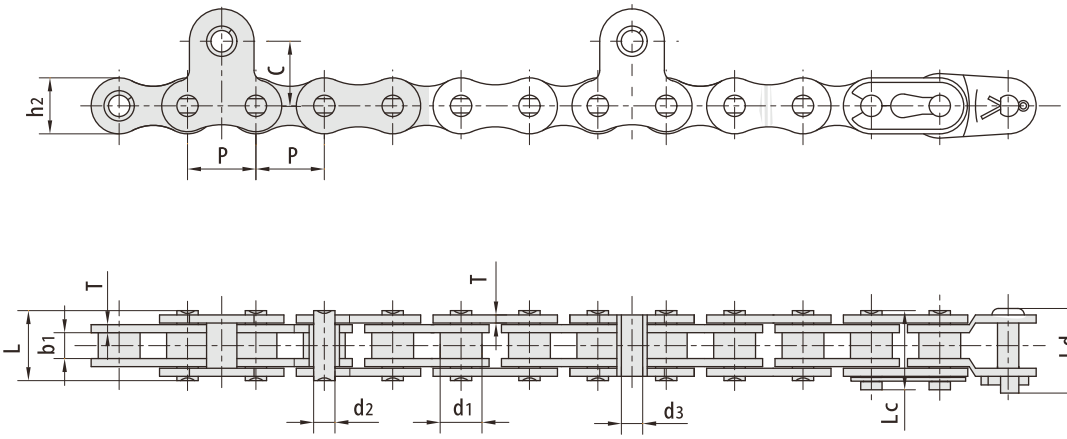

RBL chain number	Pitch	Roller diameter	Width between inner plates	Pin diameter	Pin length			inner plate depth	Plate thickness	Attachment dimension		Tensile strength	Average Tensile strength
	P mm	d1 max mm	b1 min mm	d2 max mm	L max mm	Lc max mm	Ld max mm	h2 mm	T max mm	d2 nom mm	C mm	Q min mm	Qo kN
415F1	12.7	7.77	4.90	3.64	11.0	12.1	12.95	9.5	1.1	4.02	12.0	6.86/l559	8.1
415F2	12.7	7.77	4.90	3.64	11.0	12.1	12.95	9.5	1.1	4.02	12.0	6.86/l559	8.1
415F3	12.7	7.77	4.90	3.64	11.0	12.1	12.95	9.5	1.1	4.02	12.0	6.86/l559	8.1
415F4	12.7	7.77	4.68	3.62	11.8	-	-	9.6	1.3	4.00	12.0	10.30/2341	12.1
415F5	12.7	7.77	4.68	3.63	11.8	13.0	14.00	9.6	1.3	4.00	12.0	10.30/2341	12.1
4155	12.7	7.77	4.80	3.96	12.8	14.3	15.70	12.0	1.5	4.02	12.0	15.69/3566	16.3
415S-A	12.7	7.77	4.90	3.96	12.8	14.3	15.70	12.0	1.5	4.02	12.0	13.80/3136	16.3
415SF1	12.7	7.77	4.80	3.96	13.0	14.5	-	10.4	1.5	4.50	12.0	13.93/3166	16.3
415SF4	12.7	7.77	4.80	3.96	13.0	14.5	15.70	12.0	1.5	4.00	12.0	13.80/3136	16.3
415SF6	12.7	7.77	4.80	3.96	13.0	14.5	15.70	10.4	1.5	4.00	12.0	13.93/3166	16.3
415SF7	12.7	7.77	4.80	4.00	13.0	14.5	15.70	12.0	1.5	4.50	12.0	15.69/3566	16.3
415SF10	12.7	7.77	4.80	4.00	13.0	14.5	-	12.0	1.5	4.50	12.0	13.93/3166	16.3
415SF16	12.7	7.77	4.80	3.60	11.0	12.1	13.00	12.0	1.1	4.00	12.0	6.86/l559	8.1
420JF1	12.7	7.77	6.25	3.96	14.7	16.1	18.50	12.0	1.5	4.00	12.0	16.00/3636	18.8

Plucking conveyor chain 3558T

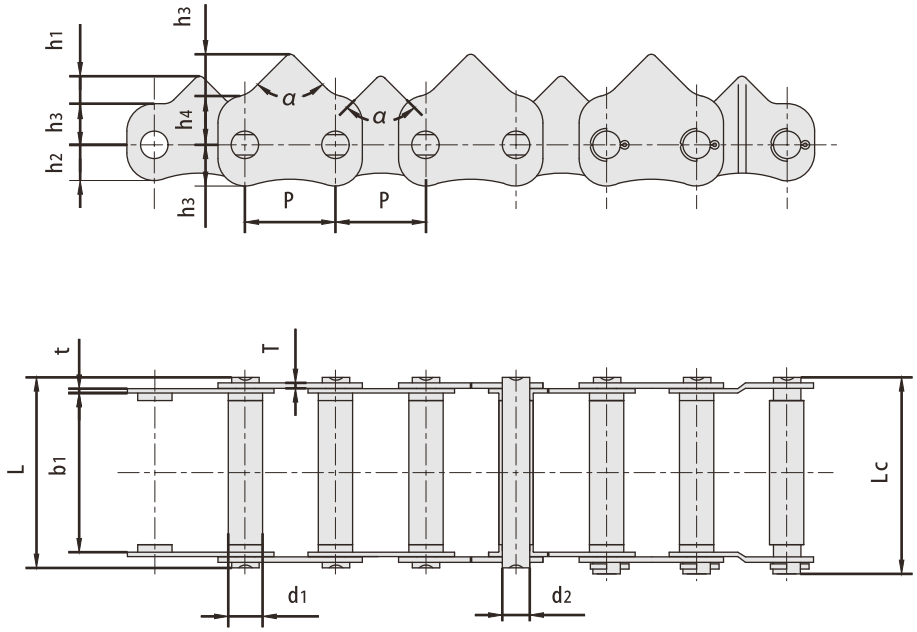

RBL chainnumber	Pitch	Roller diameter	Width between inner plates	Pin diameter	Pin length		Tooth angle	plate dimension				Plate thickness	Tensile strength	Average Tensile strength
	P mm	d1 max mm	b1 min mm	d2 max mm	L max mm	Lc max mm	a	h1 mm	h2 mm	h3 mm	h4 mm	t/T max mm	Q min mm	Qo kN
3558T-48001	35	10.1	58	7.0	69.4	72.0	90°	10	13	15	18	1.6/2.03	19.6/4457	23.0
3558T-48001F1	35	12.6	58	10.0	69.4	71.2	90°	10	13	15	18	1.6/2.03	19.6/4457	23.0
3558T-48001F2	35	10.5	58	7.0	69.4	72.0	90°	10	13	15	18	1.6	19.6/4457	22.5
3558T-48002	35	12.8	58	7.0	69.4	72.0	90°	10	13	15	18	1.6/2.03	19.6/4457	23.0

Blank page

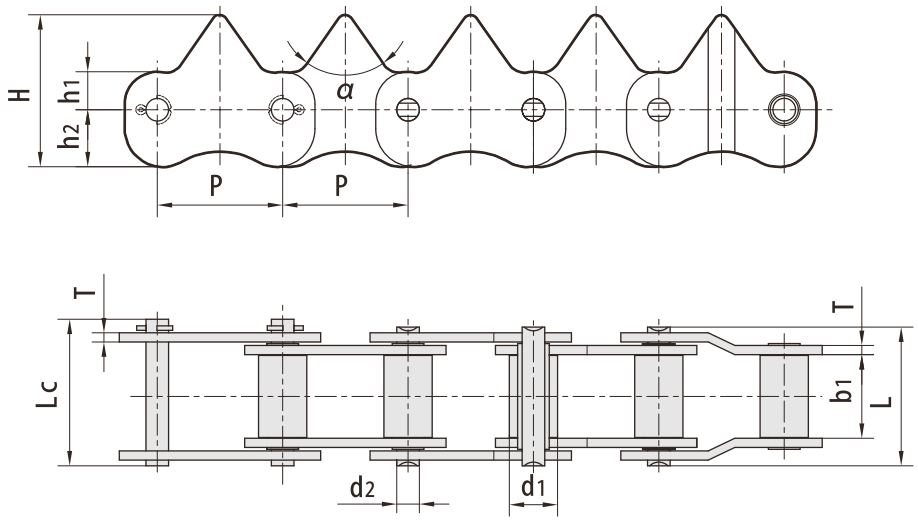

RBL chain number	Pitch	Roller diameter	Width between inner plates	Pin diameter	Pin length		Tooth angle	plate dimension			Plate thickness	Tensile strength	Average Tensile strength
	P mm	d1 max mm	b1 min mm	d2 max mm	L max mm	Lc max mm	a	h1 mm	h2 mm	H mm	t/T max mm	Q min mm	Qo kN
3322-63201	33	12.7	22.0	5.94	36.4	38.4	70°	10	15	40	2.42	19.60/4455	22.5
3325-23160	33	12.8	25.0	7.00	35.9	38.7	60°	10	13	43	1.60	21.60/4909	24.5
3325-23550	33	12.8	25.0	7.00	35.9	38.7	90°	10	13	38	1.60	21.60/4909	24.5
3325-49200	33	12.8	25.0	7.00	35.9	38.7	70°	10	13	38	1.60	21.60/4909	24.5
3325-9059	33	12.7	25.0	5.94	39.4	42.6	90°	10	13	38	2.42	19.61/4457	22.5
3325-9059F1	33	10.5	25.0	5.94	39.4	42.6	90°	10	13	38	2.42	19.61/4457	22.5
3330-27150	33	12.8	30.0	7.00	40.9	43.7	70°	10	13	38	1.60	21.60/4909	24.5
3330-28361	33	12.8	30.0	7.00	40.9	43.7	60°	10	13	43	1.60	21.60/4909	24.5
3330-3852	33	12.7	30.0	5.94	44.4	47.6	90°	10	13	38	2.42	19.61/4457	22.5
3330-66402F1	33	12.7	30.0	5.94	44.4	47.6	60°	10	13	43	2.42	19.61/4457	22.5
3330-66402F2	33	10.5	30.0	5.94	44.4	47.6	60°	10	13	43	2.42	19.61/4457	22.5
3330-74311	33	12.7	30.0	5.94	44.4	47.6	70°	10	13	38	2.42	19.61/4457	22.5
3330-74311F1	33	10.5	30.0	5.94	44.4	47.6	70°	10	13	38	2.42	19.61/4457	22.5

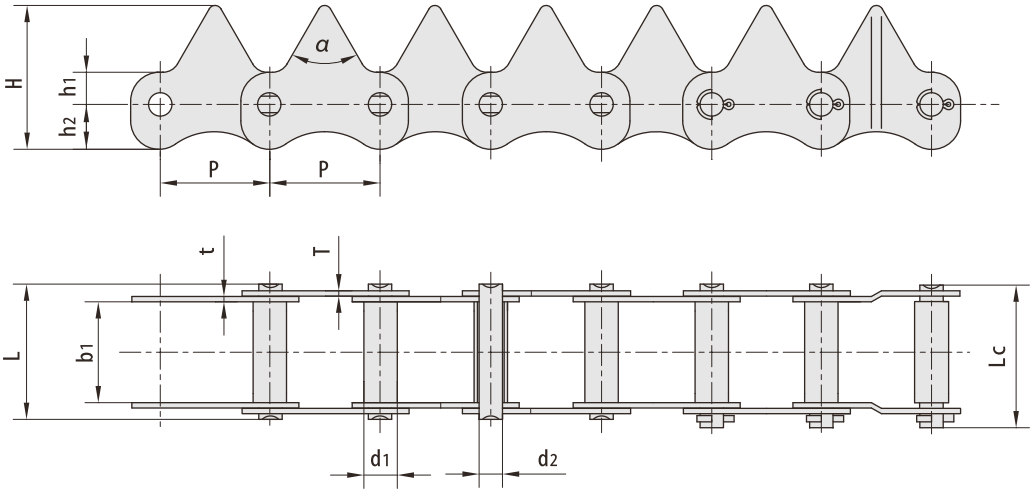

RBL chain number	Pitch	Roller diameter	Width between inner plates	Pin diameter	Pin length		Tooth angle	plate dimension			Plate thickness	Tensile strength	Average Tensile strength
	P mm	d1 max mm	b1 min mm	d2 max mm	L max mm	Lc max mm	a	h1 mm	h2 mm	H mm	t/T max mm	Q min mm	Qo kN
3322-821	33	10.1	22.0	7.0	31.50	34.80	70°	10	10	35	1.60	19.60/4455	22.5
3322-1501	33	10.1	22.0	7.0	31.50	34.80	70°	10	10	30	1.60	19.60/4455	22.5
3325-763	33	10.1	25.0	7.0	34.20	37.20	70°	10	10	30	1.60	19.60A455	22.5
3325-1012	33	10.1	25.0	7.0	34.20	37.20	70°	10	10	35	1.60	19.60/4455	22.5
3325—1E6410	33	10.1	25.0	7.0	36.80	39.00	90°	10	13	38	2.00/1.60	19.60/4455	23.0
3325-3555	33	10.1	25.0	7.0	36.80	39.00	70°	10	13	38	2.00/1.60	19.60/4455	22.5
3325-3572	33	10.1	25.0	7.0	36.80	39.00	70°	10	13	38	2.00/1.60	19.60/4455	23.0
3325-4LB1.35	33	10.1	25.0	7.0	37.00	39.50	90°	10	13	38	2.03	19.60/4455	24.0
3325-4LB1.45	33	10.1	25.0	7.0	35.60	37.60	70°	10	13	38	1.70	19.60/4455	22.5
3325-66202	33	10.1	25.0	7.0	35.20	38.00	70°	10	13	38	1.60	19.60/4455	22.5
3330-4LB1.45	33	10.1	30.0	7.0	40.30	42.70	60°	10	13	43	1.70	19.60/4455	22.5
3330-4LB 1.45-01	33	10.1	30.0	7.0	40.30	42.70	70°	10	13	38	1.70	19.60/4455	22.5
3340-1067	33	10.1	40.0	7.0	50.00	-	90°	18	10	38	1.60	19.60/4455	22.5
3340-1E8570	33	10.1	40.0	7.0	49.20	52.50	90°	18	10	38	1.60/1.20	19.60/4455	22.0
3340-3555	33	10.1	40.0	7.0	50.35	52.65	70°	18	10	43	1.60	19.60/4455	22.5
3340-3572	33	10.1	40.0	7.0	51.80	54.00	70°	10	13	38	2.00/1.60	19.60/4455	23.0
3350-3555	33	10.1	50.0	7.0	60.20	62.50	70°	18	10	43	1.60	19.60/4455	22.5
3358-1E7070	33	10.1	58.0	7.0	68.00	-	90°	18	10	38	1.60	19.60/4455	22.5
3358-1E 8350	33	10.1	58.0	7.0	68.00	72.00	90°	18	10	38	1.60	19.60/4455	22.5
3358-6365	33	10.1	58.0	7.0	68.20	70.50	70°	18	10	43	1.60	19.60/4455	22.5
3540-0875	35	10.1	40.0	7.0	50.20	52.50	70°	18	10	43	1.60	19.60/4455	22.5
3540-3572	35	10.1	40.0	7.0	50.20	52.50	70°	10	10	35	1.60	19.60/4455	22.5
3550-5080	35	10.1	50.0	7.0	60.20	62.50	70°	18	10	38	1.60	19.60/4455	22.5
3558-4LB1.35	35	13.2	58.0	9.4	70.00	73.20	90°	15	18	47	2.03	22.54/5123	27.1

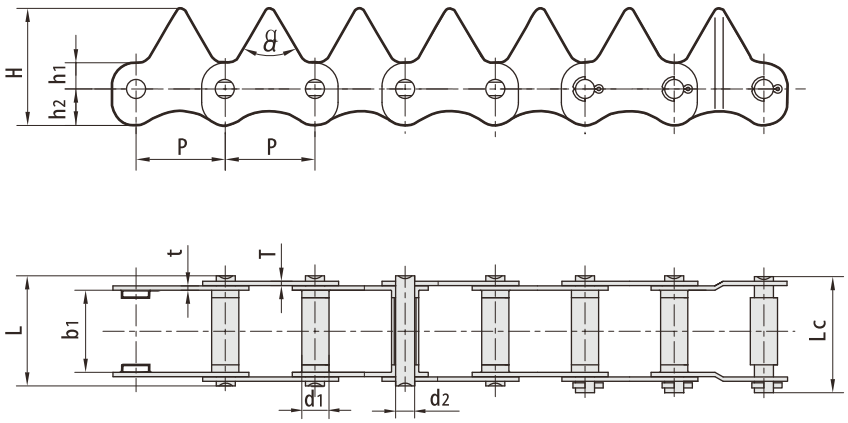

RBL chain number	Pitch	Roller diameter	Width between inner plates	Pin diameter	Pin length		Tooth angle	plate dimension			Plate thickness	Tensile strength	Average Tensile strength
	P mm	d1 max mm	b1 min mm	d2 max mm	L max mm	Lc max mm	a	h1 mm	h2 mm	H mm	t/T max mm	Q min mm	Qo kN
3318.5—A0680106	33	10.1	18.5	7.0	29.0	31.0	70°	10	13	38	1.6	19.60/4455	22.5
3318T—5010	33	10.1	18.0	7.0	28.5	31.4	70°	10	13	38	1.6	19.60/4455	22.5
3322T-27151	33	10.1	22.0	7.0	31.5	34.5	70°	10	13	38	1.6	19.60/4455	22.5
3322T-28241	33	12.1	21.3	7.0	31.8	34.1	60°	10	13	43	1.6	19.60/4455	22.5
3322T-52800	33	10.1	22.0	7.0	31.5	34.5	70°	10	13	38	1.6	17.64/4010	20.2
3322T-52800F1	33	10.1	22.0	7.0	33.0	35.7	70°	10	13	38	1.6/2.03	19.60/4455	22.5
3322T-52800F2	33	10.1	22.0	7.0	33.6	36.5	70°	10	13	38	2.03	19.60/4455	22.5
3325T-23151	33	10.1	25.0	7.0	35.5	37.7	60°	10	13	43	1.6	19.60/4455	22.5
3325T-27151	33	10.1	25.0	7.0	35.5	37.7	70°	10	13	38	1.6	19.60/4455	22.5
3325T-3650	33	10.1	25.0	7.0	35.5	37.7	70°	10	13	38	1.6	19.60/4455	22.5
3325T-3817	33	10.1	25.0	7.0	36.2	39.0	90°	10	13	38	2.0/1.6	19.61/4455	22.5
3325T-49201	33	10.1	25.0	7.0	35.5	37.7	90°	10	13	38	1.6	19.60/4455	22.5
3325T-49201F1	33	10.5	25.0	7.0	35.5	37.7	90°	10	13	38	1.6	19.60/4455	22.5
3325T-5060	33	10.1	25.0	7.0	36.8	39.0	70°	10	13	38	1.6/2.0	19.61/4455	22.5
3325T-699	33	10.1	25.0	7.0	36.2	39.3	90°	10	13	38	2.0/1.6	19.60/4455	22.5
3325T-A0680110	33	10.1	25.0	7.0	35.5	37.7	70°	10	13	38	1.6	19.60/4455	22.5
3325T-A0680110F1	33	12.6	25.0	7.0	35.5	37.7	70°	10	13	38	1.6	19.60/4455	22.5
3330T-27151	33	10.1	30.0	7.0	40.5	42.8	70°	10	13	38	1.6	19.60/4455	22.5
3330T-27151F1	33	10.1	33.0	7.0	40.9	43.7	70°	10	13	38	1.6/2.03	19.60/4455	22.5

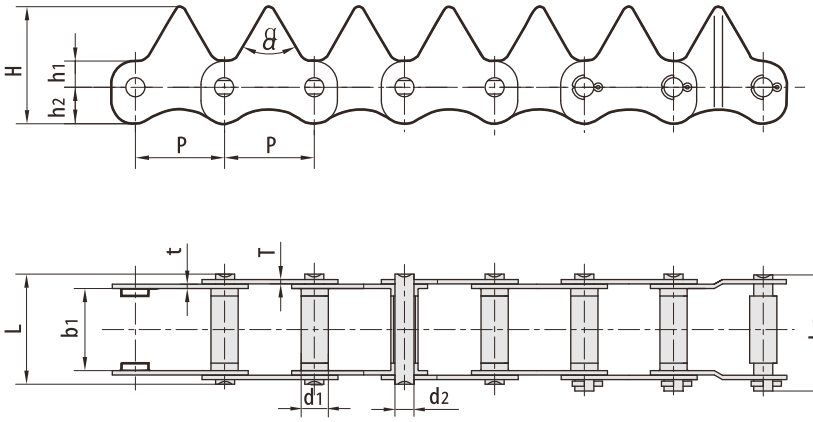

RBL chain number	Pitch	Roller diameter	Width between inner plates	Pin diameter	Pin length		Tooth angle	plate dimension			Plate thickness	Tensile strength	Average Tensile strength
	P mm	d1 max mm	b1 min mm	d2 max mm	L max mm	Lc max mm	a	h1 mm	h2 mm	H mm	t/T max mm	Q min mm	Qo kN
3330T—27152	33	12.8	30.0	7.0	40.5	42.8	70°	10	13	38	1.6	19.60/4455	22.5
3330T-28241	33	10.1	30.0	7.0	40.5	42.8	60°	10	13	43	1.6	19.60/4455	22.5
3330T-28241F1	33	12.6	30.0	7.0	40.5	42.8	60°	10	13	43	1.6	19.60/4455	22.5
3330T-28241F2	33	12.1	29.3	7.0	39.8	42.1	60°	10	13	43	1.6	19.60/4455	22.5
3330T-28242	33	12.8	30.0	7.0	40.5	42.8	60°	10	13	43	1.6	19.60/4455	22.5
3330T-3501	33	10.1	30.0	7.0	40.5	42.8	70°	10	13	38	1.6	19.60/4455	22.5
3330T-3817	33	12.1	30.0	7.0	40.5	42.8	60°	10	13	43	1.6	19.61/4455	22.5
3330T-5028	33	10.1	30.0	7.0	40.9	43.7	60°	10	13	43	1.6/2.0	19.60/4455	22.5
3330T-52200	33	10.1	30.0	7.0	40.9	43.7	60°	10	13	43	1.6/2.0	19.60/4455	22.5
3330T-53350	33	10.1	30.0	7.0	40.5	42.8	75°	10	10	30	1.6	19.60/4455	22.5
3330T-53981	33	12.8	30.0	7.0	40.5	42.8	70°	10	13	38	1.6	19.60/4455	22.5
3330T-5441	33	10.1	30.0	7.0	40.9	43.7	60°	10	13	43	1.64.0	19.61/4455	22.5
3330T-59750	33	10.1	30.0	7.0	39.5	42.5	60°	10	13	43	1.6	19.60A455	22.5
3330T-711	33	10.1	33.0	7.0	40.7	43.5	90°	10	13	38	1.6	19.60/4455	22.5
3335T-27151	33	10.1	35.0	7.0	45.5	47.8	70°	10	13	38	1.6	19.60/4455	22.5
3350T-6379	33	10.1	50.0	7.0	60.2	62.5	75°	18	10	43	1.6	19.60/4455	22.5
3350T-744	33	10.1	50.0	7.0	60.2	63.0	90°	18	10	38	1.6	19.60/4455	22.5
3358T-3330	33	10.1	58.0	7.0	68.0	72.0	90°	18	10	38	1.6	19.60/4455	22.5
3358T-53871	33	10.1	58.0	7.0	68.0	70.8	75°	18	10	43	1.6	19.60/4455	22.5
3358T-6365	33	10.1	58.0	7.0	68.2	72.0	75°	18	10	43	1.6	19.60/4455	22.5
3358T-6365F1	33	12.8	58.0	7.0	68.2	72.0	75°	18	10	43	1.6	19.60/4455	22.5
3358T-6365F2	33	10.1	58.0	7.0	69.4	72.0	70°	18	10	43	1.64.03	19.60/4455	22.5

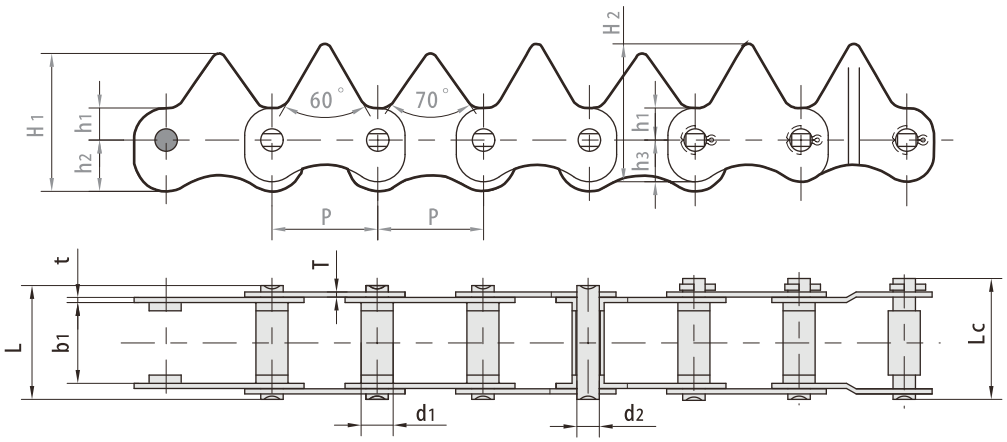

RBL chain number	Pitch	Roller diameter	Width between inner plates	Pin diameter	Pin length		plate dimension					Plate thickness	Tensile strength	Average Tensile strength
	P mm	d1 max mm	b1 min mm	d2 max mm	L max mm	Lc max mm	h1 mm	h2 mm	H1 mm	h3 mm	H2 mm	t/T max mm	Q min mm	Qo kN
3322T-63203	33	10.1	22	7.0	33.0	35.7	10	16	36	13	43	1.6/2.0	19.6/4455	23.0
3330T-66103	33	10.1	30	7.0	40.9	43.7	10	16	36	13	43	1.6/2.0	19.6/4455	23.0

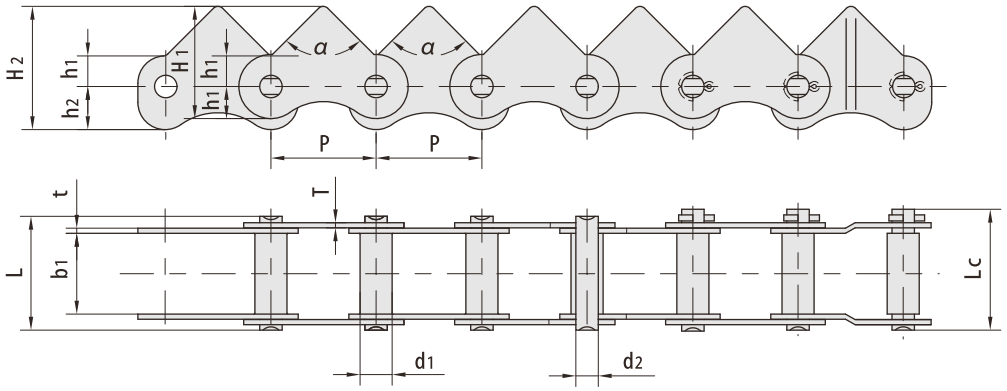

RBL chain number	Pitch	Roller diameter	Width between inner plates	Pin diameter	Pin length		Tooth angle	plate dimension				Plate thickness	Tensile strength	Average Tensile strength
	P mm	d1 max mm	b1 min mm	d2 max mm	L max mm	Lc max mm	a	h1 mm	H1 mm	h2 mm	H2 mm	t/T max mm	Q min mm	Qo kN
3325-1E8350	33	10.1	25	7.0	34.2	37.8	90'	10	35	13	38	1.6/1.2	19.6/4455	22.0
3325-1E6110	33	10.1	25	7.0	34.2	37.0	70°	10	35	13	38	1.6/1.2	19.6/4455	22.0

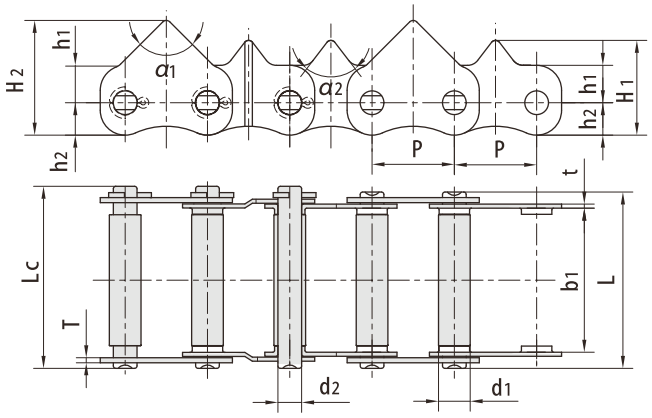

RBL chain number	Pitch	Roller diameter	Width between inner plates	Pin diameter	Pin length		Tooth angle	plate dimension				Plate thickness	Tensile strength	Average Tensile strength
	P mm	d1 max mm	b1 min mm	d2 max mm	L max mm	Lc max mm	a1 / a2	h1 mm	H1 mm	h2 mm	H2 mm	t/T max mm	Q min mm	Qo kN
3358T—5K151	33	12.8	58	9.5	69.7	72.7	90° 775°	15	13	38	46	1.64.03	19.624460	22.5
3358T-3653	33	12.8	58	9.5	69.7	72.7	90° 40°	16	12	38	48	1.64.03	19.60/4455	22.5
3358T-762	33	12.8	58	9.5	69.7	72.9	90° 775°	15	13	38	46	1.64.03	19.604455	22.5

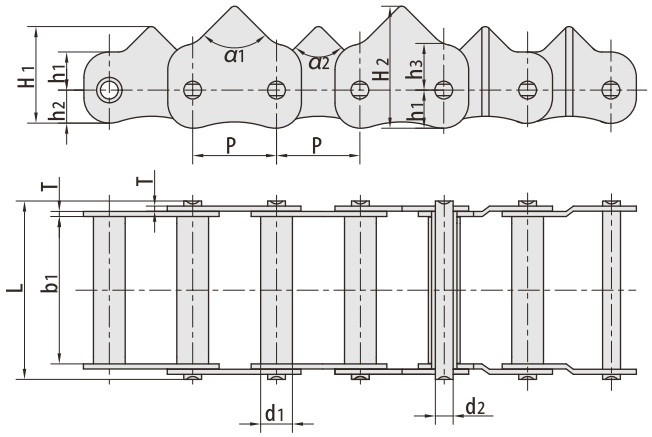

RBL chain number	Pitch	Roller diameter	Width between inner plates	Pin diameter	Pin length.	Tooth angle	plate dimension					Plate thickness	Tensile strength	Average Tensile strength
	P mm	d1 max mm	b1 min mm	d2 max mm	L max mm	a1 / a2	h1 mm	h2 mm	h3 mm	H1 mm	H2 mm	t/T max mm	Q min mm	Qo kN
3558-48180	35	12.8	58	7	70.50	90° 40°	15	13	18	38	48	2.03	27.444236	28.5
3358-74211	33	12.8	58	7	70.70	90° 45°	15	13	-	38	46	2.03	19.62/4460	22.5
3358-48000	35	12.8	58	7	70.35	70° 40°	15	13	15	38	50	2.03	27.44/6236	28.5
3358-48180	33	12.8	58	7	70.50	90° 40°	15	13	18	38	48	2.03	27.44/6236	28.5
3358-48180F2	35	12.8	58	7	70.35	90° 40°	15	13	18	38	48	2.03	27.44/6236	28.5

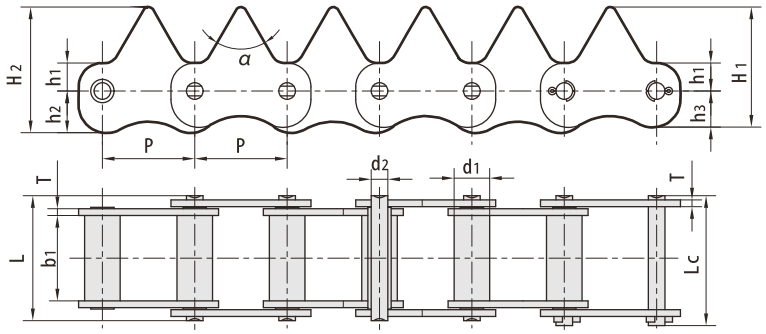

RBL chain number	Pitch	Roller diameter	Width between inner plates	Pin diameter	Pin length		Tooth angle	plate dimension					Plate thickness	Tensile strength	Average Tensile strength
	P	d1 max	b1 min	d2 max	L max	Lc max	a	h1	h2	h3	H1	H2	t/T max	Q min	Qo
	mm	mm	mm	mm	mm	mm		mm	mm	mm	mm	mm	mm	mm	kN
3320-66401	33	12.7	20	5.94	34.4	37.6	60°	10	15	13	43	45	2.42	19.60/4455	22.5
3322-1473	33	12.7	22	5.94	36.4	39.0	70°	10	15	13	43	35	2.42	19.60/4455	22.5
3322-1507	33	12.7	22	5.96	36.4	39.0	70°	10	15	13	43	35	2.42	19.60/4455	22.5
3322-66401	33	12.7	22	5.94	36.4	39.5	60°	10	15	13	43	45	2.42	19.60/4455	22.5
3330-1507	33	12.7	30	5.96	44.4	47.0	70°	10	15	13	43	35	2.42	19.60/4455	22.5
3330-1509	33	12.7	30	5.96	44.4	47.0	70°	10	15	13	43	35	2.42	19.60/4455	22.5
3330-66401	33	12.7	30	5.94	44.4	47.6	60°	10	15	13	43	45	2.42	19.61/4457	22.5
3330-66402	33	12.7	30	5.96	44.4	47.0	60°	10	15	13	43	45	2.42	19.60/4455	22.5

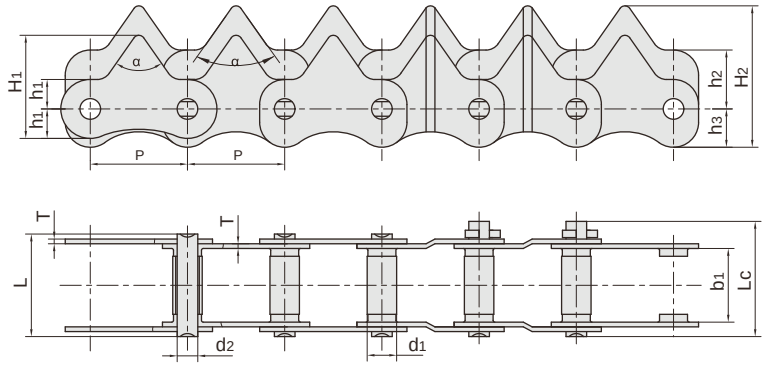

RBL chain number	Pitch	Roller diameter	Width between inner plates	Pin diameter	Pin length		Tooth angle	plate dimension					Plate thickness	Tensile strength	Average Tensile strength
	P	d1 max	b1 min	d2 max	L max	Lc max	a	h1	h2	h3	H1	H2	t/T max	Q min	Qo
	mm	mm	mm	mm	mm	mm		mm	mm	mm	mm	mm	mm	mm	kN
3325T-1E8350	33	10.1	25	7.0	34.5	39	70°	10	20	13	35	48	2.03	19.60/4455	22.5

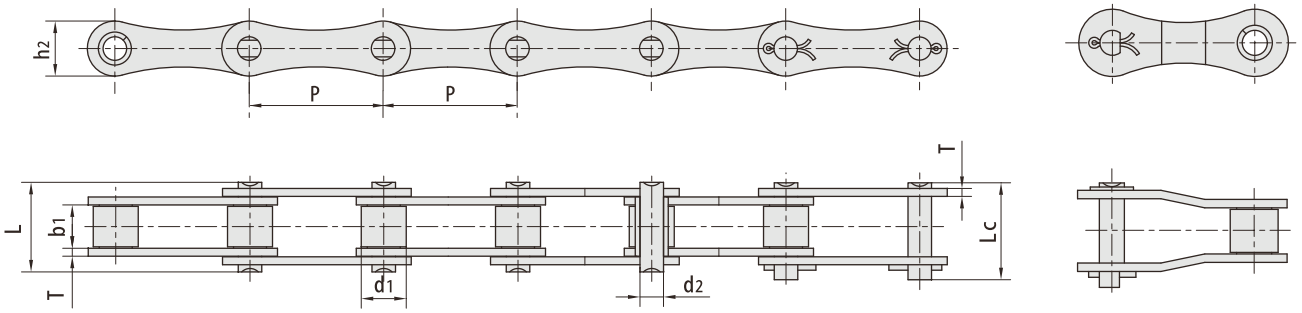

RBL chain number	Pitch	Roller diameter	Width between inner plates	Pin diameter	Pin length		inner plate depth	Plate thickness	Tensile strength	Average Tensile strength	Weight
	P mm	d1 max mm	b1 min mm	d2 max mm	L max mm	Lc max mm	h2 mm	t/T max mm	Q min mm	Qo kN	q kg/m
55V	41.40	17.90	22.23	8.22	39.3	42.4	20.0	3.0	42.00/9546	45.0	2.22
55V F1	41.40	17.90	22.23	8.22	39.3	42.4	21.4	3.0	45.00/10227	73.1	2.32
532	29.21	11.43	15.88	4.45	26.7	28.8	13.2	1.8	8.00/1818	21.6	0.86
532V	29.21	11.43	15.88	5.08	27.3	29.7	13.5	2.1	25.00/5680	27.0	0.96
542	34.93	14.27	19.05	7.00	34.3	37.0	19.8	2.8	27.00/6136	50.8	1.60
S42F2	34.93	14.27	19.05	7.00	34.3	37.0	19.8	2.5/3.0	27.00/6136	50.8	1.82
545	41.40	15.24	22.23	5.72	37.7	40.4	17.3	2.8	18.00/4091	36.1	1.66
S45H	41.40	15.24	22.23	7.14	39.5	42.5	17.3	3.0	37.65/8465	41.4	2.10
551	38.10	15.24	16.00	5.72	30.9	33.8	17.3	2.8	28.00/6364	30.8	1.48
552	38.10	15.24	22.23	5.72	37.7	40.4	17.3	2.8	18.00/4091	36.1	1.68
S52F10	38.10	14.00	22.00	6.92	36.5	39.1	18.2	2.5	23.50/5283	28.2	1.60
S52L	38.10	15.24	16.40	5.72	30.9	33.8	16.5	2.5	29.20/6636	32.2	1.36
S52LV	38.10	15.88	17.80	6.94	33.8	37.0	16.7	3.0	30.00/6818	32.5	1.58
555	41.40	17.78	22.23	5.72	37.7	40.4	17.3	2.8	18.00/4091	36.1	1.80
S55R	41.40	17.78	22.23	8.90	41.0	44.0	22.4	3.5	45.00/10227	73.1	2.49
S55RH	41.40	17.78	22.23	8.90	43.2	46.4	22.4	4.0	65.00/14772	84.5	2.74
S55RHF1	41.40	25.00	22.23	8.90	43.2	46.4	22.4	4.0	65.00/14772	84.5	2.74
562	41.91	19.05	26.20	5.72	40.3	43.0	17.3	2.5	26.70/6067	36.1	1.87
S62F10	41.91	19.05	25.40	5.72	39.4	42.2	17.3	2.5	26.70/6067	36.1	2.04
S62F5	41.91	19.05	26.20	5.72	40.3	43.0	16.7	2.5	26.70/6067	36.1	2.07
S62F8	41.91	19.05	27.90	10.00	44.9	49.3	25.0	3.0	45.00/10227	60.0	2.96
S62R	41.91	19.05	25.80	8.50	41.9	44.6	20.1	2.8	42.00/9546	45.0	2.43
577	58.34	18.26	22.23	8.90	43.2	46.4	26.2	4.0	45.00/10227	73.1	2.66
588	66.27	22.86	28.58	8.90	49.8	53.0	26.2	4.0	45.00/10227	73.1	3.25

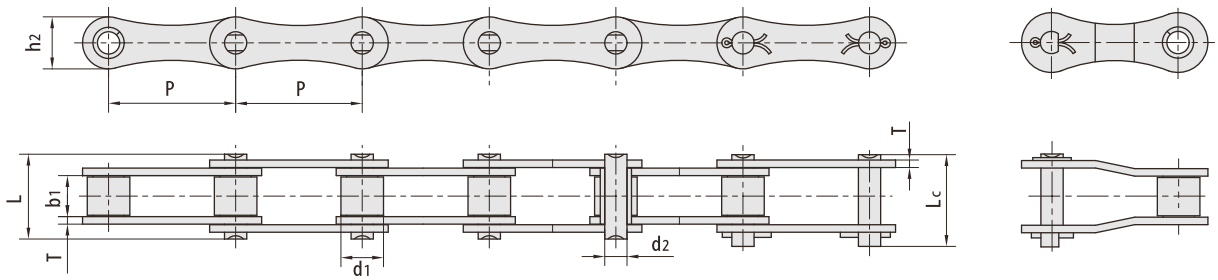

RBL chain number	Pitch	Roller diameter	Width between inner plates	Pin diameter	Pin length		Plate dimension		Tensile strength	Average Tensile strength	Weight
	P mm	d1 max mm	b1 min mm	d2 max mm	L max mm	Lc max mm	h2 max mm	T max mm	Q min mm	Qo kN	q kg/m
A550	41.40	16.87	19.81	7.19	35.0	38.0	19.3	2.80	39.10/8886	51.2	1.79
A555	41.40	16.87	12.70	7.19	29.1	32.0	19.3	3.10	39.10/6886	56.0	1.60
A557	41.40	17.78	20.24	8.00	37.4	40.6	23.1	3.10	55.61/12639	74.3	2.45
A620	42.01	17.91	24.51	7.19	41.8	45.2	20.2	3.25	39.10/8886	55.1	2.18

CA type steel agricultural chains

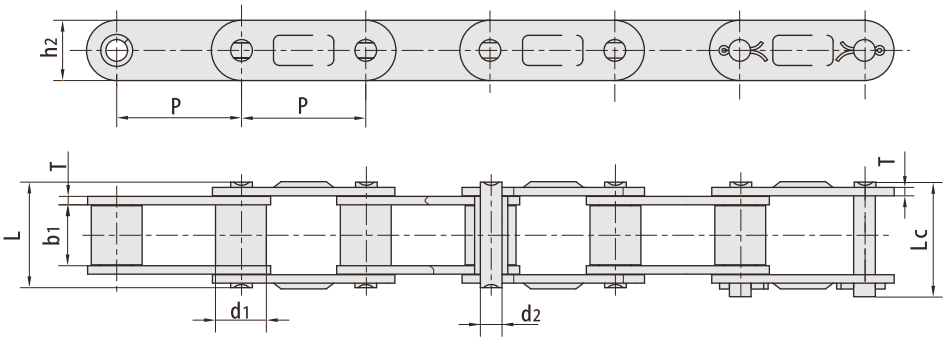

RBL chain number	Pitch	Roller diameter	Width between inner plates	Pin diameter	Pin length		Plate dimension		Tensile strength	Average Tensile strength	Weight
	P mm	d1 max mm	b1 min mm	d2 max mm	L max mm	Lc max mm	h2 max mm	T max mm	Q min mm	Qo kN	q kg/m
CA627	30.00	15.88	19.05	8.28	36.1	39.4	20.5	3.0	50.00/11247	55.0	2.51
CA550D	41.40	16.87	19.81	7.19	35.0	38.0	19.3	2.80	39.10/6886	51.2	1.94
CA555D	41.40	16.87	12.70	7.19	29.1	32.0	19.3	3.10	39.10/6886	56.0	1.72
CA557D	41.40	17.78	20.24	8.00	37.4	40.6	23.1	3.10	55.61/12639	74.3	2.60
CA620D	42.01	17.91	24.51	7.19	41.8	45.2	20.2	3.25	39.10/8886	55.1	2.35
CA2062H	38.10	22.23	12.57	5.94	29.2	31.6	18.0	3.25	31.10/6992	35.0	2.30
CA627F1	30.00	15.88	19.60	8.28	36.1	39.7	20.5	3.00	50.00/11241	55.0	2.55

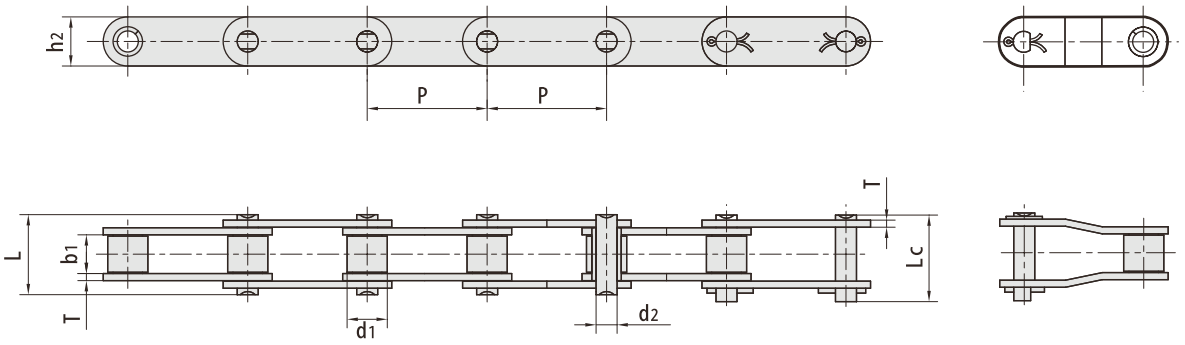

RBL chain number	Pitch	Roller diameter	Width between inner plates	Pin diameter	Pin length		Plate dimension		Tensile strength	Average Tensile strength	Weight
	P mm	d1 max mm	b1 min mm	d2 max mm	L max mm	Lc max mm	h2 max mm	T max mm	Q min mm	Qo kN	q kg/m
38.4R	38.400	15.88	19.05	6.92	33.8	36.4	17.30	2.50	33.00/7480	41.2	1.70
38.4V	38.400	15.88	18.00	6.92	35.0	38.0	17.30	3.00	40.00/9091	50.0	1.83
38.4V B	38.400	15.88	19.05	8.28	36.1	39.4	20.50	3.00	50.00/11363	62.5	2.17
55 V D	41.400	17.90	23.00	8.22	39.3	42.4	20.00	2.80	42.00/9546	45.0	2.34
CA2060H	38.100	11.91	12.70	5.94	29.2	31.6	18.00	3.25	31.10/6996	40.5	1.45
CA550	41.400	16.87	19.81	7.19	35.0	38.0	19.30	2.80	39.10/8886	51.2	1.94
CA550(U)	41.400	16.86	19.80	7.19	35.5	28.3	19.50	2.80	48.91/10996	53.8	1.98
CA550F4	41.400	14.35	20.24	7.14	35.0	38.5	19.05	2.80	50.00/11363	52.0	1.76
CA550F5	41.400	16.66	20.24	7.14	35.0	38.5	19.05	2.80	45.00/10227	52.0	1.97
CA550H	41.400	16.74	20.00	7.14	36.0	39.1	19.10	3.00	57.82/13000	60.8	2.00
C A 550V	41.400	16.80	19.05	8.28	36.1	39.1	22.00	3.00	55.00/12499	68.7	2.24
CA550VF2	41.400	16.80	19.05	8.28	36.1	38.8	20.00	3.00	55.00/12499	68.7	2.13
CA555	41.400	16.87	12.70	7.19	29.1	32.0	19.30	3.10	39.10/8886	56.0	1.72
CA557	41.400	17.78	20.24	8.00	37.4	40.6	23.10	3.10	55.61/12639	74.3	2.60
C A557(U)	41.400	17.78	19.50	8.00	37.5	40.6	23.30	3.10	64.5/14501	71.0	2.55
CA620	42.010	17.91	24.51	7.19	41.8	45.2	20.20	3.25	39.10/8886	55.1	2.35
CA960	41.400	17.78	22.61	8.90	40.1	43.0	23.10	3.00	66.00/15160	72.6	6.94
CAE44151	28.575	15.88	16.20	7.92	33.5	36.9	22.20	3.25	58.80/13363	64.5	2.73
S62F3	41.910	19.05	25.40	8.00	42.0	44.6	26.00	3.00	47.00/10796	58.7	3.12

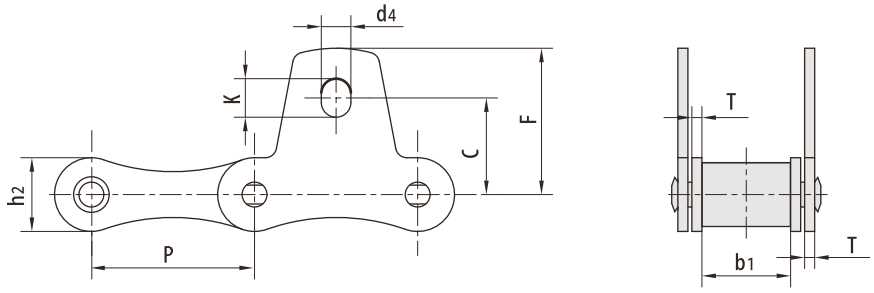

RBL chain number	P mm	b1 mm	h2 mm	T mm	C mm	F mm	d4 mm	K mm
S32SK1	29.21	15.88	13.2	1.8	17.3	26.20	5.3	6.9
S42SK1	34.93	19.05	19.8	2.8	23.6	34.30	8.3	11.5
S42SK1F1	34.93	19.05	19.8	2.8	22.9	33.33	8.3	11.5
S45SK1	41.40	22.23	17.3	2.8	19.8	30.20	8.3	11.5
S52SK1	38.10	22.23	17.3	2.8	22.1	31.80	8.3	9.9
S55SK1	41.40	22.23	17.3	2.8	19.8	30.20	8.3	11.5
S62SK1	41.91	26.20	17.3	2.5	24.6	38.60	8.3	14.7
S77SK1	58.34	22.23	26.2	4.0	36.3	50.00	8.3	11.5
S88SK1	66.27	28.58	26.2	4.0	43.7	55.60	8.3	9.9
S32SK1F1	29.21	15.88	13.2	1.8	16.7	25.68	6.5	8.1
S55RHSK1	41.40	22.23	22.4	4.0	19.8	30.20	8.3	11.5

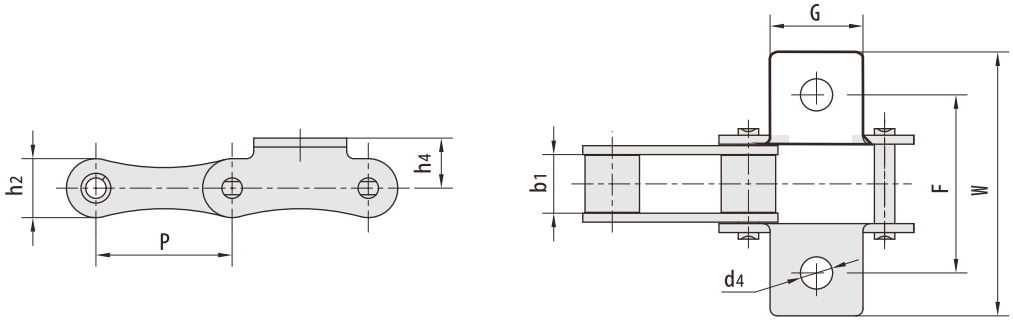

RBL chain number	P mm	b1 mm	G mm	F mm	W mm	h4 mm	d4 mm	h2 mm
S52LK1	38.10	16.40	26.0	50.0	74.0	14.0	9.0	16.5
55VK1	41.40	22.23	30.0	58.0	76.0	16.0	9.0	20.0
S42F2K1F1	34.93	19.05	45.0	54.8	75.2	14.0	8.3	19.8
S52LF1K1	38.10	16.00	26.0	50.0	74.0	16.0	9.0	16.5
55VDK1	41.40	23.00	30.0	58.0	76.0	16.0	9.0	20.0

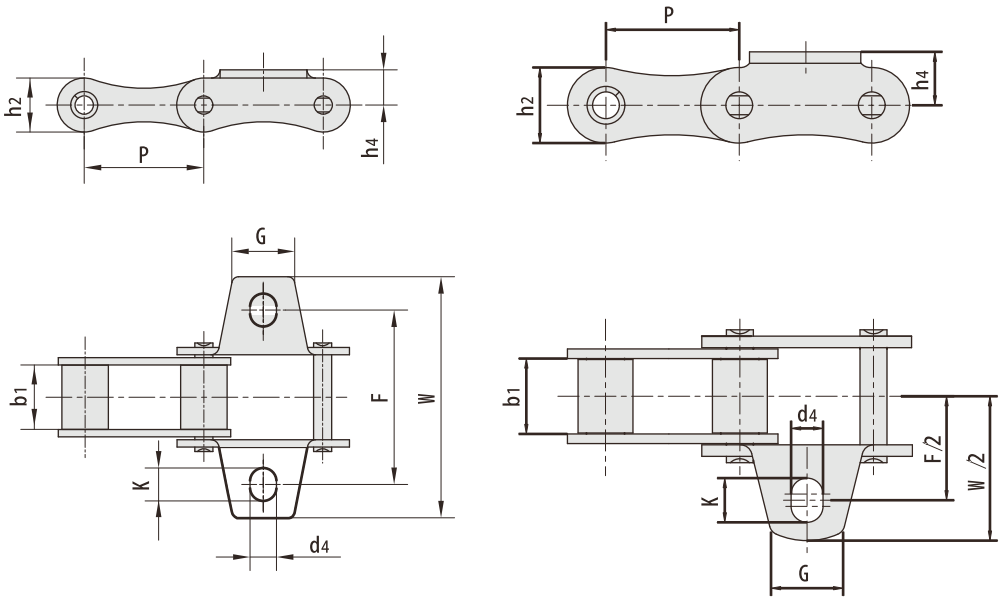

RBL chain number	P mm	b1 mm	G mm	F mm	W mm	h4 mm	d4 mm	K mm	K2 mm
S32K1	29.21	15.88	15.0	42.9	61.0	8.6	5.3	6.9	13.2
S32K1F1	29.21	15.88	15.0	42.9	61.0	8.6	6.5	8.1	13.2
S32K1F3	29.21	15.88	17.0	42.9	49.0	8.6	5.0	6.5	13.2
S32VK1	29.21	15.88	15.0	43.0	61.0	8.6	6.5	8.0	13.5
S42K1	34.93	19.05	17.5	54.0	74.9	14.0	8.3	11.5	19.8
S45K1	41.40	22.23	22.0	54.0	75.0	11.4	8.5	11.7	17.3
S51K1	38.10	16.00	19.0	49.8	71.5	11.4	8.3	9.9	17.3
S52K1	38.10	22.23	19.0	58.8	78.0	11.4	8.3	9.9	17.3
S52K1F1	38.10	22.23	19.0	58.8	78.0	11.4	6.6	8.2	17.3
S55K1	41.40	22.23	22.0	54.0	75.0	11.4	8.5	11.7	17.3
S55K1F1	41.40	22.23	22.0	54.0	75.0	11.4	6.5	9.5	17.3
S55HK1	41.40	22.23	34.0	52.7	82.0	13.4	8.4	11.4	20.4
S55H (T)K1	41.40	22.23	34.0	51.2	81.4	13.4	8.4	11.4	20.4
S55HF5	41.40	22.23	38.0	57.0	95.0	14.0	8.5	11.2	22.0
S55RK1F1	41.40	22.23	25.0	63.6	90.4	16.0	8.6	12.0	22.4
S62K1	41.91	26.20	22.0	66.8	95.4	11.4	8.3	14.7	17.3
S62A2K1	41.91	26.20	22.0	66.7	95.5	12.6	8.3	14.7	17.3
S62F2K1	41.91	26.20	22.0	66.8	95.4	11.4	6.5	13.0	17.3
S62F5A2K1	41.91	26.20	22.0	66.7	95.5	12.6	8.3	14.7	16.7
S77K1	58.34	22.23	25.0	76.2	102.0	20.8	8.3	11.5	26.2
S88K1	66.27	28.58	22.0	97.0	119.4	20.8	8.3	9.9	26.2
S51HF1K1	38.10	16.00	34.0	52.4	84.5	13.0	8.3	9.9	21.0
S88F2K1	66.27	28.58	22.0	97.0	119.4	20.8	8.3	9.9	26.2
S42A1F2	34.93	19.05	23.6	54.0	75.0	14.0	6.9	10.1	19.8
S42F2A1	34.93	19.05	17.5	54.0	75.0	14.0	8.3	11.5	19.8
S88F3K1	66.27	28.58	30.0	97.7	120.0	20.5	8.3	9.9	26.2
S62F12K1	41.91	25.40	22.0	65.9	94.7	12.6	8.3	14.7	16.7

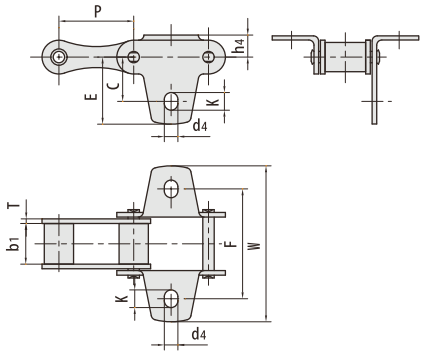

RBL chain number	P mm	b1 mm	T mm	C mm	E mm	F mm	W mm	d4 mm	K mm	h4 mm
S32F1	41.4	29.21	1.8	17.3	26.2	42.9	60	5.3	6.9	8.6

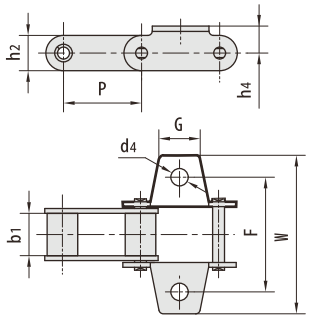

RBL chain number	P mm	b1 mm	G mm	F mm	W mm	h4 mm	d4 mm	h2 mm
S52F1	38.4	18.50	23.0	57.5	80.0	16.0	8.7	17.5
S55VK1F2	41.4	22.23	22.0	54.0	72.0	15.0	8.7	20.0
S52F13K1	38.1	19.00	17.0	57.0	81.0	15.4	9.1	17.3

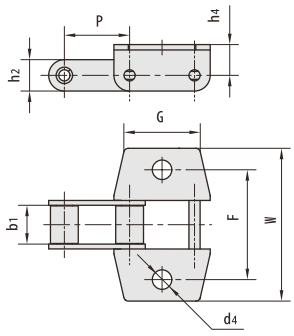

RBL chain number	P mm	b1 mm	G mm	F mm	W mm	h4 mm	d4 mm	h2 mm
S52F2	38.4	18.50	39.0	57.0	80.0	16.0	10.5	17.5
S52F7	38.4	19.05	39.0	58.4	82.4	14.5	10.5	20.5
S52F12	38.1	19.05	39.0	57.5	79.5	14.5	10.0	14.5

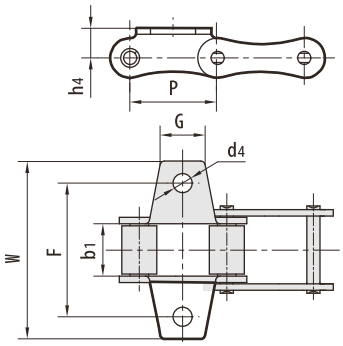

RBL chain number	P mm	b1 mm	G mm	F mm	W mm	h4 mm	d4 mm
S52F6	38.10	22.23	19.0	51.2	71.7	16.5	8.3
55VK1F2	41.40	22.23	20.0	71.0	93.8	16.0	8.4
55VK1F3	41.40	22.23	22.0	54.0	72.0	15.0	8.7
S62K1F1	41.91	26.20	26.0	63.0	92.0	11.4	7.0
S62K1F2	41.91	26.20	22.0	66.8	95.4	10.5	8.5

RBL chain number	P mm	b1 mm	G mm	F mm	W mm	h4 mm	d4 mm	K mm
S55RK1	41.4	22.23	25.0	63.6	90.4	15.5	8.6	12.0
S55RHK1	41.4	22.23	25.0	63.6	90.4	15.5	8.6	12.0
CA645K1	41.4	22.23	25.0	58.0	83.0	18.5	8.5	12.0
S55RHF2K1	41.4	22.23	24.0	63.4	84.6	16.0	8.5	12.0
S55RHF3K1	41.4	22.23	24.0	63.4	84.6	16.0	8.5	12.0

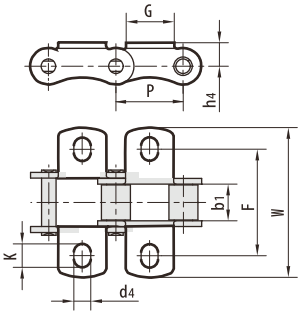

RBL chain number	P mm	b1 mm	G mm	F mm	W mm	h4 mm	d4 mm	h2 mm
S32K1F2	29.21	15.88	15.0	42.9	61.0	8.6	5.3	13.2
S52K1F3	38.10	22.23	22.0	58.7	76.5	11.4	8.5	17.3
S45K1F1	41.40	22.23	22.0	51.0	75.0	11.4	7.2	17.3
S45K1F2	41.40	22.23	22.0	56.0	75.0	11.4	10.0	17.3
55VK1F2	41.40	22.23	22.0	56.0	75.0	11.4	10.0	17.3
55VK1F1	41.40	22.23	22.0	56.0	75.0	16.0	10.0	20.0
S55F5	41.40	22.23	22.0	56.0	75.0	11.4	10.0	17.3
S77K1F1	58.34	22.23	26.0	76.2	103.8	20.8	10.5	26.2

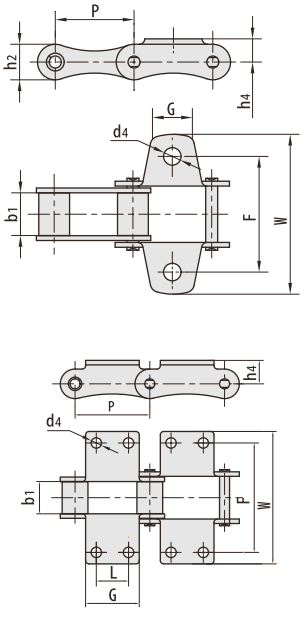

RBL chain number	P mm	b1 mm	L mm	G mm	F mm	W mm	h4 mm	d4 mm
S88K2F1	66.27	28.58	28.6	47.6	97.0	117.4	20.8	9.2
S62K2F1	41.91	26.20	19.1	35.0	66.8	95.4	11.4	8.3

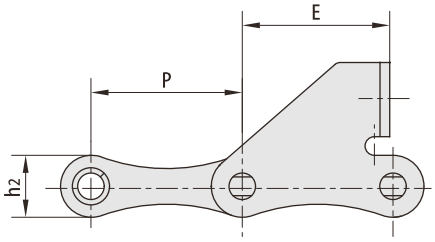

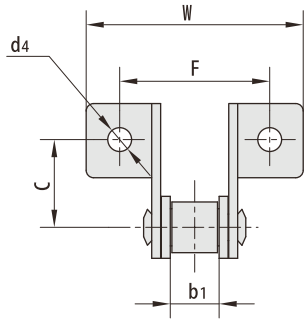

RBL chain number	P mm	b1 mm	C mm	E mm	F mm	W mm	d4 mm	h2 mm
55VSDF1	41.40	22.23	20.50	33.2	62.0	85.6	6.6	20.0
55VSDF2	41.40	22.23	20.50	33.2	62.0	85.6	8.3	20.0
55VSDF3	41.40	22.23	24.00	27.0	58.0	78.0	6.5	20.0
55VSDF4	41.40	22.23	23.40	28.5	57.5	83.4	6.5	20.0
S32SD	29.21	15.88	20.00	19.2	58.0	78.0	6.4	13.2
S45F1	41.40	22.23	21.00	25.0	62.4	83.4	8.5	17.3
S45HF3	41.40	22.23	17.50	33.5	61.3	89.9	8.4	17.3
S45SD	41.40	22.23	17.00	28.6	58.0	81.2	8.5	17.3
S45SDF2	41.40	22.23	21.00	28.5	62.4	83.4	8.5	17.3
S45B -F1	41.40	22.23	20.00	37.0	58.0	87.0	6.6	17.3
S45W -F4	41.40	22.23	20.50	33.2	58.0	85.6	6.6	17.3
S51SDF1	38.10	16.00	19.65	20.0	56.0	82.0	6.4	17.3
S52F12SD	38.10	13.00	20.00	30.0	47.5	83.4	6.4	17.3
S52F4	38.10	15.80	20.60	37.0	53.8	69.5	6.4	16.7
S52F8	38.10	22.23	20.60	37.0	60.7	76.4	6.4	17.3
S52F9	38.10	18.50	20.00	18.5	54.5	71.0	6.5	16.5
S52LF1SD	38.10	22.02	20.00	17.5	54.5	71.0	6.5	16.5
S52LF2SD	38.10	16.00	20.00	19.0	54.6	76.6	6.5	17.0
S52LSD	38.10	16.40	20.00	17.5	54.5	71.0	6.5	16.5
S52LVSD	38.10	17.80	20.00	19.2	62.0	85.5	6.4	16.7
S52LVSDF1	38.10	17.80	20.00	19.2	54.5	71.0	7.0	16.7
S52SD	38.10	22.23	20.00	19.2	62.0	88.5	6.4	17.3
S52SDF1	38.10	15.80	19.56	20.0	56.0	82.0	6.4	17.3
S52SDF2	38.10	22.20	20.20	37.2	57.6	86.2	6.5	16.4
S55F2	41.40	22.23	20.00	37.0	58.0	87.0	6.4	17.3
S55F3	41.40	22.23	20.50	33.2	58.0	85.6	6.6	17.3
S55F4	41.40	22.23	20.00	37.0	58.0	87.0	6.6	17.3
S55F6	41.40	22.23	20.00	30.0	58.0	87.0	6.4	17.3
S55F7	41.40	22.23	20.50	33.2	62.0	85.6	6.6	17.3
S55RSDF1	41.40	22.23	20.50	33.2	62.0	85.6	6.6	22.4
S55SDF2	41.40	22.23	20.00	33.4	58.0	86.0	6.6	17.3
S55SDF4	41.40	22.23	25.00	36.0	58.0	85.0	6.5	17.3
S55SDF6	41.40	22.23	20.00	37.0	58.0	87.0	8.5	17.3
S62SD	41.91	26.20	20.00	32.6	61.4	92.0	6.4	17.3

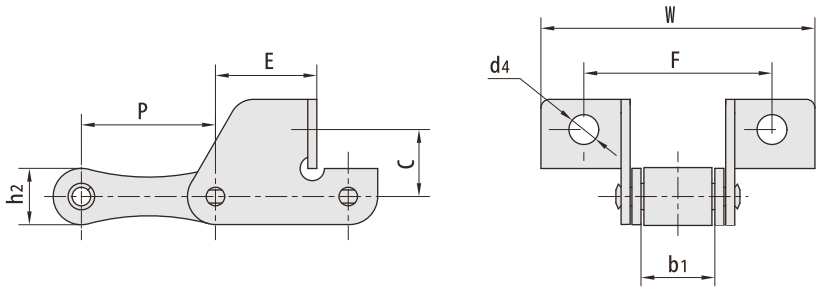

RBL chain number	P mm	b1 mm	C mm	E mm	F mm	W mm	d4 mm	h2 mm
S45HSDF3	41.4	22.23	17.5	31.1	63.5	84.0	8.3	17.3
S45SDF1	41.4	22.23	17.5	31.9	62.0	91.0	8.5	17.3
S45SDF3	41.4	22.23	16.5	31.9	62.0	91.0	8.5	17.3
S45V	41.4	22.23	21.0	28.5	62.4	83.4	8.8	17.3
S55F12SD	41.4	22.23	20.0	30.0	61.6	94.7	6.5	17.3
S55HSDF3	41.4	22.23	20.6	32.5	64.0	91.0	8.5	20.4
S55SDF1	41.4	22.23	20.0	31.9	58.0	89.2	6.5	17.3
S55V	41.4	22.23	21.0	28.5	57.5	83.4	6.5	17.3

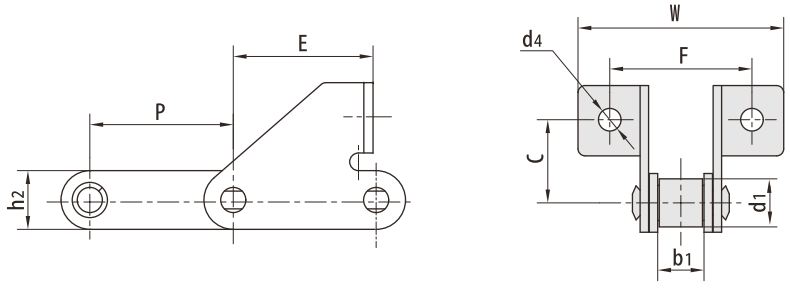

RBL chain number	P mm	d1 mm	b1 mm	C mm	E mm	F mm	W mm	d4 mm	h2 mm
S52F11SD	38.1	16.00	17.50	21.0	23.0	55.0	75.0	8.3	20.0
S52F3	38.4	15.88	18.50	24.0	37.4	52.0	73.0	8.7	17.5
C45F1SD	41.4	15.24	22.23	19.7	41.7	58.0	90.0	6.6	17.3

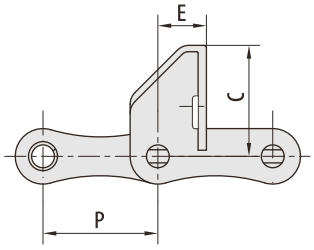

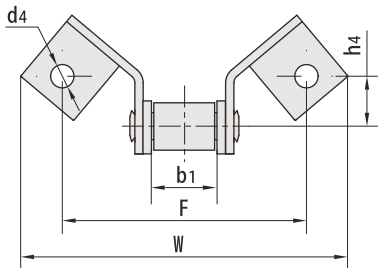

RBL chain number	P mm	b1 mm	C mm	E mm	F mm	W mm	h4 mm	d4 mm
55VSE	41.4	22.23	41.0	17.5	88	118	18.44	8.4
55VSEL	41.4	22.23	41.0	31.3	88	118	18.44	8.4
55VSEF1	41.4	22.23	40.0	25.0	88	118	18.00	8.4
CA645SE	41.4	22.23	40.0	17.5	88	118	18.00	8.4

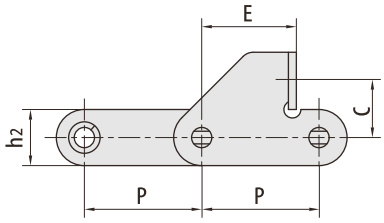

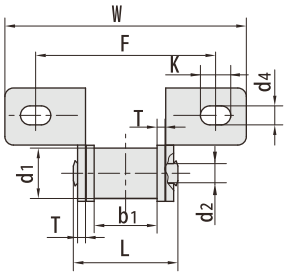

RBL chain number	P mm	C mm	E mm	F mm	W mm	d4 mm	K mm
S55F9SD	41.4	20.5	33.4	62.0	85.4	6.7	10.7
S55HSDF2	41.4	20.6	32.5	64.0	91.0	7.5	10.7
55VF1SDF1	41.4	18.8	26.7	65.5	90.0	8.5	10.0

RBL chain number	Pitch P mm	Roller diameter d1 max mm	Width between inner plates b1 min mm	Pin diameter d2 max mm	Pin length L max mm	Plate dimension h2 max mm	Plate dimension T mm	Tensile strength Q min kN/LBF	Average Tensile strength Q 0 kg/m
S55F9SD	41.4	17.78	22.20	7.14	37.0	19.8	2.8	35.0/7873	2.7
S55HSDF2	41.4	15.20	22.23	8.28	39.5	20.4	3.0	45.0/10116	2.6
55VF1SDF1	41.4	17.90	22.23	8.22	39.3	21.4	3.0	45.0/10116	2.9

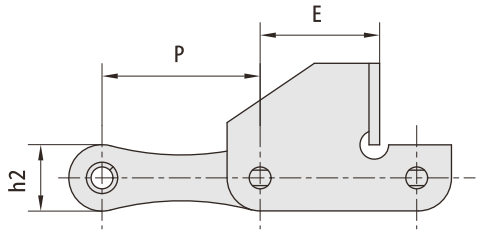

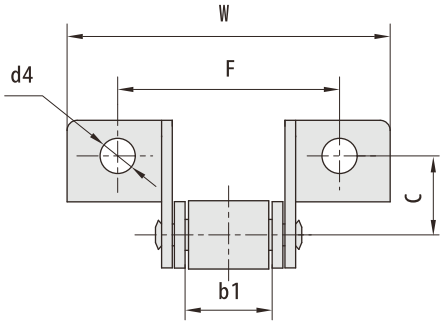

RBL chain number	P mm	b1 mm	C mm	E mm	F mm	W mm	d4 mm	h2 mm
CA2060F1SD	38.1	12.70	21.0	29.7	47.6	82.5	6.4	17.3
S55F10SD	41.4	22.23	20.0	30.0	57.0	90.1	6.5	17.3
S55H(DSDF3	41.4	22.23	20.6	31.6	63.5	90.5	8.5	20.4
S55HSDF1	41.4	22.23	20.6	41.8	64.0	91.0	8.4	20.4
S55RHSDF	41.4	22.23	25.4	31.5	71.0	101.0	7.0	22.4
S55RHSDF1	41.4	22.23	25.4	31.5	71.0	101.0	8.5	22.4
S55RSD	41.4	22.23	19.0	31.9	62.0	89.2	8.3	22.4
S55SDF3	41.4	22.23	17.2	31.9	62.0	92.0	8.3	17.3

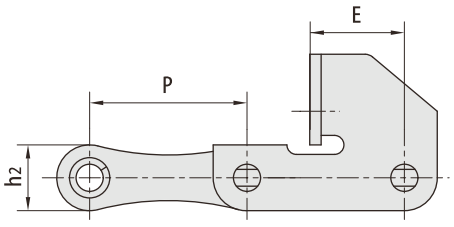

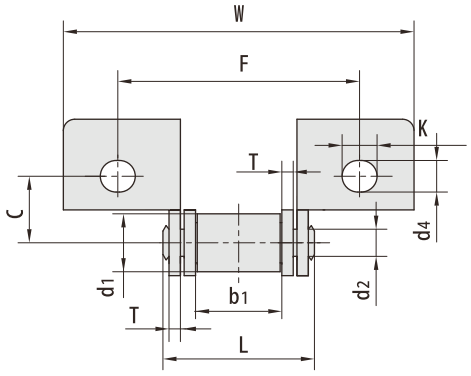

RBL chain number	Pitch P mm	Roller diameter d1 max mm	Width between inner plates b1 min mm	Pin diameter d2 max mm	Pin length L max mm	Plate dimension h2 max mm	Plate dimension T mm	Atlachment dinension C mm	Atlachment dinension E mm	Atlachment dinension F mm	Atlachment dinension W mm	Atlachment dinension d4 mm	Atlachment dinension K mm	Tensile strength Q min kN/LBF	Average Tensile strength Q 0 kg/m
S45HF1	41.4	15.24	22.23	7.14	39.5	17.3	3.0	17.5	24.9	63.4	92.0	8.3	9.2	36.75/8267	2.00
S45HSDF1	41.4	15.24	22.23	7.14	39.5	17.3	3.0	17.5	31.1	63.5	84.0	8.3	9.2	36.75/8267	2.60
S55H (DSD	41.4	17.78	22.23	8.28	39.5	20.4	3.0	20.6	32.5	63.5	90.5	7.5	10.7	45.00/10122	2.45
S55HSD	41.4	17.78	22.23	8.28	39.5	20.4	3.0	20.6	32.5	64.0	91.0	7.5	10.7	45.00/10122	2.90

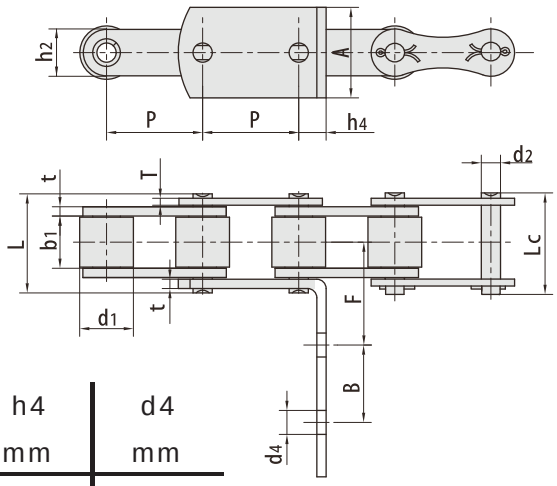

RBL chain number	P mm	A mm	B mm	F mm	h4 mm	d4 mm
S55HF2	41.4	39.0	so	61.0	11.8	8.3
S55HF1	41.4	30.0	30	32.0	13.5	6.5

RBL chain number	Pitch	Roller diameter	Width between inner plates	Pin diameter	Pin length		Plate dimension		Tensile strength	Average Tensile strength
	P mm	d1 max mm	b1 min mm	d2 max mm	L max mm	Lc max mm	h2 max mm	T mm	Q min kN/LBF	Q 0 kg/m
S55HF2	41.4	23.00	22.23	8.28	42.0	45.5	20.0	4.0/3.0	47.5/10685	4.27
S55HF1	41.4	17.78	22.23	8.28	39.5	42.8	20.4	3.0	45.0/10122	2.90

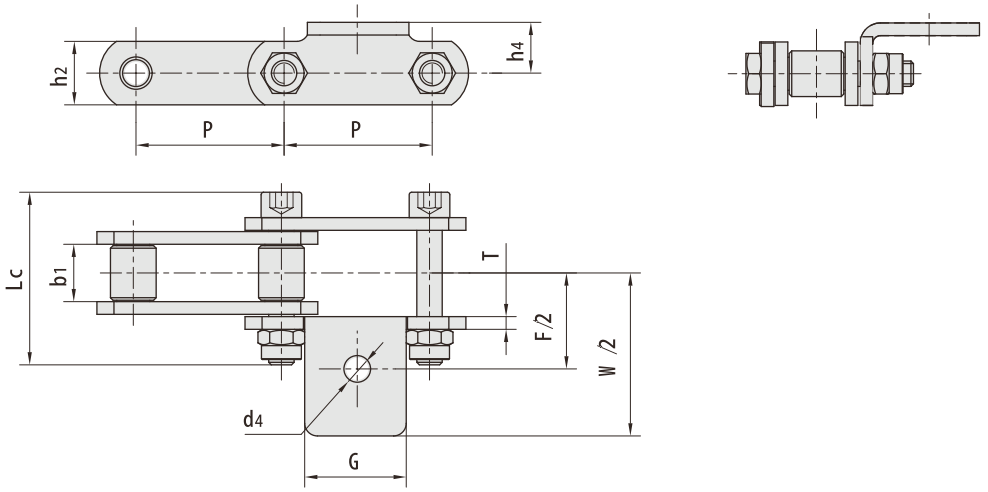

RBL chain number	P mm	b1 mm	G mm	F mm	W mm	h4 mm	d4 mm	h2 mm	Lc mm	T mm
S77A1F2	58.34	22.23	40.0	75.0	126.0	21.0	10.5	30.0	67.0	5.0
S77A1F3	58.34	22.23	40.0	79.0	132.0	21.0	10.5	30.0	71.0	6.0
S77F1A1	58.34	22.23	40.0	77.0	128.0	20.0	10.5	25.0	68.0	5.0
S77F2A1	58.34	22.23	40.0	77.0	132.0	25.0	10.5	30.0	72.0	6.0

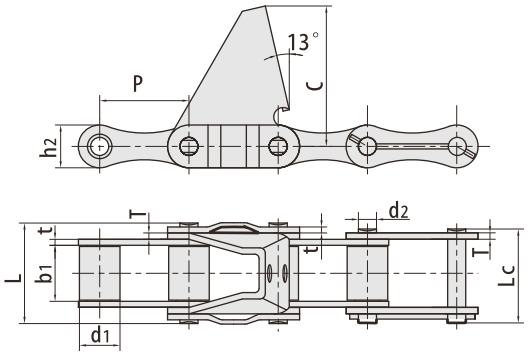

RBL chain number	Pitch	Roller diameter	Width between inner plates	Pin diameter	Pin length		Plate dimension			Tensile strength	Average Tensile strength
	P mm	d1 max mm	b1 min mm	d2 max mm	L max mm	Lc max mm	h2 max mm	t/T mm	C mm	Q min kN/LBF	Q 0 kg/m
S62R-C6E	41.91	19.05	25.8	8.5	47.8	44.6	20.1	2.8/3.0	66.0	42.0/9448	43.7

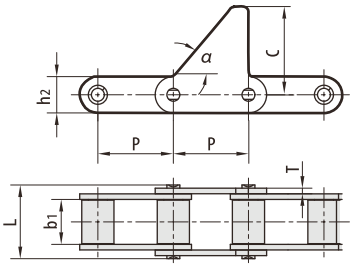

RBL chain number	P mm	b1 mm	C mm	a mm	L mm	T mm	h2 mm
562F1	41.91	25.4	60.0	50°	41.9	3.0	20.0

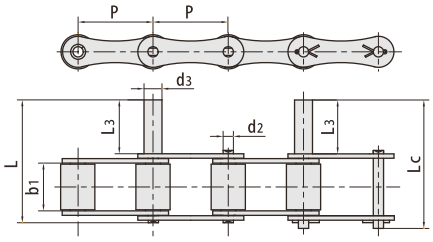

RBL chain number	P mm	b1 mm	d2 mm	d3 mm	L3 mm	L mm	Lc mm
S62-D4	41.91	26.20	5.72	10.00	35	73.8	76.5
S42-D1F1	34.93	19.05	7.00	9.95	25	58.0	61.0
S42-D2	34.93	19.05	7.00	10.00	30	63.0	65.7
S62-D3F1	41.91	26.20	5.72	5.72	18	56.8	59.5

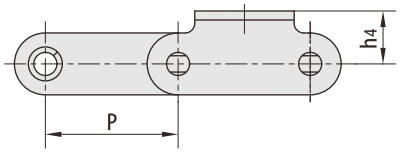

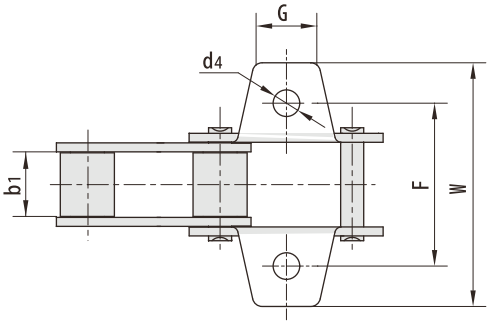

RBL chain number	P mm	b1 mm	G mm	F mm	W mm	h4 mm	d4 mm
38.4RK1F1	38.4	19.05	22.00	58.0	83.00	15.4	9.00
38.4RK1F2	38.4	19.05	22.00	57.5	82.00	16.0	9.00
38.4RK1F3	38.4	19.05	20.00	58.0	84.40	15.5	8.50
38.4RK1F4	38.4	19.05	20.00	57.0	75.00	16.0	8.50
38.4RK1F7	38.4	19.05	22.00	57.5	82.00	16.0	10.50
38.4RK1F8	38.4	19.05	20.30	57.0	78.00	16.0	8.60
38.4RK1F9	38.4	19.05	20.00	57.0	73.00	10.7	6.50
38.4RK1F10	38.4	19.05	20.00	57.0	78.00	16.0	8.50
38.4SHK1	38.4	19.00	20.00	57.0	75.00	16.0	8.60
38.4VF3K1	38.4	18.00	20.00	58.0	79.00	15.4	9.00
38.4V F3K1F2	38.4	18.00	20.00	57.5	79.00	15.4	8.50
38.4V K1	38.4	18.00	22.00	57.5	82.00	15.4	9.00
38.4V K1F6	38.4	18.00	22.00	56.8	74.80	16.3	8.50
38.4V K1F7	38.4	18.00	22.00	57.5	82.00	15.4	8.40
38.4V K1F9	38.4	18.00	22.00	56.8	82.00	16.3	8.70
C55VK1	41.4	22.23	23.00	58.0	75.60	15.0	9.00
C55VK1F1	41.4	22.23	30.00	58.0	76.00	16.0	9.00
CA550A29	41.4	19.81	22.23	50.8	71.40	12.7	9.92
CA550F5AK29M	41.4	20.24	26.20	50.8	75.40	16.5	10.24
CA550AK4F2	41.4	20.24	26.00	54.0	80.60	16.5	10.30
CA550F2	41.4	19.50	22.00	50.8	72.00	14.7	8.50
CA550F4K19	41.4	20.24	22.23	50.8	77.80	12.7	6.75
CA550AK29M	41.4	19.81	26.20	50.8	75.40	16.5	10.24
CA550F5K1	41.4	20.24	22.20	54.0	71.50	12.7	8.50
CA550F5K29F1	41.4	20.24	22.00	50.8	75.40	12.7	10.30
CA550K1F1	41.4	19.81	20.00	54.0	76.20	16.5	8.30
CA550K1F15	41.4	19.81	22.00	50.8	76.20	12.7	8.50
CA550K1F16	41.4	19.81	22.00	53.8	75.00	11.7	8.50
CA550K1F18	41.4	19.81	22.20	53.7	71.10	12.7	9.90

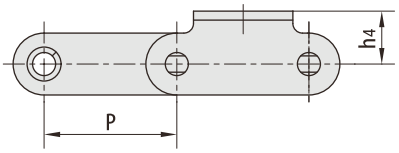

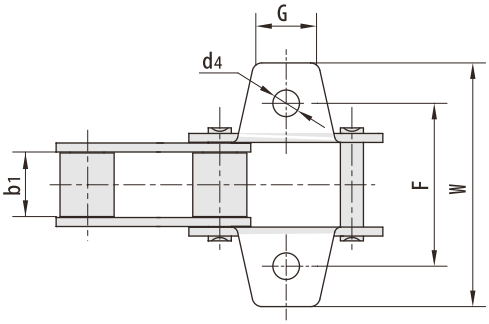

RBL chain number	P mm	b1 mm	G mm	F mm	W mm	h4 mm	d4 mm
CA550K1F2	41.4	19.81	20.00	50.8	76.20	16.5	8.30
CA550K1F7	41.4	19.81	26.20	50.8	75.40	16.5	8.40
CA550K25	41.4	19.81	22.23	50.8	71.40	12.7	8.70
CA550K29F1	41.4	19.81	22.20	50.8	75.40	12.7	10.30
CA550VF2K1	41.4	19.05	27.18	51.0	75.54	16.5	8.33
CA550VK1	41.4	19.05	27.00	54.0	75.54	16.5	8.50
C A550VK1F1	41.4	19.05	27.00	50.8	75.54	16.5	8.50
CA557F7K1	41.4	20.24	25.70	57.2	78.20	16.5	10.50
CA557K1	41.4	20.24	22.00	50.8	72.00	15.9	8.70
CA557K1F2	41.4	20.24	22.00	50.8	72.00	15.9	8.30

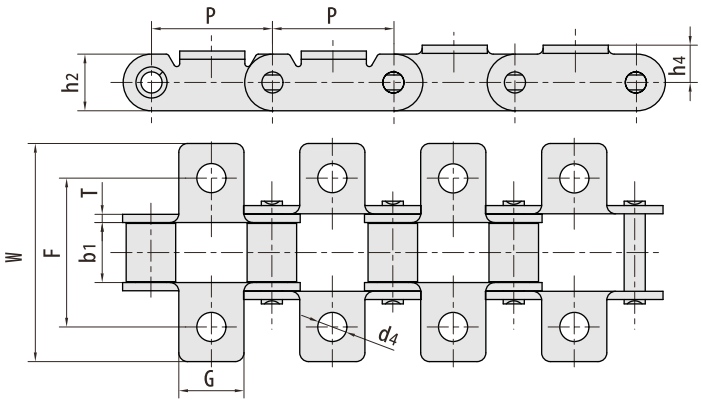

RBL chain number	P mm	b1 mm	G mm	F mm	W mm	h2 mm	h4 mm	T mm	d4 mm
CA550K11	41.40	19.81	22.2	50.8	75.4	19.3	10.7	2.80	9.92
CA550K17	41.40	19.81	22.2	54.0	76.2	19.3	12.7	2.80	6.75
CA550K20	41.40	19.81	22.2	50.8	76.2	19.3	12.7	2.80	6.75
CA550K22	41.40	19.81	22.2	54.0	76.2	19.3	12.7	2.80	9.53
CA550K1F8	41.40	19.81	22.2	50.8	75.4	19.3	10.7	2.80	6.75
CA550K1F17	41.40	19.81	22.2	50.5	67.1	19.3	10.7	2.80	6.75
CA557K1F3	41.40	20.24	38.1	75.5	107.4	23.1	15.9	3.10	10.30
CA620K1F2	42.01	24.51	22.2	62.7	80.2	20.2	11.5	3.25	6.75
CA620K1S	42.01	24.51	22.2	62.7	80.2	20.2	11.5	3.25	8.33

RBL chain number	P mm	b1 mm	G mm	F mm	W mm	h4 mm	d4 mm	K mm
CA550K1	41.4	19.81	22.00	52.5	76.2	12.7	8.3	10.0
CA550K1F3	41.4	19.81	22.00	54.0	76.2	12.7	8.3	11.5
CA550F4K19F1	41.4	20.24	22.23	52.5	76.2	12.7	8.3	10.0
CA550K1F9	41.4	19.81	22.00	50.8	76.2	12.7	8.3	11.7
CA555K1	41.4	12.70	22.00	52.5	76.2	12.7	8.3	10.0

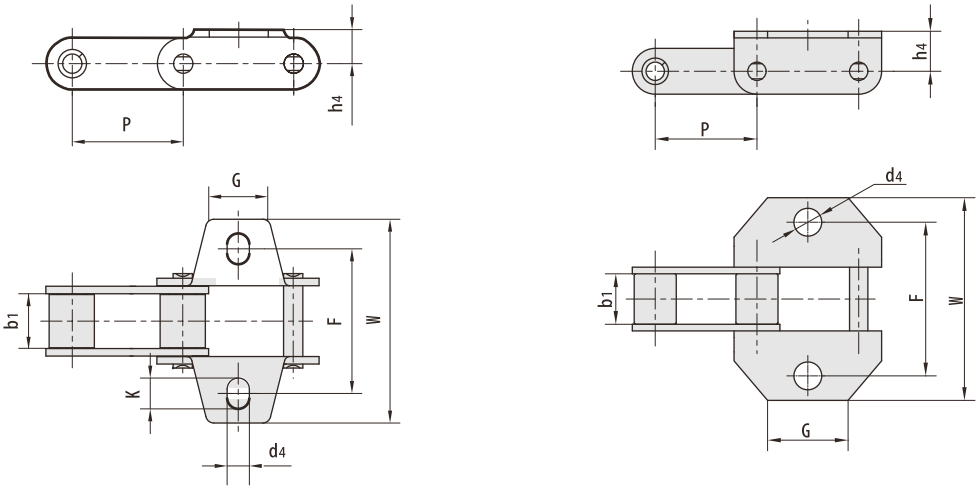

RBL chain number	P mm	b1 mm	G mm	F mm	W mm	h4 mm	d4 mm
38.4RF5K1	38.4	19.05	29.1	58.0	76.5	11.0	8.0
38.4RF7K1	38.4	19.05	30.0	59.7	78.5	11.4	8.3
38.4RK1	38.4	19.05	29.1	58.0	76.5	15.1	10.5
38.4RK1F11	38.4	19.05	40.0	57.0	86.0	16.0	10.5
38.4RK1F6	38.4	19.05	40.0	57.0	84.0	16.5	10.3
38.4V BF3	38.4	19.05	40.0	57.0	86.0	16.0	10.3
38.4VBK 1	38.4	19.05	29.0	58.0	87.0	14.0	10.5
38.4VBK1F3	38.4	19.05	39.0	57.0	80.0	16.0	10.5
38.4VK1F1	38.4	18.00	29.1	57.0	75.0	15.1	8.5
38.4VK1F10	38.4	18.00	39.0	58.4	82.4	14.5	10.5
38.4VK1F11	38.4	18.00	35.0	57.0	76.1	16.0	9.0
38.4V K1F2	38.4	18.00	29.1	57.0	75.0	15.1	10.5
38.4V K1F3	38.4	18.00	29.1	57.0	75.0	15.1	9.0
CA550HF7K1	41.4	20.00	22.6	56.7	74.3	13.2	8.5
CA550HK1	41.4	20.00	22.6	54.0	71.5	12.7	8.5
CA550K18	41.4	19.81	22.6	54.0	71.6	12.7	8.5
CA550K1F6	41.4	19.81	48.5	54.0	76.2	16.5	10.5
CA550VK18	41.4	19.05	22.6	54.0	71.6	12.7	8.5

RBL chain number	P mm	b1 mm	G mm	F mm	W mm	h4 mm	d4 mm
38.4VK1F8	38.40	18.00	40.0	57.0	86.00	16.0	10.5
38.4V BF5	38.40	19.05	40.0	57.0	86.00	14.0	10.5
38.4V BF6	38.40	19.05	20.0	57.0	75.00	16.0	8.6
38.4V BF7	38.40	19.05	40.0	58.5	86.60	14.0	10.5
CA550K1F4	41.40	19.81	48.5	54.0	76.20	16.5	8.5
CA550VK1F3	41.40	19.05	56.0	54.0	75.54	16.5	8.5
CA550K1F6	41.40	19.81	48.5	54.0	76.20	16.5	10.5
CA550K18	41.40	19.81	22.6	54.0	71.60	12.7	8.5
CA620A1F1	42.01	24.51	63.5	67.7	91.70	16.1	10.5
CA620W K1F1	42.01	24.51	62.2	69.0	90.80	16.2	10.3

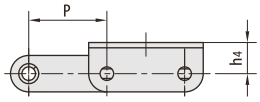

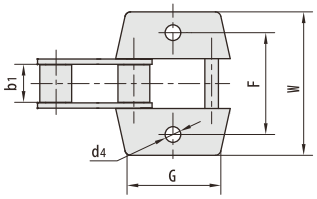

RBL chain number	P mm	b1 mm	G mm	F mm	W mm	h4 mm	d4 mm	K mm
CA550K19	41.4	19.81	22.0	50.8	71.0	12.7	8.3	11.0
CA550K19F1	41.4	19.81	22.0	54.0	71.0	12.7	8.3	11.0
CA550K19F2	41.4	19.81	25.4	50.8	71.0	12.7	8.4	11.5

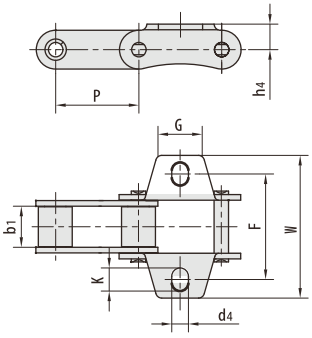

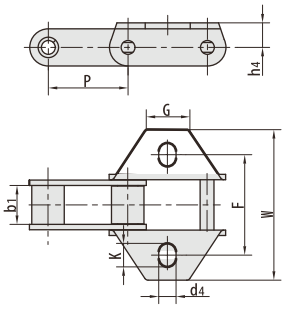

RBL chain number	P mm	b1 mm	G mm	F mm	W mm	h4 mm	d4 mm	K mm
CA550K1F21	41.4	19.81	22.60	53.60	73.0	12.4	10.4	12.0
CA550VK1F4	41.4	19.05	34.00	54.00	83.0	15.0	8.2	11.5
CA557F2	41.4	20.24	22.23	53.98	79.3	14.3	9.9	13.6

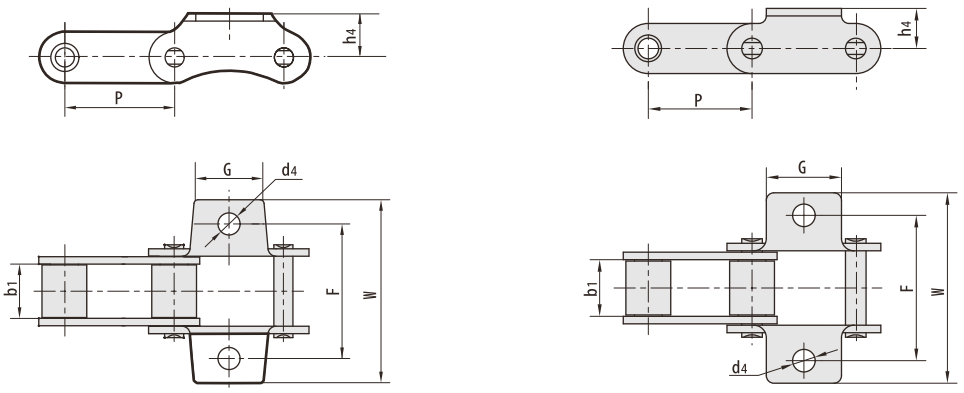

RBL chain number	P mm	b1 mm	G mm	F mm	W mm	h4 mm	d4 mm
CA550F1	41.4	19.81	22.23	53.95	70.6	12.7	9.90
CA550F20K19	41.4	20.24	22.00	50.80	71.0	12.7	9.75
CA550K19F3	41.4	19.81	25.50	50.80	68.4	16.5	8.33
CA550K1F20	41.4	19.81	22.20	50.50	71.1	12.7	8.33
CA550VK19F1	41.4	19.05	25.50	50.80	67.8	16.5	8.33
CA557AK4	41.4	20.24	26.19	50.80	69.4	16.5	8.33
CA557AK4F1	41.4	20.24	26.00	53.50	80.6	16.5	10.70
CA557K1F9	41.4	20.24	21.00	55.00	78.5	17.4	10.00

RBL chain number	P mm	b1 mm	G mm	F mm	W mm	h4 mm	d4 mm
CA2060A1F1	38.10	12.57	28.6	42.9	67.8	14.7	5.50
CA2060HA1F1	38.10	12.57	27.0	38.0	56.0	13.0	8.30
CA2060HK1F2	38.10	12.57	28.6	42.9	67.8	14.7	5.50
38.4V BF15K1	38.40	19.05	47.0	57.0	79.0	14.0	10.50
38.4VBK1F1	38.40	19.05	47.0	57.0	79.0	14.0	10.50
38.4VK1F12	38.40	18.85	47.0	58.0	77.0	11.8	8.50
55VDK1	41.40	23.00	30.0	58.0	76.0	16.0	9.0
CA550A1F5	41.40	19.81	38.1	74.6	105.6	12.7	10.3
CA557A1F1	41.40	20.24	38.1	74.6	105.6	12.7	10.3
CA557A1F3	41.40	20.24	38.1	75.5	107.4	15.9	10.30
CA557F5K1	41.40	20.24	38.1	54.2	78.3	16.5	10.50
CA557F9K1	41.40	20.24	45.0	54.2	78.3	16.5	10.50
CA557K1F5	41.40	20.24	27.0	50.0	75.0	17.7	8.5
CA557K1F8	41.40	20.24	28.6	50.6	73.6	14.3	9.92
S77F1K1	58.34	22.23	40.0	77.0	128.0	20.0	10.5
S77F2K1	58.34	22.23	40.0	77.0	132.0	25.0	10.5

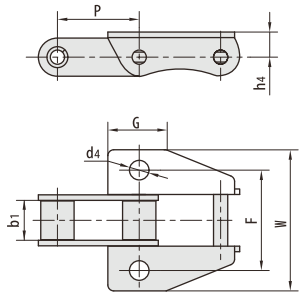

RBL chain number	P mm	b1 mm	G mm	F mm	W mm	h4 mm	d4 mm
CA550F5K39M	41.4	20.24	29.5	50.80	71.40	12.70	10.3
CA550HK39M	41.4	20.00	31.0	57.00	78.00	14.20	10.5
CA550K39M	41.4	19.81	29.5	50.80	71.40	12.70	9.8
CA550K39MF3	41.4	19.81	29.5	50.80	71.40	12.70	10.3
CA550K39M F4	41.4	19.81	30.0	50.50	71.14	12.70	9.9
CA557K39M	41.4	20.24	29.5	50.80	71.40	12.70	9.8
C A557K39M F1	41.4	20.24	22.0	57.15	77.60	14.00	9.9
CA557K39MF3	41.4	20.24	31.0	57.00	78.00	14.50	10.3
CA557K39M F17	41.4	20.24	29.5	57.15	73.56	13.84	8.7

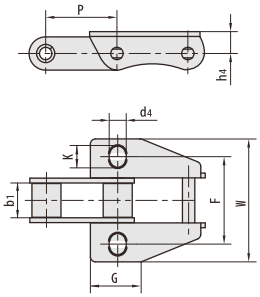

RBL chain number	P mm	b1 mm	G mm	F mm	W mm	h4 mm	d4 mm	K mm
CA550K39MF2	41.4	19.81	29.5	50.80	71.4	12.7	9.9	13.0
CA557K39M F2	41.4	20.24	29.5	50.80	71.4	12.7	9.9	13.0
CA557K39M F6	41.4	20.24	29.5	53.98	74.5	12.7	9.9	13.0
A557F1K39MF3	41.4	20.24	31.0	54.00	78.0	12.7	10.5	12.5

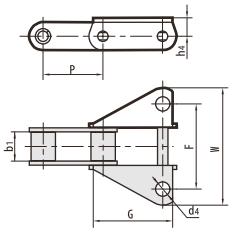

RBL chain number	P mm	b1 mm	G mm	F mm	W mm	h4 mm	d4 mm
38.4V 8 F8	38.4	19.05	20.0	58.00	87.4	14.0	10.5
38.4V BK39M	38.4	19.05	20.0	58.00	87.4	14.0	10.5
CA557F1	41.4	20.24	60.0	53.94	76.2	14.6	9.9

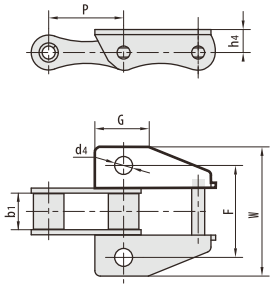

RBL chain number	P mm	b1 mm	G mm	F mm	W mm	h4 mm	d4 mm
A557K39M	41.4	20.24	29.5	56.70	77.8	13.5	10.10
A557K39MF2	41.4	20.24	29.5	56.70	77.8	13.5	10.50
A557K39MF1	41.4	20.24	31.0	57.15	78.0	14.2	10.50
A557K35M	41.4	20.24	30.0	50.80	73.5	14.1	10.31
A557K39MF4	41.4	20.24	29.5	56.70	77.8	13.5	10.30
A557K39MF7	41.4	20.24	29.5	63.00	88.0	13.5	11.00
A557F1K39M	41.4	20.24	31.0	57.00	78.0	14.2	10.50
A557K39MF3	41.4	20.24	31.0	50.80	71.4	14.3	8.30
A557F16K39M	41.4	20.24	28.0	63.50	88.9	14.2	10.50
A557K39MF9	41.4	20.24	31.0	57.20	77.7	13.8	10.30
A557K39MF10	41.4	20.24	31.0	57.20	77.7	14.3	9.90

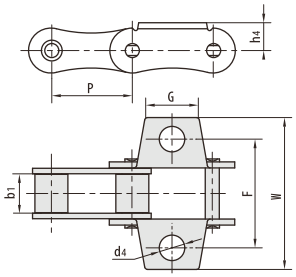

RBL chain number	P mm	b1 mm	G mm	F mm	W mm	h4 mm	d4 mm
A557F1K1	41.4	20.24	26.2	51.00	71.60	16.51	8.33
A557F2K1	41.4	20.24	28.6	57.20	79.10	14.30	13.10
A557K1F9	41.4	20.24	28.6	55.80	78.00	14.30	13.10
A557K27S	41.4	20.24	28.6	57.15	79.35	14.30	13.10

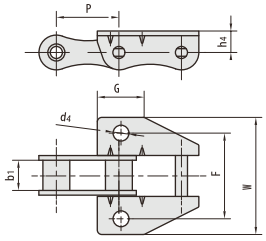

RBL chain number	P mm	b1 mm	G mm	F mm	W mm	h4 mm	d4 mm
A557F4K39M	41.4	20.24	31.0	57.00	78.0	14.2	10.5
A557F7K39M	41.4	20.24	31.0	57.20	78.0	14.2	10.5
A557K39M F13	41.4	20.24	22.0	63.50	88.9	14.0	11.0

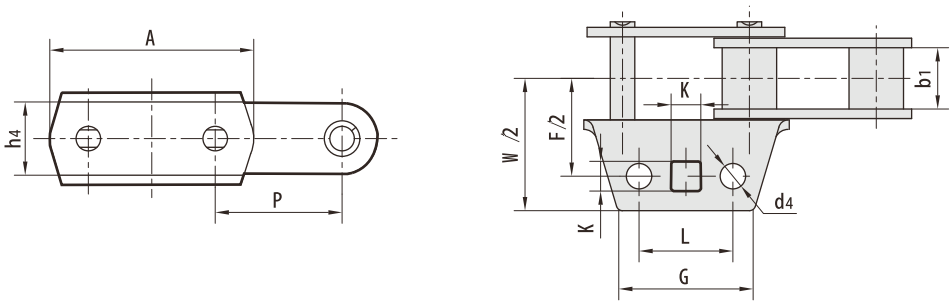

RBL chain number	P mm	b1 mm	A mm	L mm	G mm	F mm	W mm	h4 mm	d4 mm	K mm
CA557F3	41.4	20.24	66.55	30.22	44.45	64.14	86.6	23.9	8.25	9.7

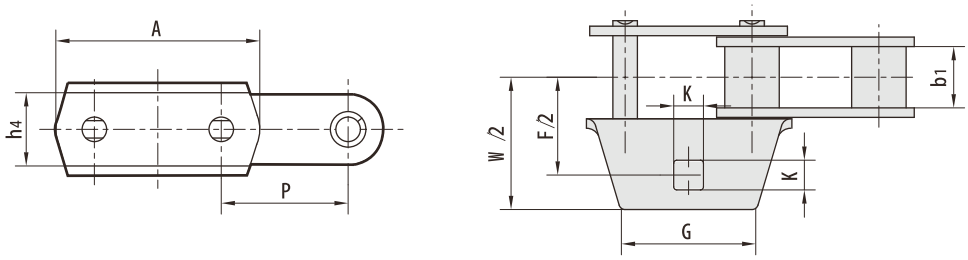

RBL chain number	P mm	b1 mm	A mm	G mm	F mm	W mm	h4 mm	K mm
CA557F4	41.4	20.24	66.55	44.45	64.14	86.6	23.9	9.7

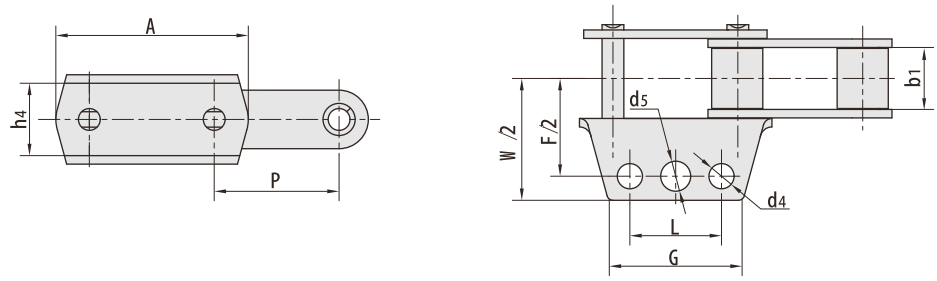

RBL chain number	P mm	b1 mm	A mm	L mm	G mm	F mm	W mm	h4 mm	d4 mm	d5 mm
CA550F7	41.4	19.81	63.5	30.22	44.45	64.1	81.4	23.88	8.25	9.9

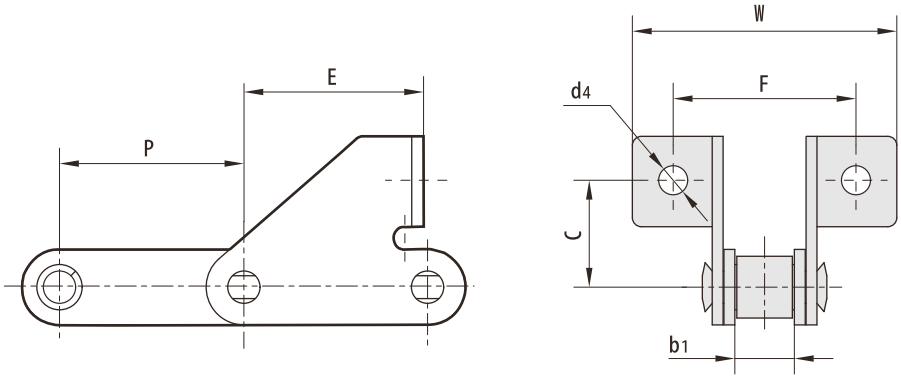

RBL chain number	P mm	b1 mm	E mm	F mm	W mm	C mm	d4 mm
38.4RSD	38.4	19.05	38.4	52.0	71.0	24.5	8.4
38.4RSDF1	38.4	19.05	38.4	52.0	70.0	24.5	8.4
38.4RSDF2	38.4	19.05	38.4	52.0	71.0	24.5	9.0
38.4RSDF3	38.4	19.05	38.2	52.0	72.0	24.0	8.4
38.4RSDF4	38.4	19.05	37.4	52.0	71.0	24.0	8.4
38.4RSDF5	38.4	19.05	35.9	60.0	79.0	24.0	6.4
38.4RSDF6	38.4	19.05	38.4	62.0	81.0	24.5	8.5
38.4RSDF7	38.4	19.05	38.4	60.0	81.0	24.5	8.4
38.4RSDF8	38.4	19.05	38.4	60.0	81.0	24.5	6.4
38.4RSDF10	38.4	19.05	38.4	52.0	71.0	24.5	8.4
38.4VBSD	38.4	19.05	38.4	52.0	71.0	25.0	8.4
38.4VBSDF1	38.4	19.05	38.4	52.0	73.0	24.0	8.3
38.4VBSDF2	38.4	19.05	38.4	52.0	73.0	24.0	8.4
38.4VBSDF3	38.4	19.05	38.4	52.0	70.1	24.5	8.5
38.4V BSDF4	38.4	19.05	38.2	52.0	72.0	24.0	8.4
38.4VBSDF5	38.4	19.05	37.4	52.0	73.0	24.0	8.7
38.4V SD	38.4	18.00	38.4	52.0	71.0	24.0	8.4
CA550F5SDF1	41.4	20.24	36.9	47.6	68.2	31.0	8.7
CA550HSDF3	41.4	20.00	33.5	61.3	88.5	21.5	8.4
CA550SD	41.1	19.81	36.9	47.6	68.2	31.0	8.7
CA550SDF4	41.4	19.81	36.9	47.6	89.0	31.0	8.7
CA550SDF10	41.4	19.81	37.7	47.6	68.2	31.0	8.5

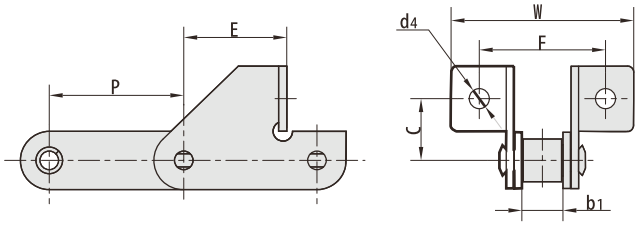

RBL chain number	P mm	b1 mm	E mm	F mm	W mm	C mm	d4 mm
CA550SDF1	41.4	19.81	35.0	58.0	85.0	20.5	8.5
CA550SDF2	41.4	19.81	32.5	62.0	84.0	20.0	8.6
CA550SDF3	41.4	19.81	35.0	58.0	85.0	20.5	6.5
CA550SDF6	41.4	19.81	33.0	58.0	85.0	20.5	6.5
CA550SDF7	41.4	19.81	32.5	62.0	89.0	20.0	8.6
CA550F5SD	41.1	20.24	33.0	57.8	83.5	20.0	6.7
CA550F8SD	41.4	19.81	33.0	58.0	85.9	20.5	6.5
CA550SDFS	41.4	19.81	34.0	63.0	89.0	20.0	8.0
CA550SDF11	41.4	19.81	31.0	58.0	85.0	20.5	8.5
CA550SDF12	41.4	19.81	31.0	58.0	85.0	20.5	6.5
CA550HSD	41.4	20.00	33.4	58.0	90.0	20.0	6.5
CA550VSD	41.4	19.05	35.0	58.0	88.6	20.5	6.5

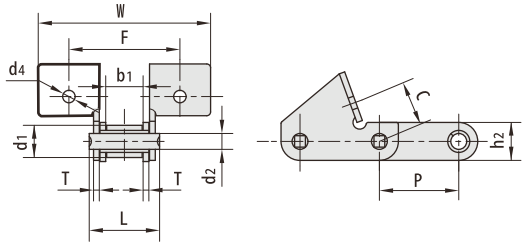

RBL chain number	P mm	C mm	F mm	W mm	d4 mm
CA550VF1	41.4	23.4	58	90.0	6.5
CA550F10	41.4	23.4	58	90.0	6.5
CA550HF4	41.4	23.4	58	90.0	6.5
CA550HF6	41.4	23.4	58	90.0	8.5
CA550HF5	41.4	23.4	58	90.0	9.9

RBL chain number	Pitch P mm	Roller diameter d1 max mm	Width between inner plates b1 min mm	Pin diameter d2 max mm	Pin length L max mm	plate depth h2 max mm	Plate thickness T max mm	Tensile strength Q min kN/LBF	Weight q kg/m
CA550VF1	41.4	16.80	19.50	8.28	36.7	19.80	3.0	44.00/9898	2.50
CA550F10	41.4	16.70	19.81	7.14	36.2	19.05	3.0	53.00/11922	2.38
CA550HF4	41.4	16.74	20.00	7.14	36.0	19.10	3.0	57.78/12998	2.73
CA550HF6	41.4	16.74	20.00	7.14	36.0	19.10	3.0	57.78/12998	2.71
CA550HF5	41.4	16.74	20.00	7.14	36.0	19.10	3.0	57.78/12998	2.34

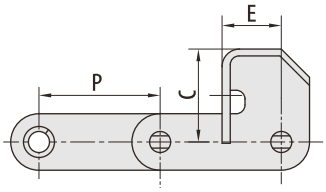

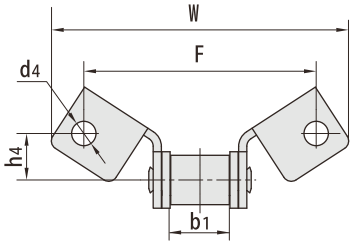

RBL chain number	P mm	b1 mm	E mm	C mm	F mm	W mm	h4 mm	d4 mm
CA550F14	41.4	19.81	20.24	31.75	79.40	101.60	15.90	8.33
CA550F16	41.4	20.00	22.30	39.00	78.00	109.20	17.70	8.00
CA550F19	41.4	19.81	20.24	31.75	79.40	101.60	15.90	10.50
CA550F24	41.4	19.81	20.24	31.75	79.10	101.30	15.87	8.33
CA550F5-F14	41.4	20.24	20.24	31.75	79.40	101.60	15.90	8.33
CA550F5-F14SF	41.4	20.24	21.34	31.75	79.40	101.60	15.90	9.91
CA550F5-F17	41.4	20.24	28.80	40.89	114.30	143.70	20.57	9.91
CA550SEF1	41.4	19.81	21.60	40.00	79.30	115.60	15.90	10.31
CA550VF14	41.4	19.05	20.24	31.75	79.40	101.60	15.90	8.33
CA550V-F15	41.4	19.05	28.80	91.40	134.10	203.70	52.40	8.70
CA550VF2SE	41.4	19.05	24.50	59.60	79.40	135.40	28.50	8.70
CA550VF2SEF1	41.4	19.05	24.25	73.30	79.40	111.30	52.60	8.74
CA550VF2SEF3	41.4	19.05	20.20	50.00	79.40	121.80	28.58	8.74
CA550VF2SEF5	41.4	19.05	29.10	102.30	134.10	203.70	52.40	8.70
CA550VF2SEF6	41.4	19.05	28.40	102.30	133.30	201.90	52.40	9.90
CA557F14	41.4	20.24	19.60	34.00	79.40	109.80	15.88	8.60
CA557SFD	41.4	20.24	24.30	50.10	79.40	109.80	28.60	8.30
CA557SFDF1	41.4	20.24	24.30	50.10	79.40	109.80	28.60	9.53

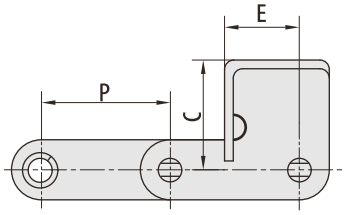

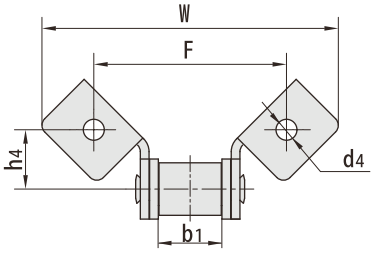

RBL chain number	P mm	b1 mm	E mm	C mm	F mm	W mm	h4 mm	d4 mm
CA550F15	41.4	19.81	24.00	35.26	61.98	95.25	19.05	6.73
CA550F17	41.4	19.81	23.68	40.89	114.30	143.70	20.57	9.91
CA550VF13	41.4	19.05	25.40	59.60	79.35	135.45	28.60	8.74
CA550F18	41.4	19.81	24.00	35.26	61.98	95.25	19.05	8.33
CA550F5-F17	41.4	20.24	23.68	40.89	114.30	143.70	20.57	9.91
CA550F5-G18	41.4	20.24	24.13	20.32	63.50	84.00	8.38	8.38
CA550VF17	41.4	19.05	23.68	40.89	114.30	143.70	20.57	9.91

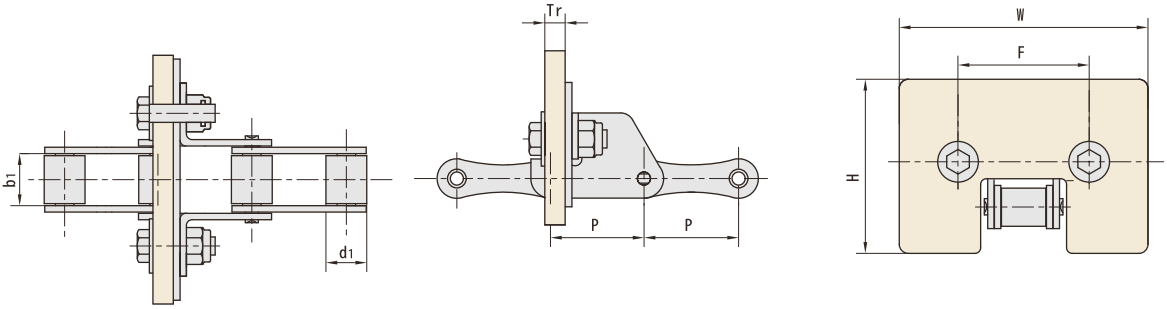

RBL chain number	Pitch	Roller diameter	Width between inner plates	Rubber attachment dimension			
	P mm	d1 max mm	b1 min mm	W max mm	H max mm	F mm	Tr mm
S52LF1SD—G	38.1	15.24	16.40	152.0	80.0	54.5	9.0
S52L-G	38.1	15.24	16.40	150.0	78.7	54.5	10.0
S55SDF2-G	38.1	15.24	22.23	107.0	84.0	57.6	10.0
38.4RSDF10-G	38.4	15.88	19.05	107.0	80.0	52.0	9.0
38.4RSD-G	38.4	15.88	19.05	154.0	78.0	52.0	9.0
38.4VBSDF2-G	38.4	15.88	19.05	154.0	124.0	52.0	9.0
38.4VSD-G F1	38.4	15.88	18.00	113.0	75.0	52.0	10.0
38.4V SD-GF 2	38.4	15.88	18.00	150.0	95.0	52.0	10.0
CA550HF6-G	41.4	16.74	20.00	197.0	96.0	58.0	9.0
55VSE-G	41.4	17.90	22.23	200.0	100.0	88.0	10.0
55VSEL-GF1	41.4	17.90	22.23	145.0	109.0	88.0	10.0
C A550F14-G	41.4	16.87	19.81	152.0	79.0	79.4	9.0
CA550F14-GF1	41.4	16.87	19.81	145.0	105.0	79.4	11.0
CA550F14-GF2	41.4	16.87	19.81	145.0	105.0	79.4	9.0
CA550F14-GF3	41.4	16.87	19.81	152.0	79.0	79.4	9.0
CA550F17-G	41.4	16.87	19.81	190.0	96.0	114.3	12.0
CA550F5-F17-GF1	41.4	16.66	20.24	194.5	103.5	114.3	11.0
CA550HSDF3-G	41.4	16.74	20.00	149.0	74.0	61.3	10.0
CA550HSD-G	41.4	16.74	20.00	147.0	86.0	58.0	10.0
CA550SDF1-G	41.4	16.87	19.81	151.0	85.0	58.0	9.0
CA550SEF1-G	41.4	16.87	19.81	152.0	80.0	79.3	10.0
CA550VF14-G	41.4	16.80	19.05	142.9	79.4	79.4	12.7
CA550V-F15-G	41.4	16.80	19.05	247.0	130.0	134.1	11.0
CA550VF2SEF3-G	41.4	16.80	19.05	197.0	108.0	79.4	11.0
CA550VF2SEF3-GF1	41.4	16.80	19.05	224.0	122.5	79.4	11.5
C A550VF2S E L-G	41.4	16.80	19.05	224.0	122.5	79.4	11.0
S45HF3-G	41.4	15.24	22.23	123.0	74.0	61.3	9.0
S45HSDF1-G	41.4	15.24	22.23	165.0	100.0	63.5	9.0
S45SDF1-G	41.4	15.24	22.23	150.0	100.0	62.0	9.0
S45W F4-G	41.4	15.24	22.23	137.0	87.0	58.0	10.0
S55F2-G	41.4	17.78	22.23	114.0	98.0	58.0	10.0
S55F6-G	41.4	17.78	22.23	110.0	85.0	58.0	9.0
S55SDF2-G	41.4	17.78	22.23	147.6	85.0	58.0	10.0

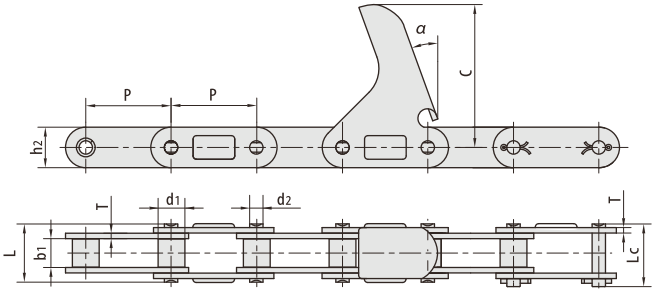

RBL chain number	Pitch	Roller diameter	Width between inner plates	Pin diameter	Pin length		Plate dimension				Tensile strength	Weight
	P	d1 max	b1 min	d2 max	L max	Lc max	h2 max	T	C	a	Q min	q
	mm	mm	mm	mm	mm	mm	mm	mm	mm		kN/LBF	kg/m
CA2060-C6E	38.1	11.91	12.57	5.94	25.9	28.3	18.0	2.42	63.5	20.0°	31.1/6996	1.40
CA2060H-C6E	38.1	11.91	12.57	5.94	31.0	31.6	18.0	3.25	63.5	22.5°	31.1/6996	1.78
38.4VBF2-C6EF1	38.4	15.88	19.05	8.28	36.1	-	20.5	3.00	54.8	22.0°	50.0/11241	2.37
CA550V-C6EF1	41.4	16.80	19.05	8.28	36.1	39.1	22.0	3.00	50.5	15.0°	55.0/12364	2.65
CA550-LV41NF1	41.4	16.87	19.81	7.19	35.0	38.0	19.3	2.80	68.5	20.0°	39.1/8790	1.79
CA550HF10-LV41N	41.4	16.66	19.40	7.19	35.8	-	19.3	3.10	68.5	20.0°	39.1/8790	2.29
CA550HF8-LV41N	41.4	16.66	19.40	7.19	35.8	-	19.3	3.10	68.5	20.0°	39.1/8790	2.29

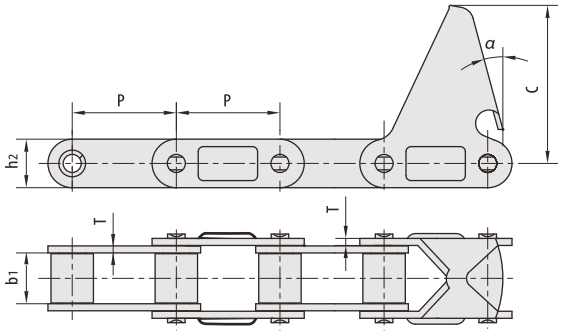

RBL chain number	P	b1	h2	T	C	*a*
	mm	mm	mm	mm	mm	
CA550-C6E	41.40	19.81	19.30	2.80	55.6	—
CA550-C11E	41.40	19.81	19.30	2.80	63.5	—
CA550-C11EJ	41.40	19.81	19.30	2.80	66.0	—
CA550-C13E	41.40	19.81	19.30	2.80	92.0	—
CA550F4-C6E	41.40	20.24	19.05	2.80	55.6	22.5°
CA550-C6EF1	41.40	19.81	19.30	2.80	50.0	—
CA620-C13E	42.01	24.51	20.20	3.25	92.0	—

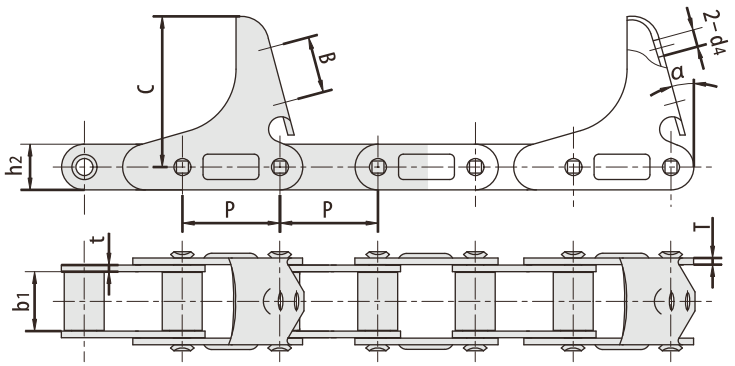

RBL chain number	p mm	b1 mm	h2 mm	t/T mm	C mm	B mm	d4 mm	*a*
CA620F5-C 6EJ	40.25	24.51	20.20	3.25/3.10	66.00	24.00	6.00	15°
CA555-C6E	41.40	12.70	19.30	3.10	63.50	-	-	15°
CA555-C6EJ	41.40	12.70	19.30	3.25	66.00	25.40	7.30	15°
CA555-C6EJF1	41.40	12.70	19.30	3.10	66.00	25.40	5.50	15°
CA555-C6EJF2	41.40	12.70	19.30	3.10	60.50	19.00	7.00	15°
CA555F3-C6EJ	41.40	12.70	19.30	3.15	66.00	25.40	7.30	15°
CA620F3-C6EJ	42.01	24.51	20.20	3.25/3.10	66.00	24.00	6.00	15°
CA620F7-C6EJ	42.01	25.00	20.20	3.10	66.00	24.00	6.00	15°

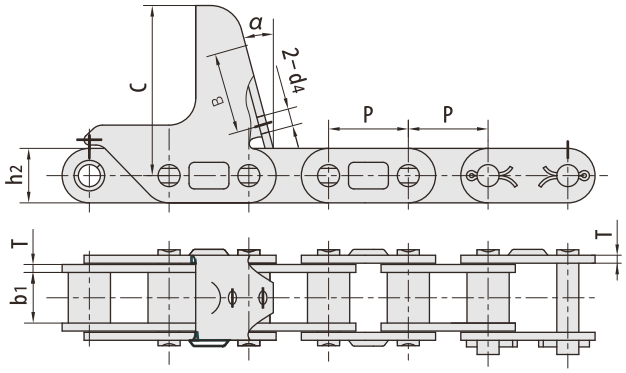

RBL chain number	p mm	b1 mm	h2 mm	B mm	d4 mm	T mm	C mm	*a*
CA627-M 40A	30.0	19.05	20.5	36.1	6.5	3.0	63.0	*15.0°*
CA627-CPEF6	30.0	19.05	20.5	30.0	6.0	3.0	63.3	22.5°
CA627-CPEF7	30.0	19.05	20.5	35.5	6.5	3.0	63.0	15.0°
CA627-CPEF10	30.0	19.05	20.5	30.0	6.0	3.0	63.3	22.5°
CA627-CPEF11	30.0	19.05	20.5	30.0	6.5	3.0	63.0	22.5°
CA627-CPEF14	30.0	19.05	20.5	25.5	6.5	3.0	63.0	15.0°
CA627-CPEF15	30.0	19.05	20.5	30.0	6.5	3.0	63.0	7.0°
CA627-CPEF17	30.0	19.05	20.5	30.0	6.0	3.0	64.0	22.5°
CA2060H-C6EF4	38.1	12.57	18.0	-	-	3.3	63.5	22.5°
CA550-CPEF9	41.4	19.81	19.3	-	-	2.8	63.0	21.0°

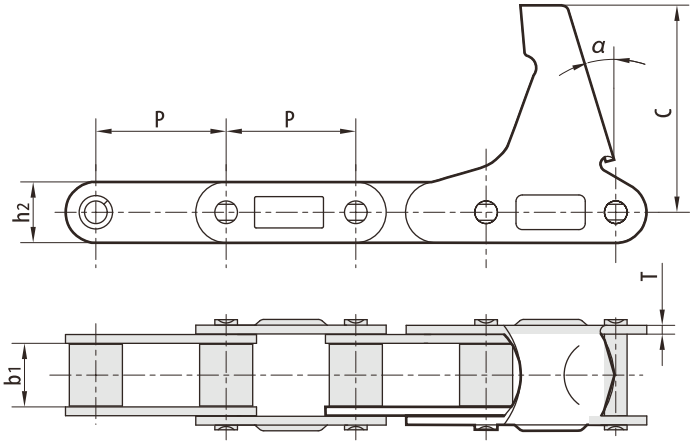

RBL chain number	p mm	b1 mm	h2 mm	T mm	C mm	*a*
CA550-LV41N	41.4	19.81	19.3	2.8	65.8	15°
C A550-LV41N F1	41.4	19.81	19.3	2.8	68.5	20°
CA550-CPEF3	41.4	19.81	19.3	2.8	72.0	15°
CA550-CPEF6	41.4	19.81	19.3	3.0	54.8	15°

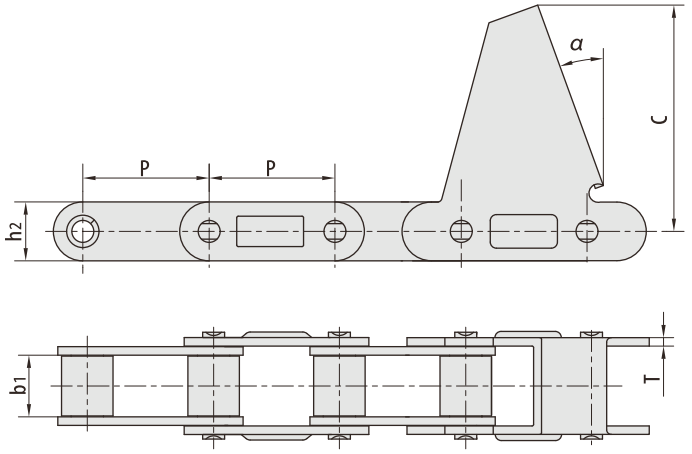

RBL chain number	P mm	b1 mm	h2 mm	T mm	C mm	*a*
38.4VBF12	38.4	19.05	20.5	3.0	62.5	22.5°
38.4V BF14	38.4	19.05	20.5	3.0	65.0	22.0°
CA550-CPE	41.4	19.81	19.3	2.8	74.5	20.0°

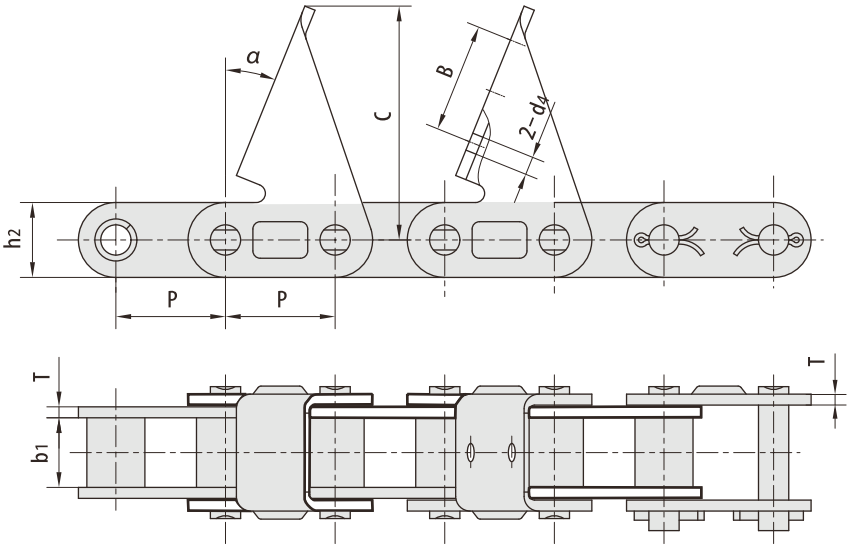

RBL chain number	P mm	b1 mm	h2 mm	B mm	d4 mm	T mm	C mm	*a*
CA627-CPE	30.0	19.05	20.5	-	-	3.0	64.0	22.0°
CA627-CPEF3	30.0	19.05	20.5	30.0	5.0	3.0	64.0	22.0°
CA2060HF2-CPEF1	38.1	12.70	19.3	30.0	8.3	3.1/2.8	60.0	22.5°

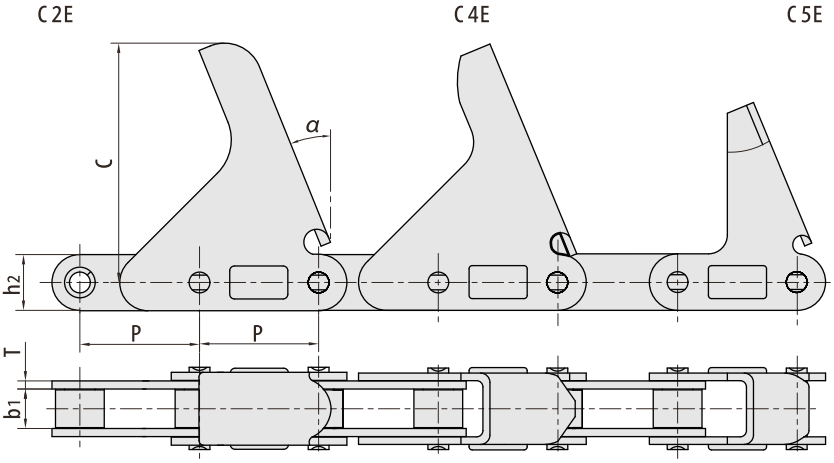

RBL chain number	P mm	b1 mm	h2 mm	T mm	C mm	*a*
CA2060H-C2E	38.1	12.57	18.0	3.25	76.2	22.5°
CA2060H-C4E	38.1	12.57	18.0	3.25	75.8	22.5°
CA2060H-C5E	38.1	12.57	18.0	3.25	57.2	22.5°

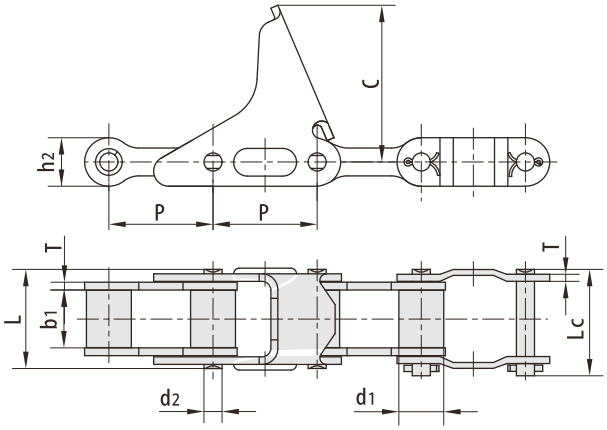

RBL chain number	Pitch	Roller diameter	Width between inner plates	Pin diameter	Pin length		Attachment dimension			Tensile strength	Weight
	P	d1 max	b1 min	d2 max	L max	Lc max	h2 max	T max	C max	Q. min	q
	mm	mm	mm	mm	mm	mm	mm	mm	mm	kN/LBF	kg/m
CA555F1	41.4	17.85	23.0	8.2	39.5	42.4	20.0	3.0	84.0	39.1/8795	2.99
CA555F2	41.4	17.85	23.0	8.2	39.5	42.4	20.0	3.0	62.5	39.1/8795	2.82

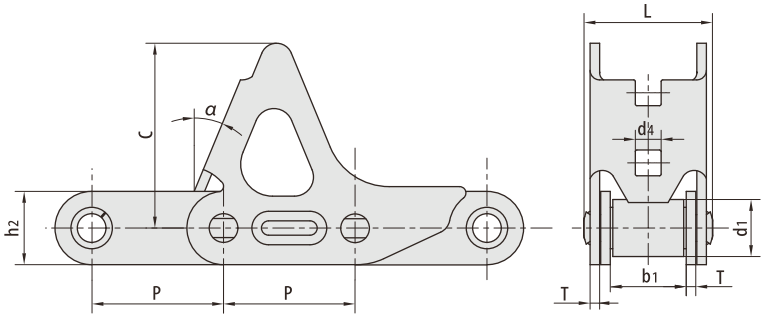

RBL chain number	Pitch	Roller diameter	Width between inner plates	Pin length	Plate dimension					Tensile strength	Weight
	P	d1 max	b1 min	L max	h2 max	T	C	d4	a	Q. min	q
	mm	mm	mm	mm	mm	mm	mm	mm		kN/LBF	kg/m
55VDF1-CPEF	41.4	17.90	22.50	39.7	23.0	3.0	58.0	8.1	22.5°	50/11248	3.68
55VF6-CPEF	41.4	15.88	22.23	41.6	22.0	4/3	51.5	-	28.0°	45/10117	3.35

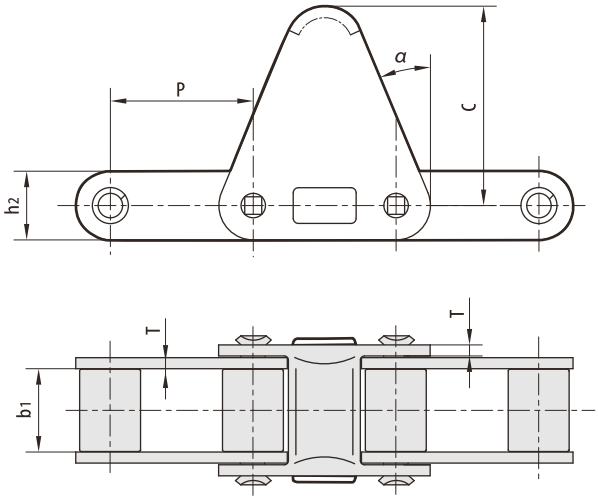

RBL chain number	P mm	b1 mm	h2 mm	T mm	C mm	*a*
CA620-C30E	42.01	24.51	20.2	3.25	58.7	22.5°

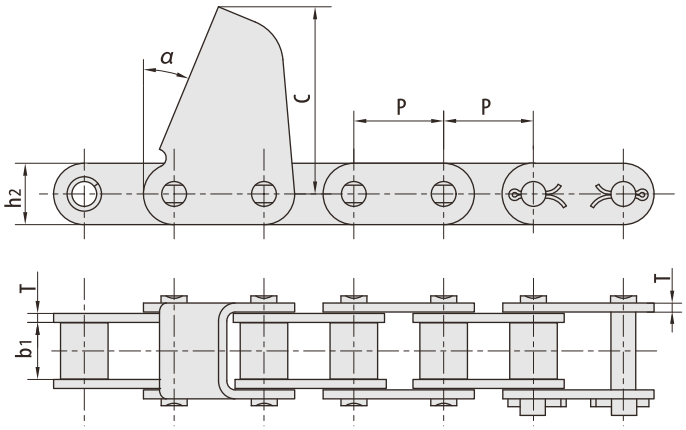

RBL chain number	P mm	b1 mm	h2 mm	T mm	C mm	*a*
CA627-CPEF1	30.0	19.05	20.5	3.0	62.5	22.5°
CA627-CPEF2	30.0	19.60	20.5	3.0	62.5	22.5°
CA627-CPEF4	30.0	19.05	20.5	3.0	62.5	22.5°
CA627-CPEF9	30.0	19.05	20.5	3.0	69.0	22°
CA550-CPEF2	41.4	19.81	19.3	2.8	63.5	15°

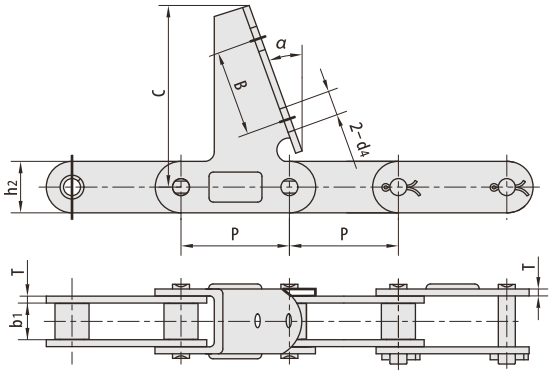

RBL chain number	P mm	b1 mm	h2 mm	d4 mm	T mm	B mm	C mm	*a*
CA627-CPEF5	30.0	19.05	20.5	6.60X 6.60	3.00	30.0	63.5	22.5°
C A627-C P E F13	30.0	19.05	20.5	6.60X 6.60	3.00	30.0	63.5	22.5°
CA627-CPEF16	30.0	19.60	20.5	6.50	3.00	30.0	63.5	22.5°
CA627-CPEF18	30.0	19.05	20.5	6.50	3.00	30.0	62.5	22.5°
CA2060H-7AUE	38.1	12.57	18.0	8.50	3.25	30.0	57.2	22.5°
CA2060H-CPEF2	38.1	12.57	18.0	-	3.25	-	57.0	22.0°
CA2060H-CPEF3	38.1	12.57	18.0	6.75	3.25	25.4	57.0	22.0°
CA414-CPEF1	41.4	15.88	20.1	-	3.00	-	66.0	20.0°
CA550-CPEF1	41.4	19.81	19.3	-	2.80	-	63.5	15.0°
CA550-CPEF4	41.4	19.81	19.3	-	2.80	-	75.8	20.0°
CA550-CPEF5	41.4	19.81	19.3	-	2.80	-	60.0	10.0°

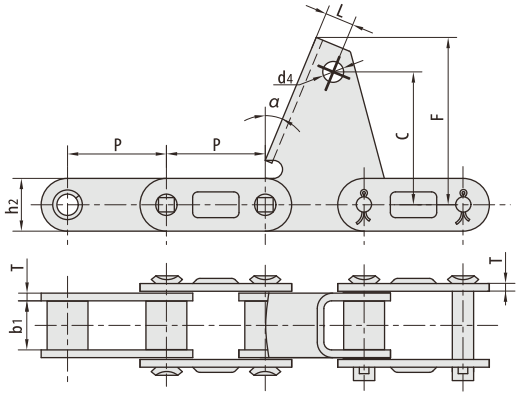

RBL chain number	P mm	b1 mm	h2 mm	L mm	d4 mm	T mm	C mm	F mm	*a*
38.4V BF4	38.4	19.05	20.5	15.0	8.1	3.0	48.0	64.0	22°

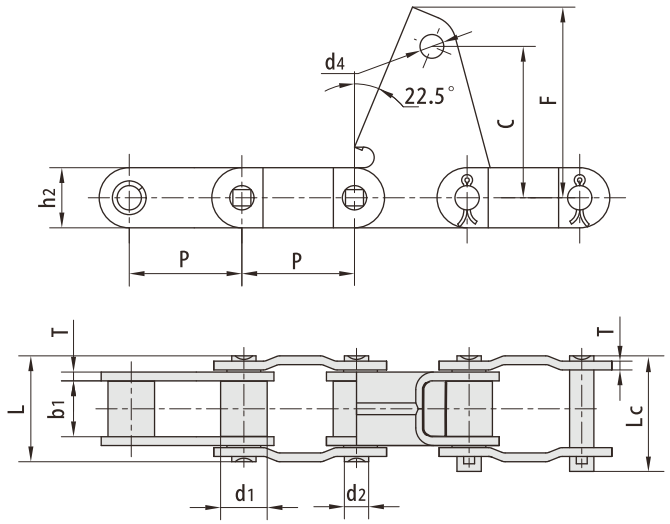

RBL chain number	Pitch	Roller diameter	Width between inner plates	Pin diameter	Pin length		Plate dimension					Tensile strength	Weight
	P	d1 max	b1 min	d2 max	L max	Lc max	h2 max	T	C	F	d4	Q. min	q
	mm	mm	mm	mm	mm	mm	mm	mm	mm	mm	mm	kN/LBF	kg/m
38.4V BF2	38.4	15.88	19.05	8.28	36.1	39.1	20.5	3.0	51.6	65	8.1	50/11247	2.33

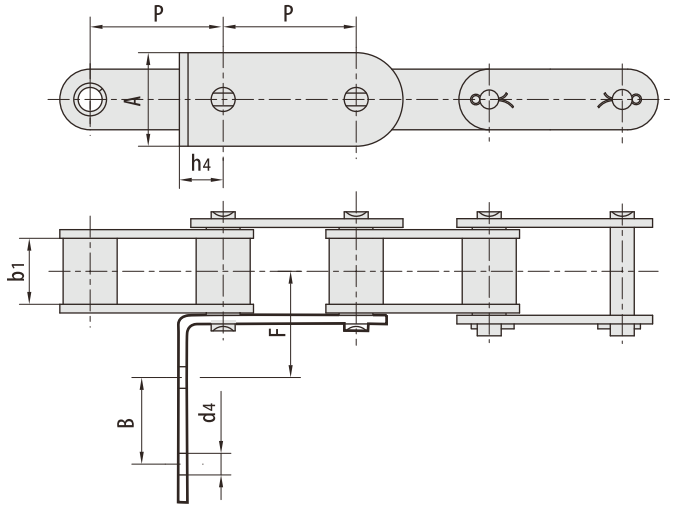

RBL chain number	P	b1	A	B	F	h4	d4
	mm	mm	mm	mm	mm	mm	mm
38.4RF2	38.4	19.05	27.0	25	31.3	12.7	6.8
CA550F21	41.4	19.81	19.3	-	41.7	12.5	7.0

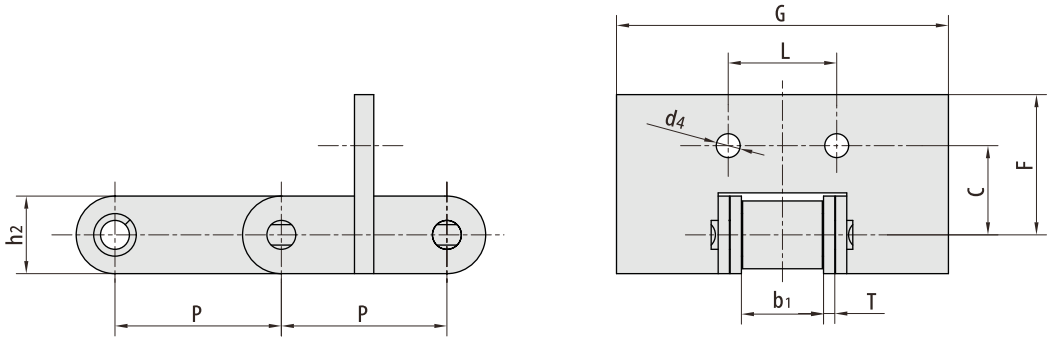

RBL chain number	P mm	b1 mm	C mm	F mm	L mm	G mm	h2 mm	T mm	d4 mm
CA550F11	41.4	19.81	22.2	34.9	27.0	82.6	19.3	2.8	5.95

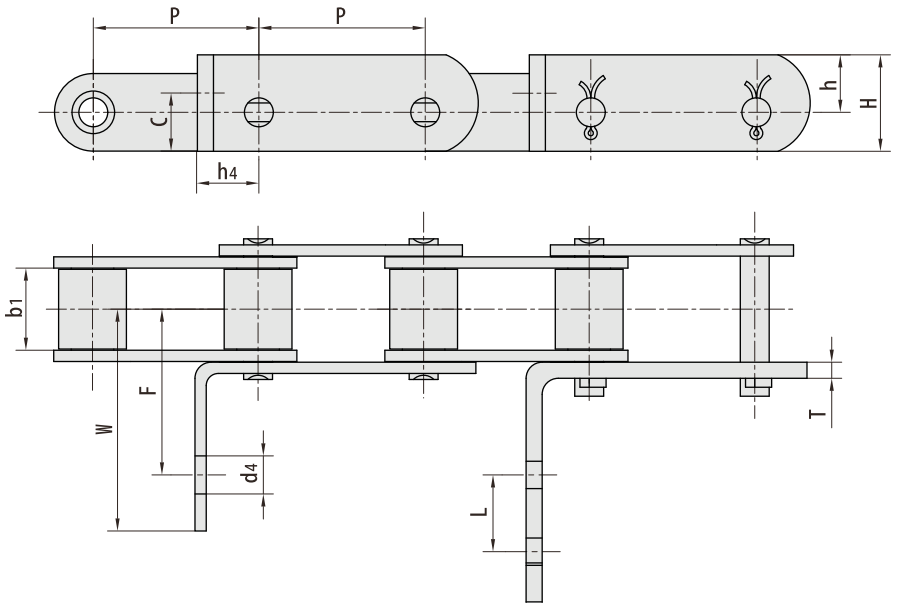

RBL chain number	P mm	b1 mm	C mm	h mm	H mm	h4 mm	F mm	L mm	W mm	T mm	d4 mm
CA550-GX	41.4	19.81	14.5	14.3	24.0	15.5	41.7	19.1	73.4	4.00	6.75
CA550-G27	41.4	19.81	14.5	14.3	24.0	15.9	41.7	-	55.2	2.80	8.33
CA550-G27S	41.4	19.81	14.5	14.3	24.0	15.9	41.7	-	55.2	3.25	8.33

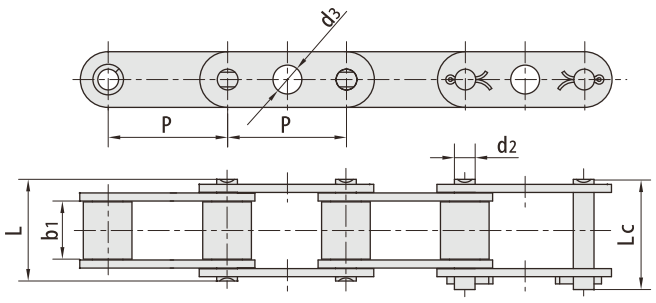

RBL chain number	P mm	b1 mm	d2 mm	d3 mm	L mm	Lc mm
CA550GKF1	41.4	19.81	7.19	10	35	38
CA550GKF3	41.4	19.81	7.19	12	35	38

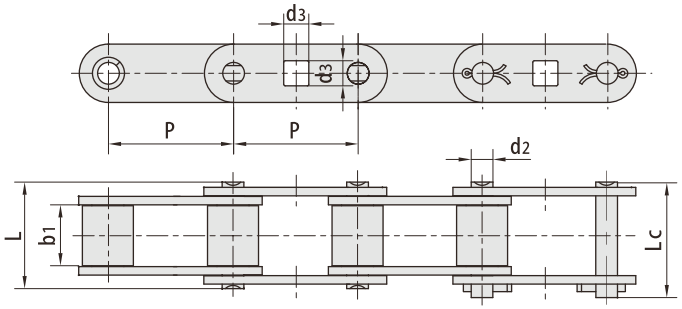

RBL chain number	P mm	b1 mm	d2 mm	d3 mm	L mm	Lc mm
CA550GKF2	41.4	19.81	7.19	8.3	35	38

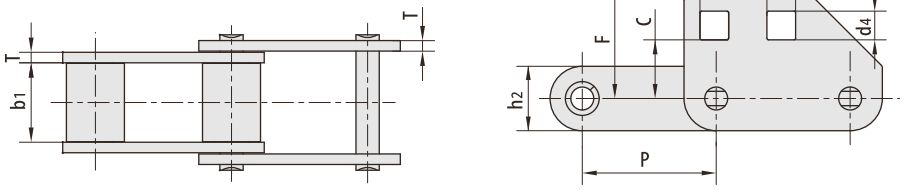

RBL chain number	P mm	b1 mm	L mm	T mm	C mm	F mm	d4 mm
CA620F2	42.01	24.51	30	3.25	18.4	35.9	9

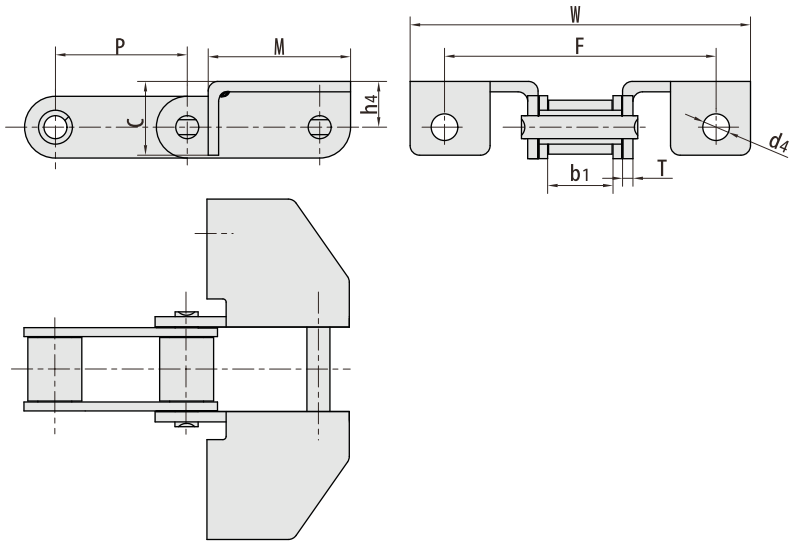

RBL chain number	P mm	b1 mm	M mm	C mm	F mm	W mm	T mm	h4 mm	d4 mm
CA550-F7A	41.4	19.81	44.5	23.3	84.9	106.4	3.25	14.3	8.33
CA550G 57	41.4	19.81	44.5	23.3	-	106.4	3.25	14.3	-

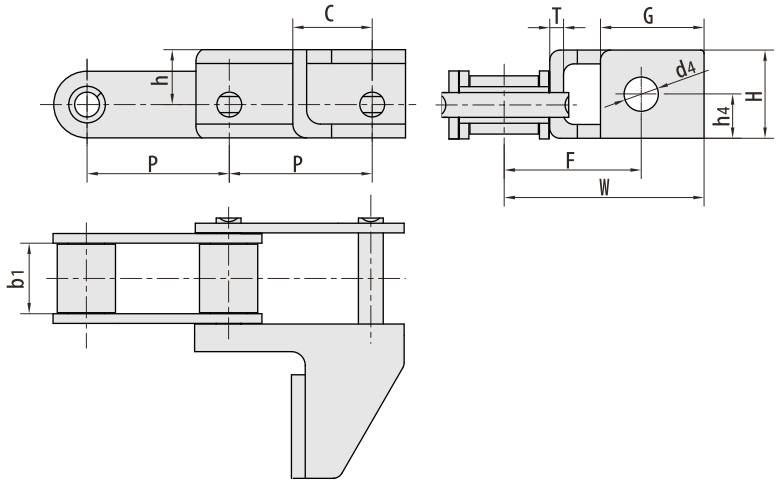

RBL chain number	P mm	b1 mm	C mm	h mm	H mm	G mm	h4 mm	F mm	W mm	T mm	d4 mm
CA550-G50	41.4	19.81	23.0	17.5	27.2	30.0	12.9	39.7	57.9	4.0	9.92
CA550-G50S	41.4	19.81	23.0	15.9	25.6	30.0	12.9	39.7	57.9	4.0	9.92
P41.4F8	41.4	20.00	24.5	13.8	31.6	25.5	13.8	40.1	55.8	4.0	13.60

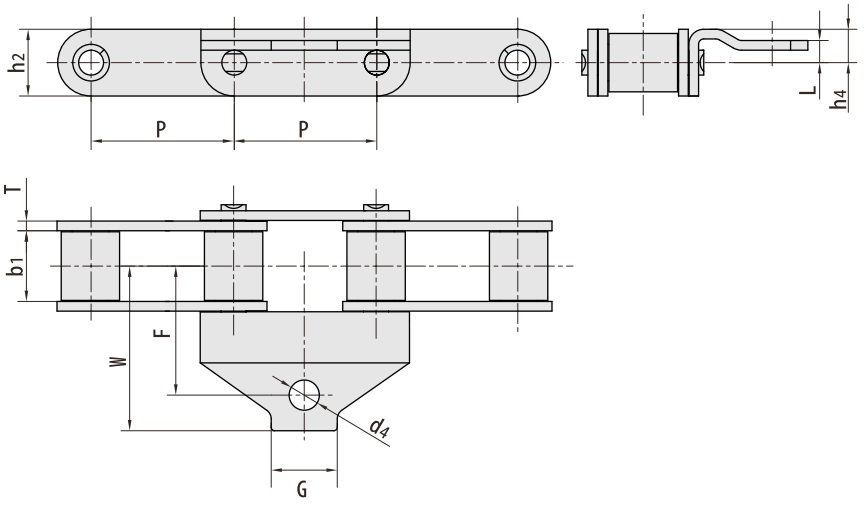

RBL chain number	P mm	b1 mm	G mm	F mm	W mm	h2 mm	L mm	h4 mm	T mm	d4 mm
CA550AH	41.4	19.81	19.1	37.3	47.6	19.3	6.4	9.65	2.8	8.73
CA550AHF1	41.4	19.81	25.4	37.3	47.6	19.3	6.4	9.70	2.8	8.71

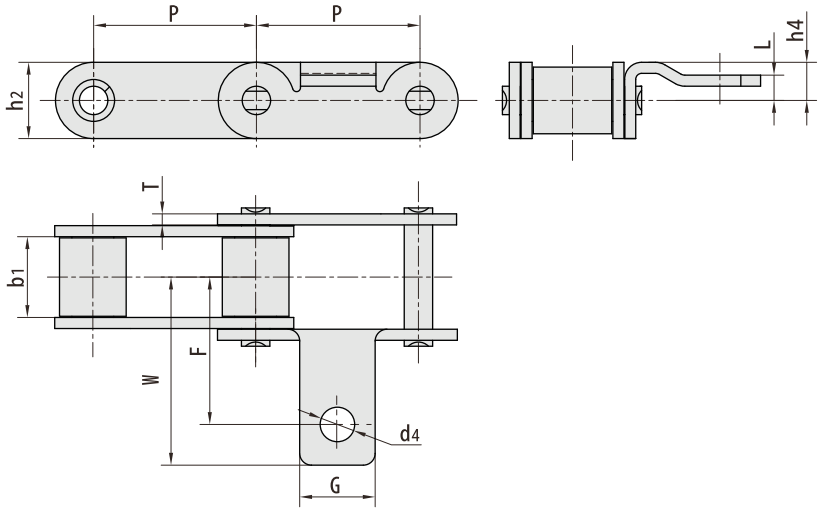

RBL chain number	P mm	b1 mm	G mm	F mm	W mm	h2 mm	L mm	h4 mm	T mm	d4 mm
CA550AID	41.4	19.81	19.1	37.3	47.6	19.3	6.4	9.65	2.8	8.73

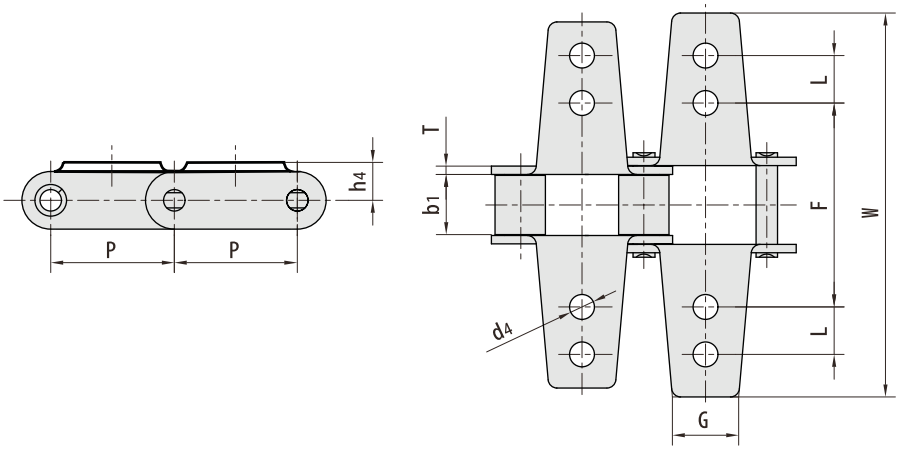

RBL chain number	P mm	b1 mm	L mm	G mm	F mm	W mm	h4 mm	T mm	d4 mm
CA550K6	41.40	19.81	15.9	22.2	68.3	128.6	12.7	2.80	8.33
CA620K12	42.01	24.51	15.9	22.2	69.9	130.2	23.8	3.25	6.75

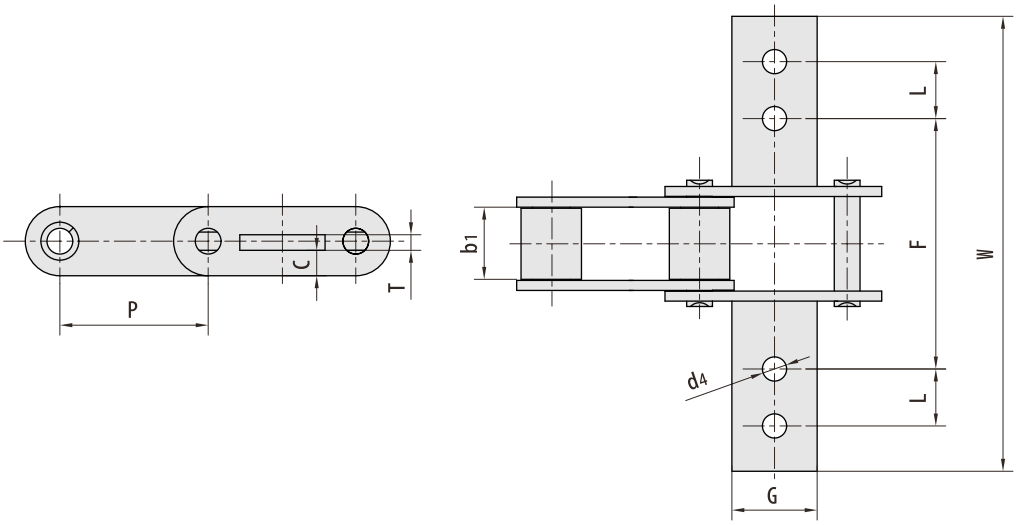

RBL chain number	P mm	b1 mm	G mm	L mm	F mm	W mm	T mm	C mm	d4 mm
CA550K8	41.40	19.81	23.8	15.9	69.9	127.0	4.3	7.1	6.75
CA550K9	41.40	19.81	23.8	15.9	69.9	127.0	4.3	7.9	6.75

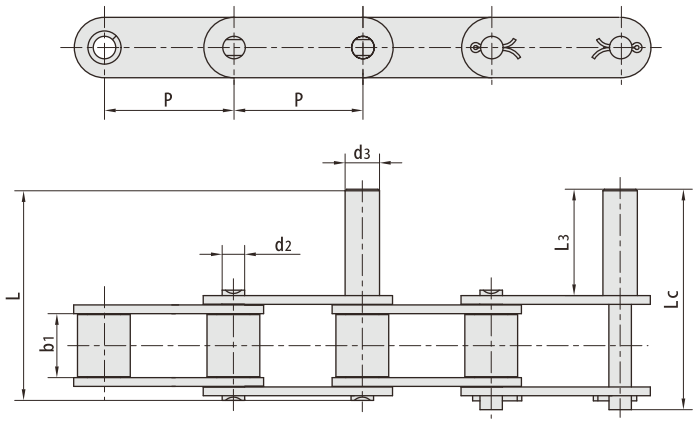

RBL chain number	P mm	b1 mm	d2 mm	d3 mm	L3 mm	L mm	Lc mm
CA550-D1	41.40	19.81	7.19	12.7	50.80	84.5	87.5
CA550-D2	41.40	19.81	7.19	7.2	31.75	65.4	68.4
CA550-D4	41.40	19.81	7.19	11.0	34.00	67.7	70.7
S62F6	41.19	25.40	9.00	12.7	40.00	84.8	87.8
S62F4	41.19	26.00	8.00	12.7	40.00	80.8	83.8
CA620-D1F1	42.01	24.51	7.19	12.0	44.45	84.8	88.2

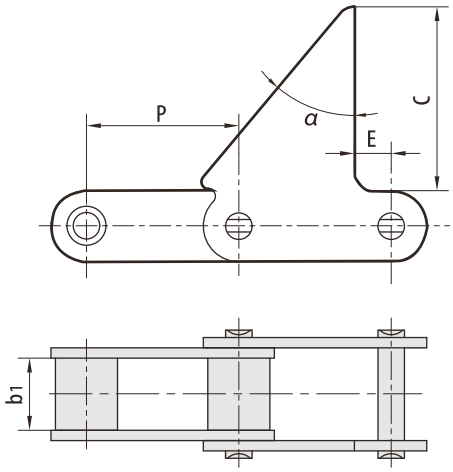

RBL chain number	P mm	b1 mm	C mm	*a*	E mm
CA550F6	41.4	19.81	50.0	40°	10
CA550F9	41.4	19.81	40.7	40°	10

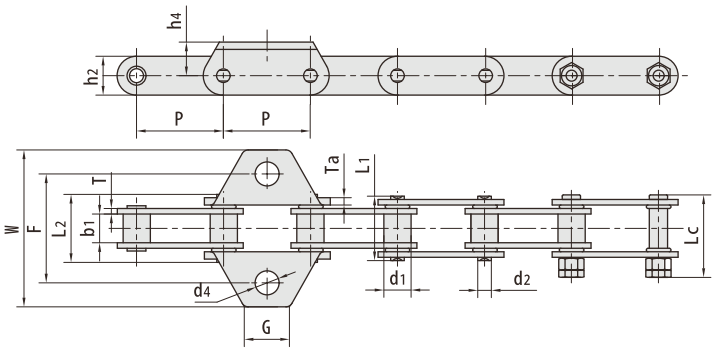

RBL chain number	Pitch	Roller diameter	Width between inner plates	Pin diameter	Pin length			Plate dimension		Tensile strength	Weight
	P	d1 max	b1 min	d2 max	L1 max	L2 max	Lc max	h2 max	T max	Q min	q
	mm	mm	mm	mm	mm	mm	mm	mm	mm	kN/LBF	kg/m
C2040H0R-WK1F1	25.4	7.95	7.85	3.96	20.5	20.5	26.0	12	2.03	14.1/3170	0.78
C2060F77OR	38.1	11.91	12.57	5.95	28.5	30.1	37.1	17	2.42	39.2/8813	1.41

RBL chain number	P	Ta	G	F	W	h4	d4
	mm	mm	mm	mm	mm	mm	mm
C2040H0R-W K1F1	25.4	2.03	37.4	62.0	80.0	9.5	7.0
C2060F77 0R	38.1	3.25	20.0	48.0	69.0	14.7	10.5

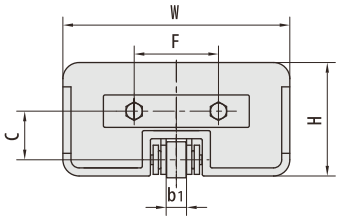

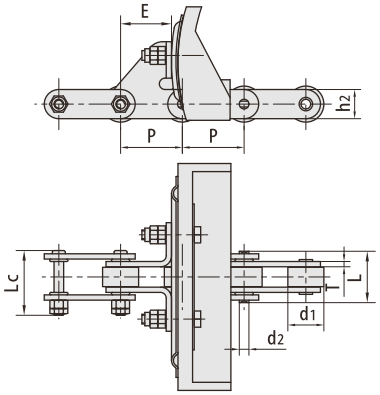

RBL chain number	Pitch	Roller diameter	Width between inner plates	Pin diameter	Pin length		Plate dimension		Attachment dimension					Tensile strength
	P	d1 max	b1 min	d2 max	L max	Lc max	h2 max	T max	C	W	F	H	E	Q min
	mm	mm	mm	mm	mm	mm	mm	mm	mm	mm	mm	mm	mm	kN/LBF
C2062H 0RSDF1	38.1	22.23	12.57	5.94	31.7	40.0	18.0	3.25	30.0	140.0	52.0	70.0	31.4	31.8/7150

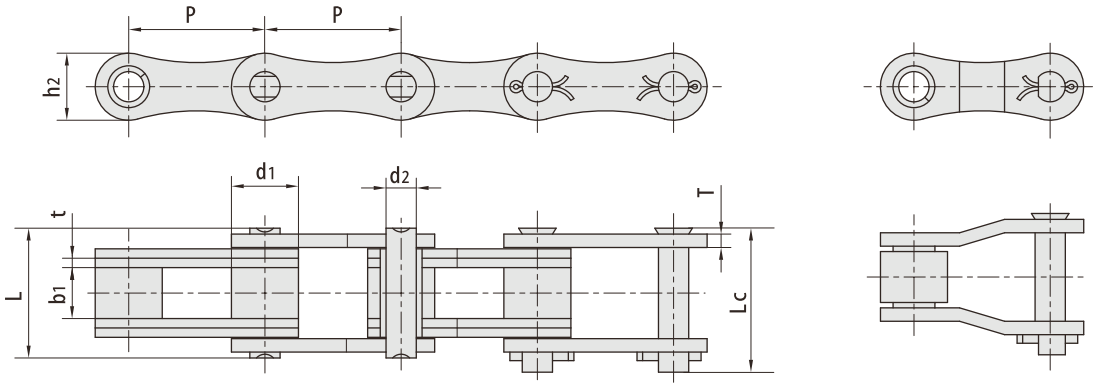

RBL chain number	Pitch	Roller diameter	Width between inner plates	Pin diameter	Pin length		Inner plate depth	Plate thickness	Tensile strength	Average Tensile strength	Weight
	P mm	d1 max mm	b1 min mm	d2 max mm	L max mm	Lc max mm	h2 mm	T mm	Q min kN/LBF	Q o kN	q kg/m
55VF1H2	41.4	17.9	22.23	8.22	45.3	48.4	21.4	3.0	60.0/11858	65.0	2.92
CA650F1	50.8	25.0	19.00	11.28	49.2	53.7	25.0	3.5/5.0	138.0/27273	140.0	4.36

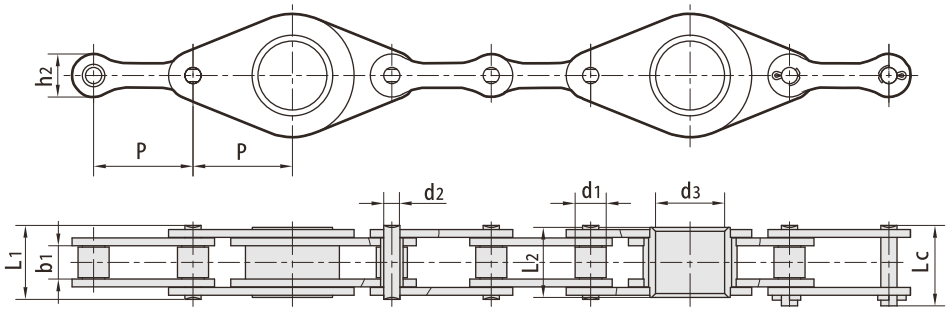

RBL chain number	Pitch	Roller diameter	Width between inner plates	Pin diameter	Hollow pin inner diameter	Pin length			Inner plate depth	Tensile strength	Average Tensile strength
	P mm	d1 max mm	b1 min mm	d2 max mm	d3 min mm	L1 max mm	L2 max mm	Lc max mm	h2 mm	Q min kN/LBF	Q o kN
216BF1	50.8	15.88	17.02	8.28	35.3	37.8	35.8	41.3	22.0	60.0/13636	70.8
CA650F3	50.8	19.05	19.05	9.53	35.3	40.4	37.8	44.7	25.0	90.0/20454	99.0

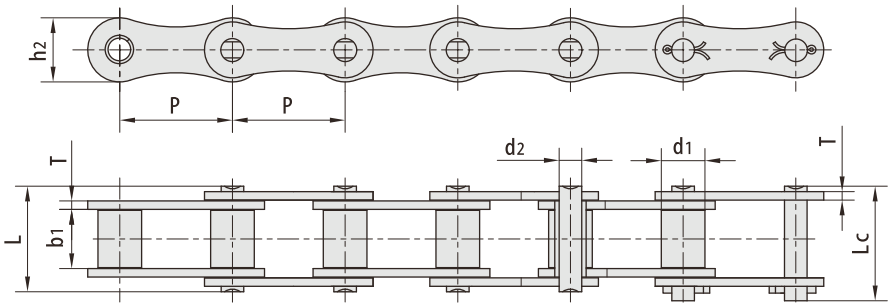

RBL chain number	Pitch	Roller diameter	Width between inner plates	Pin diameter	Pin length		Plate dimension		Tensile strength	Weight
	P mm	d1 max mm	b1 min mm	d2 max mm	L max mm	Lc max mm	h2 max mm	T max mm	Q min kN/LBF	q kg/m
P41.3	41.30	16.00	21.40	8.28	39.0	42.0	23.5	3.10	50/11363	2.27
CA620F4	42.01	19.05	27.90	10.19	44.9	46.5	25.0	3.00	45.0/10277	2.95
CA642	41.40	15.88	19.00	8.28	36.1	39.1	21.2	3.00	50.0/11363	1.98
CA645F1	41.40	17.78	22.23	8.22	41.3	44.4	21.4	1.33	71.7/16120	2.43
CA650	50.80	25.00	18.90	9.53	40.4	44.7	25.0	4.00	90.0/20454	3.49
CA650F2	50.80	20.00	18.90	9.53	40.4	44.7	25.0	4.00	90.0/20454	2.98
CA650F4	50.80	19.05	19.05	5.93	40.4	44.7	25.0	4.00	90.0/20454	2.85

RBL chain number	P mm	C mm	E mm	F mm	W mm	d4 mm
P41.3SD	41.3	25	25.0	60	79	6.4
P41.3SDF4	41.3	25	25.0	60	79	6.4
P41.35DF5	41.3	25	52.3	55	80	8.5
P41.3SDF6	41.3	25	25.0	60	79	8.4

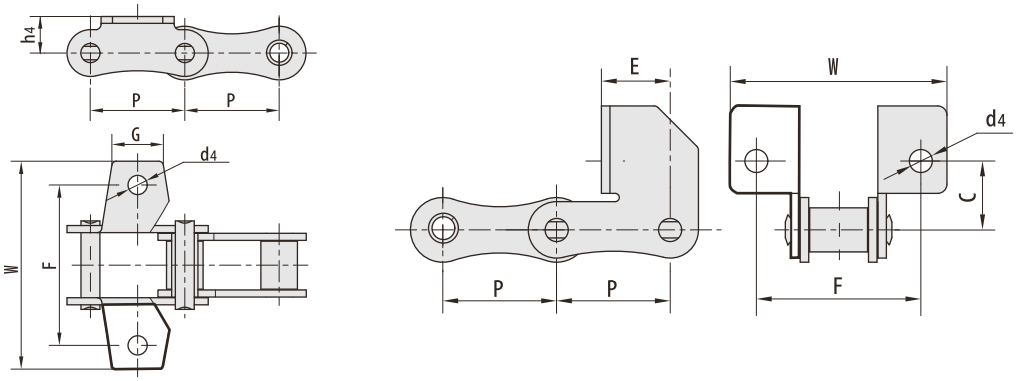

RBL chain number	P mm	G mm	F mm	W mm	h4 mm	d4 mm
P41.3K1	41.3	22.0	70.5	91.3	16.0	8.4

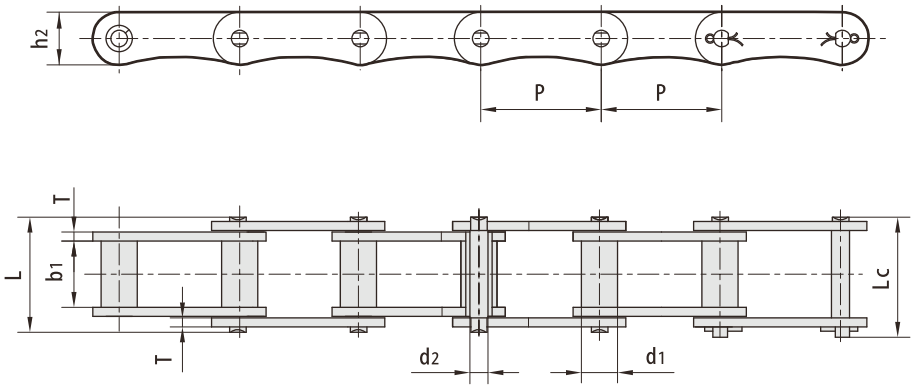

RBL chain number	Pitch	Roller diameter	Width between inner plates	Pin diameter	Pin length		Inner plate depth	Plate thickness	Tensile strength	Weight
	P mm	d1 max mm	b1 min mm	d2 max mm	L max mm	Lc max mm	h2 mm	T max mm	Q min kN/LBF	q kg/m
LV40	40	12.0	22.0	6.0	38.2	41.0	17.5	3.0	31.4/7136	1.53

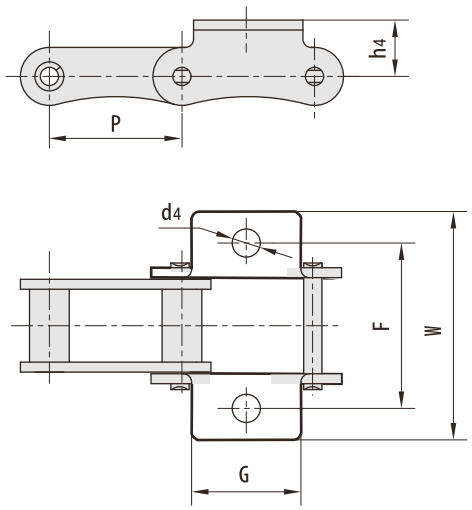

RBL chain number	P mm	G mm	F mm	W mm	h4 mm	d4 mm
LV40K1	40.0	33.0	50.0	69.0	17.0	8.5

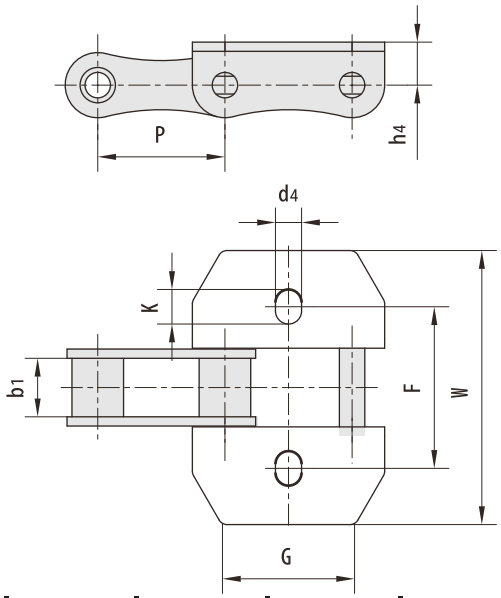

RBL chain number	P mm	b1 mm	G mm	F mm	W mm	h4 mm	d4 mm	K mm
CA642S103	41.4	19	40	53	89.6	14.0	8.5	11.25

S1 attachments S2 attachments

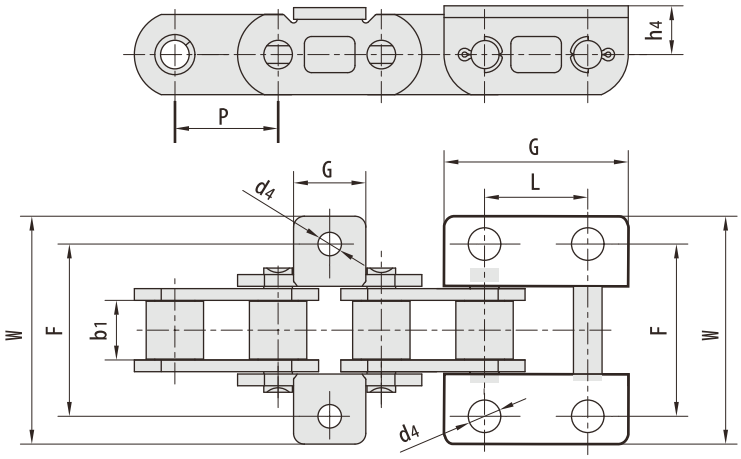

RBL chain number	P mm	b1 mm	L mm	G mm	F mm	W mm	h4 mm	d4 mm
CAE44151S1	28.575	16.200	-	20.0	47.0	61.0	13.0	6.50
CAE44151S2	28.575	16.200	28.58	51.0	47.0	62.4	13.5	9.00
P28F3	28.575	15.875	28.58	50.8	46.8	62.0	12.7	9.02

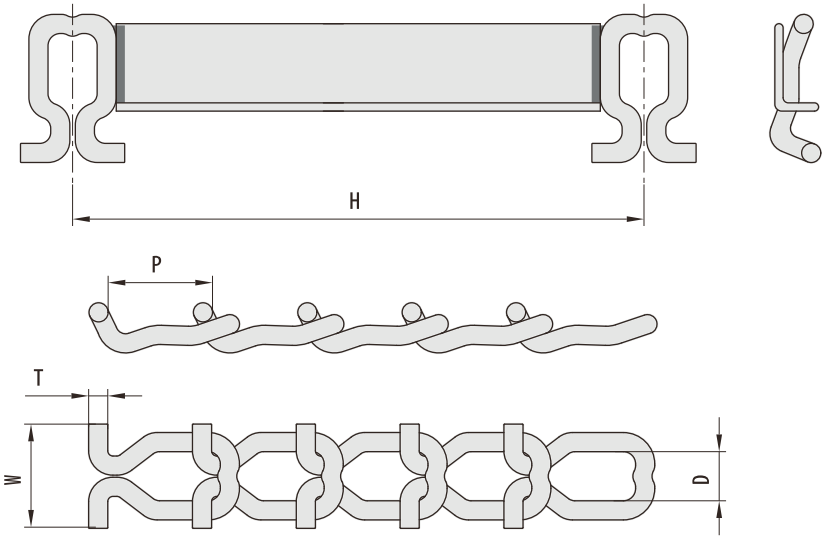

RBL chain number	Pitch P mm	inside width D mm	overall width W mm	thickness T mm	width center to center H mm	Average Tensile strength Q 0 kg/m
DH67 T-ROD	60.655	28.575	63.5	11.1	Available upon request	71.18/16000

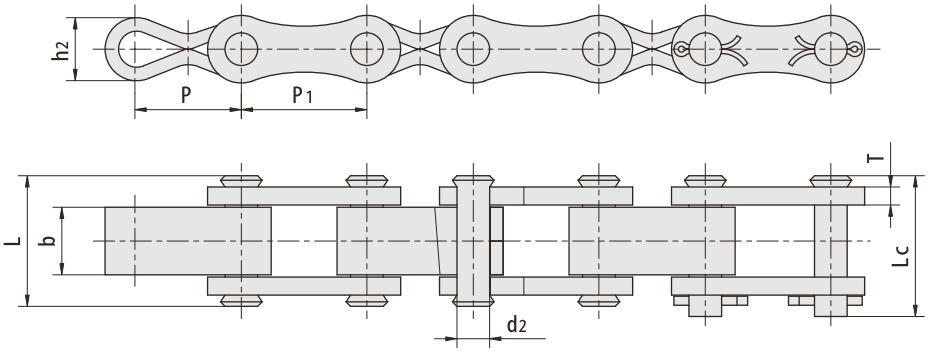

RBL chain number	Pitch		Pin diameter	Pin length		plate depth	Plate thickness	Attachment dimension	Tensile strength
	P mm	P1	d2 max mm	L max mm	Lc max mm	h2 mm	T max mm	b mm	Q min kN/LBF
P47.25/55.75	47.25	55.75	14.5	59.0	62.5	28.0	8.0	30.0	130.0/28225
P49.9/50.1	49.90	50.10	12.2	52.0	57.0	25.0	7.0	30.0	60.0/13488

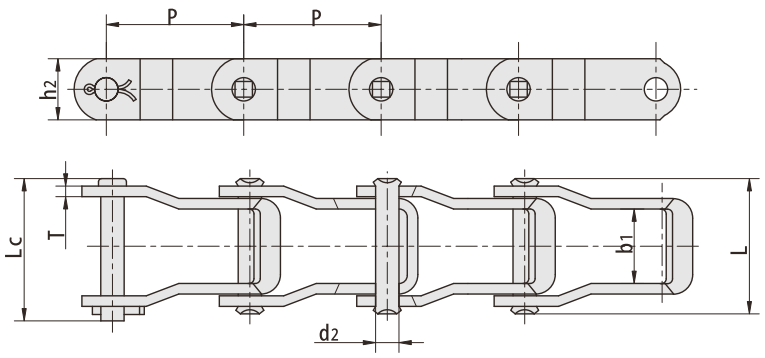

RBL chain number	Pitch	Width between inner plates	Pin diameter	Pin length		plate depth	Plate thickness	Tensile strength	Average Tensile strength	Weight
	P mm	b1 min mm	d2 max mm	L max mm	Lc max mm	h2 max mm	T max mm	Q min kN/LBF	Q 0 kg/m	q kg/m
662	42.27	22.9	7.19	41.2	44.2	18.8	3.2	37.80/8591	49.8	1.63
667H	58.75	25.4	7.94	43.7	46.7	22.2	3.2	42.30/9614	59.3	1.87
667X	57.15	26.6	11.10	50.2	55.0	23.8	4.3	66.70/15159	96.5	2.98
667XH	57.15	27.4	11.91	58.0	62.0	27.3	5.7	124.50/28295	138.6	4.34
667K	57.15	27.4	11.10	55.5	60.0	27.3	5.1	89.00/20227	123.2	3.91
667J	57.15	26.6	9.53	50.2	55.0	27.3	4.3	62.28/14155	84.1	2.81
667J	57.15	26.6	9.53	50.2	55.0	27.3	4.3	62.28/14155	84.1	2.81
88C	66.27	31.4	12.70	64.6	69.0	28.9	6.4	133.36/30309	160.5	5.17
308	78.10	32.5	15.88	72.6	78.0	38.1	8.0	227.00/51030	249.7	8.40

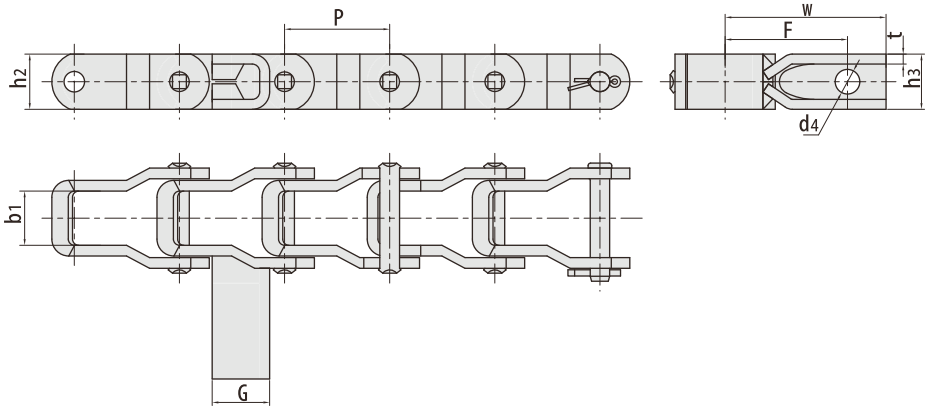

RBL chain number	Pitch	Width between inner plates	inner plate depth	Attachment dimension						Tensile strength
	P mm	b1 min mm	h2 max mm	G mm	F mm	W mm	h3 mm	d4 mm	t mm	Q min kN/LBF
662F7	42.27	22.9	18.8	23.1	49.2	64.7	22.2	9.9	4.0	37.80/8597
662HF2	42.27	21.8	22.2	23.1	49.2	64.7	22.2	9.9	4.0	50.80/11420

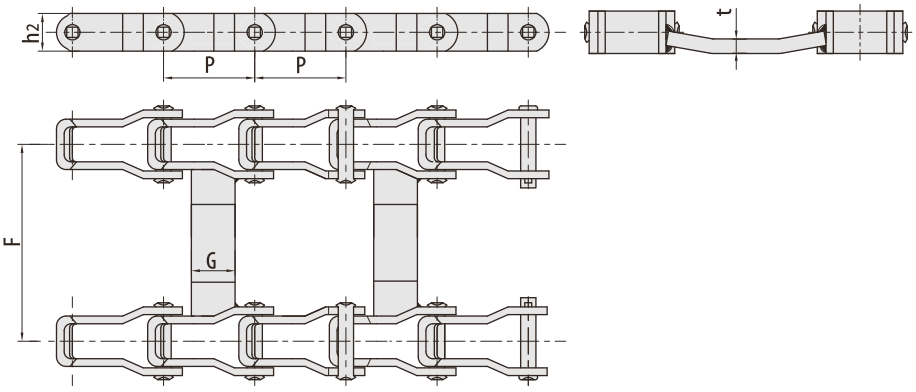

RBL chain number	Pitch	Width between inner plates	inner plate depth	Attachment dimension			Tensile strength
	P mm	b1 min mm	h2 max mm	G mm	F mm	t mm	Q min kN/LBF
667KF2SS	57.15	27.80	27.30	38.10	536.70	9.70	67.00/15062
667KF3SS	57.15	27.80	27.30	38.10	714.20	9.70	67.00/15062
88KF10	66.27	27.40	27.30	31.75	604.20	9.50	37.80/8497

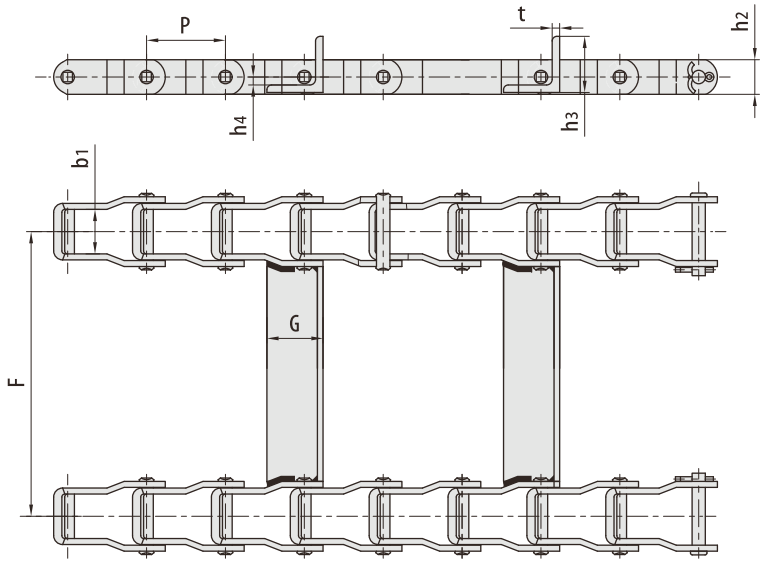

RBL chain number	Pitch	Width between inner plates	inner plate depth	Attachment dimension					Tensile strength
	P mm	b1 min mm	h2 max mm	G mm	F mm	h3 mm	d4 mm	t mm	Q min kN/LBF
662F4	42.27	22.9	18.8	30.0	539.75	3.0	30.00	5.25	37.80/8597
662HF3	42.27	21.8	22.2	30.0	487.35	3.0	30.00	7.10	50.80/11420

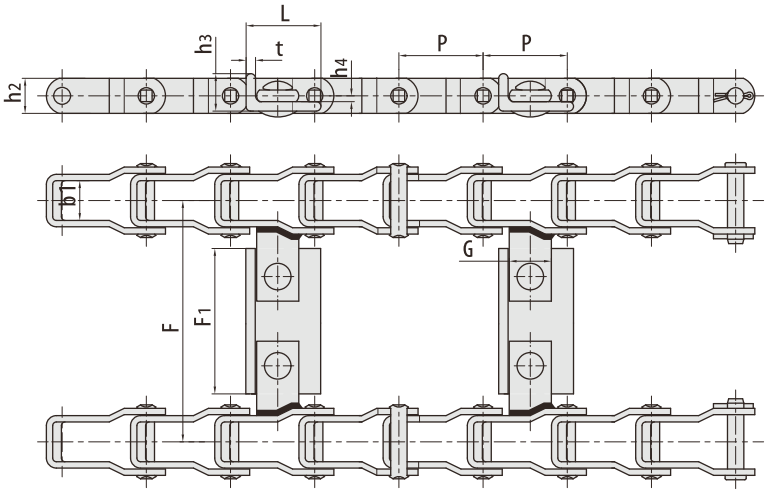

RBL chain number	Pitch	Width between inner plates	inner plate depth	Attachment dimension							Tensile strength
	P mm	b1 min mm	h2 max mm	G mm	F mm	F1 mm	L mm	t mm	h3 mm	h4 mm	Q min kN/LBF
667X-ASF10	57.15	27.00	23.80	28.60	814.40	749.30	50.80	4.80	25.40	4.00	66.70/14994
667X-ASF11	57.15	27.00	23.80	28.60	1450.90	1385.80	50.80	4.80	25.40	4.00	66.70/14994
667K-ASF9	57.15	27.80	27.00	31.75	1736.70	16.71.6	50.80	6.40	38.10	4.80	66.70/14994

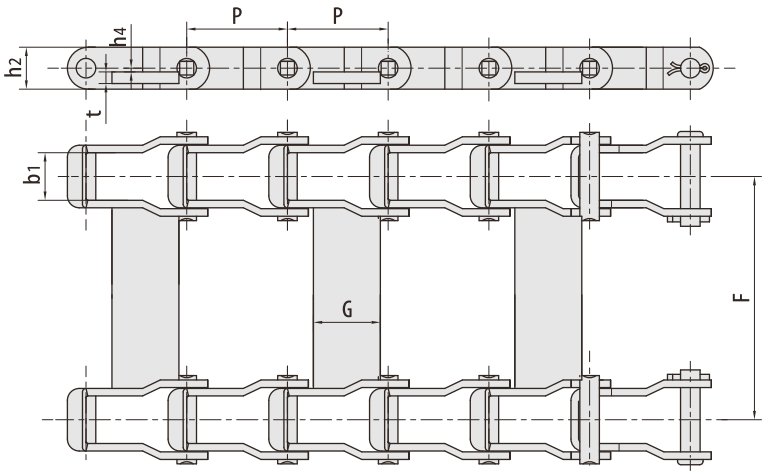

RBL chain number	Pitch	Width between inner plates	inner plate depth	Attachment dimension				Tensile strength
	P mm	b1 min mm	h2 max mm	G mm	F mm	t mm	h4 mm	Q min kN/LBF
662F1	42.3	26.6	18.8	19.0	343.5	5.00	4.40	37.80/85.97
667X-ASF3	57.15	26.6	23.8	38.0	514.4	7.0	0.00	66.70/14994

RBL chain number	C mm	F mm	d4 mm	T mm
667H	25.40	38.9	7.00	4.8
667X	29.50	39.7	7.00	4.8

With C1 attachments

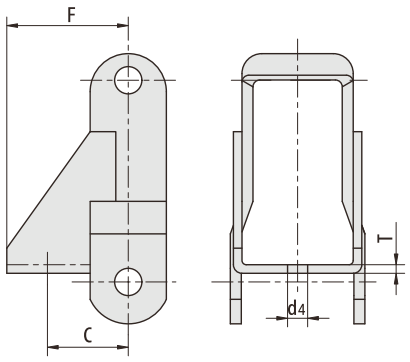

RBL chain number	C mm	F mm	W mm	d4 mm	T mm
662-ASF2	18.2	35.9	48.4	7.00	4.3
662-ASF3	23.8	34.9	48.0	6.75	4.8
662	24.2	35.9	48.4	7.00	4.3
667H-ASF9	28.6	51.6	65.9	8.33	6.4
667XH-KSF5	28.6	47.7	59.2	9.50	6.4
88C-KSF5	28.6	47.7	60.5	9.50	6.4
667H-ASF10	28.6	51.6	65.9	9.90	6.4
667X-ASF8	28.6	51.6	68.3	9.90	7.9
667H-ASF5	28.7	51.9	66.6	8.40	6.5
667X-ASF7	29.0	46.9	63.7	8.50	8.0
667H	29.7	51.6	66.6	8.50	6.4
667X	29.7	51.6	69.0	8.50	7.9
667-ASF1	29.7	51.6	69.0	8.50	4.3
667H-ASF2	29.7	51.6	66.6	8.50	6.4
667X-ASF14	30.0	55.0	73.0	10.30	8.0
667K-ASF6	31.5	50.5	71.5	11.90	10.0
667XH-AS	31.8	51.6	69.9	9.90	9.5
667XH-ASF3	31.8	51.6	69.9	11.90	9.5
88C-ASF2	31.8	51.6	71.4	9.90	9.5
88C-ASF3	31.8	51.6	71.4	11.50	9.5
667XH-ASF4	31.8	51.6	69.8	11.50	9.5
667K-ASF8	31.8	51.6	71.4	11.90	9.5
667XH-ASF7	31.8	51.6	69.9	9.92	9.6
667K	32.5	51.6	72.2	10.00	9.5
88K	32.5	51.6	72.2	10.00	9.5
88C	32.5	51.6	72.2	10.00	9.5

With AS attachments

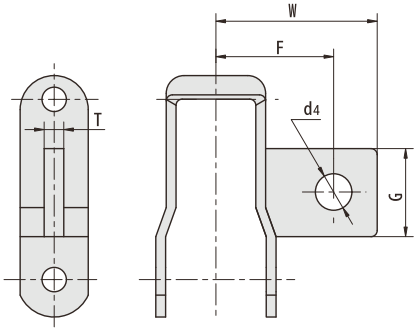

With A22 attachments

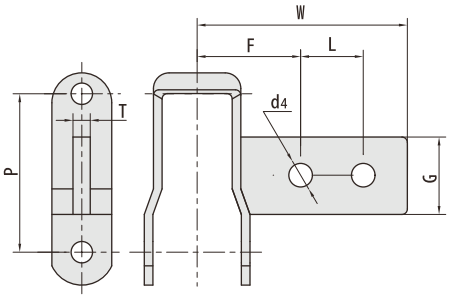

RBL chain number	P mm	G mm	F mm	L mm	W mm	d4 mm	T mm
662	42.27	24.2	34.9	15.9	60.3	6.75	4.3
88C	66.27	32.5	54.0	63.5	136.5	9.92	9.5
88K	66.27	32.5	54.0	63.5	136.5	9.92	9.5

With AN attachments

RBL chain number	P mm	G mm	F mm	T mm
662	42.27	24.2	47.6	4.3
667H	58.75	29.7	69.0	6.4
667X	57.15	29.7	68.3	7.9
667K	57.15	32.5	68.3	9.5
88K	66.27	32.5	68.3	9.5

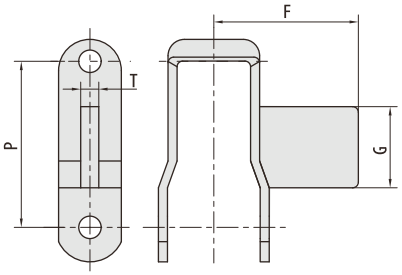

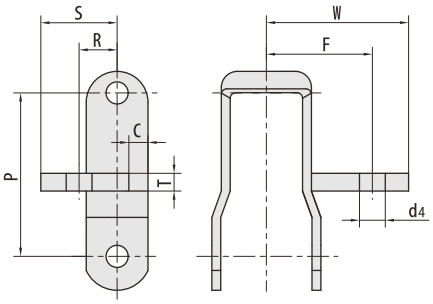

RBL chain number	RBL Attachment number	P mm	R mm	S mm	F mm	W mm	d4 mm	T mm	C mm
662	G28	42.27	20.6	33.3	31.8	43.7	6.75	6.4	4.8
662	G30	42.27	19.1	33.3	33.3	48.0	8.33	6.4	4.8
662	G30S	42.27	19.1	33.3	33.3	48.0	8.73	6.4	4.8
667H	G27S	58.75	19.1	31.8	51.6	65.9	9.92	6.4	6.4

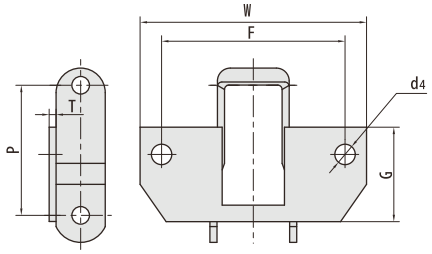

RBL chain number	RBL Attachment number	P mm	G mm	F mm	W mm	d4 mm	T mm
662	K1	42.27	34.9	62.7	82.6	6.75	3.2
662	K19	42.27	34.9	50.8	71.4	6.75	3.2
667X	K1	57.15	34.9	62.7	82.6	6.75	3.2
667H	K1	58.75	34.9	62.7	82.6	6.75	3.2

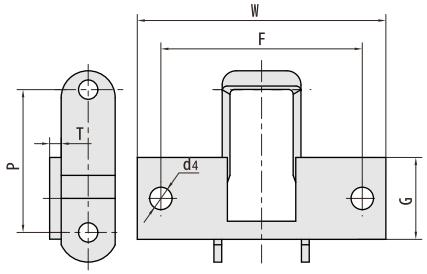

RBL chain number	RBL Attachment number	P mm	G mm	F mm	W mm	d4 mm	T mm
88K	K1C	66.27	47.6	95.3	127.0	9.92	4.8
88K	K1M	66.27	47.6	101.6	127.0	9.92	4.8
88K	K1P	66.27	47.6	96.8	127.0	9.92	4.8

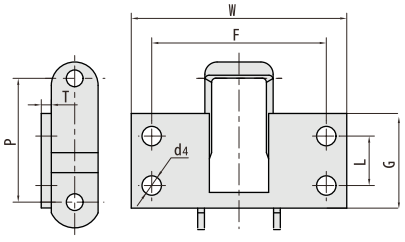

RBL chain number	RBL Attachment number	P mm	L mm	G mm	F mm	W mm	d4 mm	T mm
88K	K2C	66.27	31.8	57.2	106.4	127.0	9.92	4.8
88K	K2M	66.27	31.8	57.2	101.6	127.0	9.92	4.8
88K	K2P	66.27	31.8	57.2	92.0	127.0	9.92	4.8

Stainless steel chains are suitable for corrosive conditions involving food,chemicals pharmaceuticals,etc.and also suitable for high and low temperature conditions.

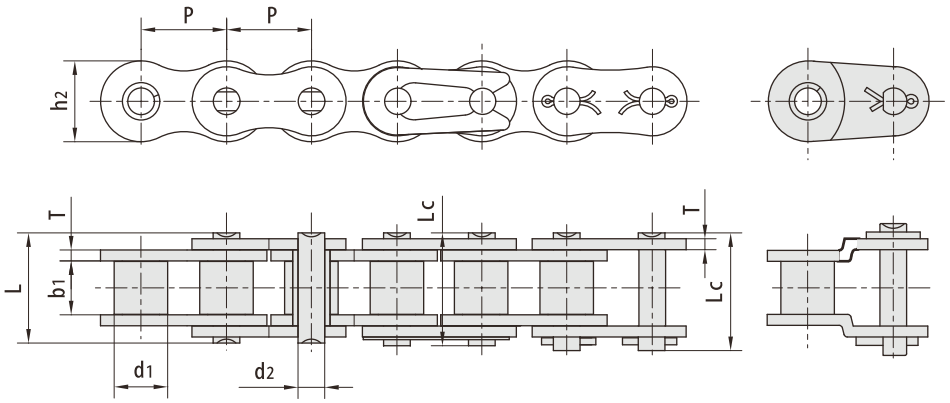

RBL chain number	Pitch	Roller diameter	Width between inner plates	Pin diameter	Pin length		Inner plate depth	Plate thickness	Breaking load	Weight
	P mm	d1 max mm	b1 min mm	d2 max mm	L max mm	Lc max mm	h2 max mm	t/T max mm	Q kN/LBF	q kg/m
*04CSS-1	6.350	3.30	3.18	2.31	7.90	8.40	6.00	0.80	2.5/568	0.15
*06CSS-1	9.525	5.08	4.77	3.58	12.40	13.17	9.00	1.30	5.5/1250	0.33
08ASS-1	12.700	7.95	7.85	3.96	16.60	17.80	12.00	1.50	9.6/2182	0.63
41SS-1	12.700	7.77	6.25	3.58	13.75	15.00	9.91	1.30	6.0/1360	0.46
10ASS-1	15.875	10.16	9.40	5.08	20.70	22.20	15.09	2.03	15.2/3455	1.03
12ASS-1	19.050	11.91	12.57	5.94	25.90	27.70	18.00	2.42	21.7/4932	1.51
16ASS-1	25.400	15.88	15.75	7.92	32.70	35.00	24.00	3.25	38.9/8841	2.62
20ASS-1	31.750	19.05	18.90	9.53	40.40	44.70	30.00	4.00	60.0/13636	3.94
24ASS-1	38.100	22.23	25.22	11.10	50.30	54.30	35.70	4.80	75.0/16861	5.72
28ASS-1	44.450	25.40	25.22	12.70	54.40	59.00	41.0	5.60	102.0/22931	7.70
32ASS-1	50.800	28.58	31.55	14.27	64.80	69.60	47.80	6.40	133.8/30079	10.20
04BSS-1	6.000	4.00	2.80	1.85	6.80	7.80	5.00	0.60	2.0/455	0.11
05BSS-1	8.000	5.00	3.00	2.31	8.20	8.90	7.10	0.80	3.5/795	0.20
#06BSS-1	9.525	6.35	5.72	3.28	13.15	14.10	8.20	1.30	6.2/1409	0.41
08BSS-1	12.700	8.51	7.75	4.45	16.70	18.20	11.80	1.60	12.0/2727	0.70
10BSS-1	15.875	10.16	9.65	5.08	19.50	20.90	14.70	1.70	14.5/3295	0.94
12BSS-1	19.050	12.07	11.68	5.72	22.50	24.20	16.00	1.85	18.5/4205	1.16
16BSS-1	25.400	15.88	17.02	8.28	36.10	37.40	21.00	4.15/3.1	40.0/9091	2.73
20BSS-1	31.750	19.05	19.56	10.19	41.30	45.00	26.40	4.5/3.5	59.0/13409	3.73
24BSS-1	38.100	25.40	25.40	14.63	53.40	57.80	33.20	6.0/4.8	104.0/25454	7.20
28BSS-1	44.450	27.94	30.99	15.90	65.10	69.50	36.70	7.5/6.0	120.0/26977	9.21
32BSS-1	50.800	29.21	30.99	17.81	66.00	71.00	42.00	7.0/6.0	150.0/34090	10.22

*Bush chain:d1 in the table indicates the external diameter of the bush

#Straight side plates

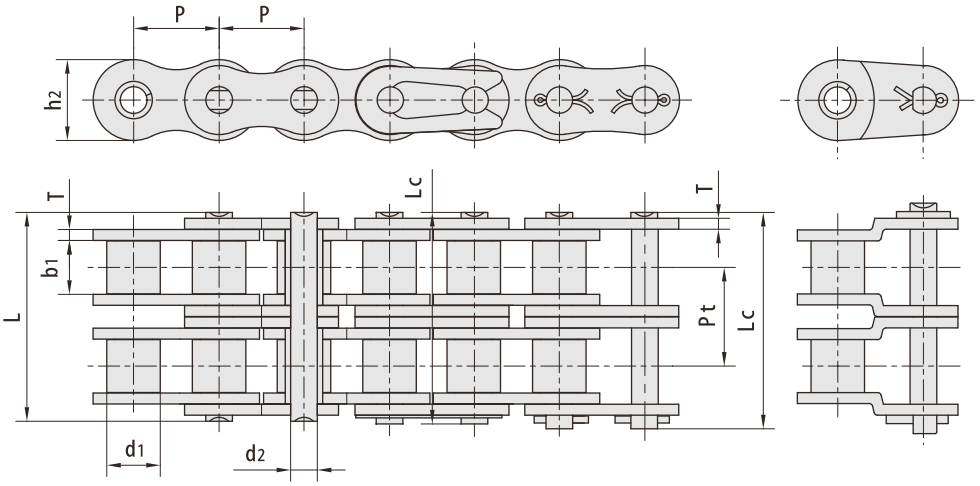

RBL chain number	Pitch	Roller diameter	Width between inner plates	Pin diameter	Pin length		Inner plate depth	Plate thickness	Transverse pitch	Breaking load	Weight
	P mm	d1 max mm	b1 min mm	d2 max mm	L max mm	Lc max mm	h2 max mm	t/T max mm	Pt mm	Q kN/LBF	q kg/m
*04CSS-2	6.350	3.30	3.18	2.31	14.50	15.00	6.00	0.80	6.40	5.0/1124	0.28
*06CSS-2	9.525	5.08	4.77	3.58	22.50	23.30	9.00	1.30	10.13	11.0/2473	0.70
08ASS-2	12.700	7.95	7.85	3.96	31.00	32.20	12.00	1.50	14.38	19.2/4316	1.30
41SS-2	12.700	7.77	6.25	3.53	25.70	26.90	9.91	1.30	11.95	12.0/2698	0.91
10ASS-2	15.875	10.16	9.40	5.08	38.90	40.40	15.09	2.03	18.11	30.4/6834	2.18
12ASS-2	19.050	11.91	12.57	5.94	48.80	50.50	18.00	2.42	22.78	43.4/9757	2.92
16ASS-2	25.400	15.88	15.75	7.92	62.70	64.30	24.00	3.25	29.29	77.8/17490	5.15
20ASS-2	31.750	19.05	18.90	9.53	76.40	80.50	30.00	4.00	35.76	120.0/26977	7.80
24ASS-2	38.100	22.23	25.22	11.10	95.80	99.70	35.70	4.80	45.44	150.0/33720	11.70
28ASS-2	44.450	25.40	25.22	12.70	103.30	107.90	41.00	5.60	48.87	204.0/45859	15.14
32ASS-2	50.800	28.58	31.55	14.27	123.30	128.10	47.80	6.40	58.55	267.6/60156	20.14
04BSS-2	6.000	4.00	2.80	1.85	12.30	13.30	5.00	0.60	5.50	4.0/899	0.22
05BSS-2	8.000	5.00	3.00	2.31	13.90	14.50	7.10	0.80	5.64	6.2/1394	0.37
#06BSS-2	9.525	6.35	5.72	3.28	23.40	24.40	8.20	1.30	10.24	11.8/2653	0.87
08BSS-2	12.700	8.51	7.75	4.45	31.00	32.20	11.80	1.60	13.92	21.0/4721	1.40
10BSS-2	15.875	10.16	9.65	5.08	36.10	37.50	14.70	1.70	16.59	29.1/6542	1.96
12BSS-2	19.050	12.07	11.68	5.72	42.00	43.60	16.00	1.85	19.46	37.0/8318	2.46
16BSS-2	25.400	15.88	17.02	8.28	68.00	71.00	21.00	4.15/3.10	31.88	70.7/15894	5.42
20BSS-2	31.750	19.05	19.56	10.19	77.80	81.50	26.40	4.50/3.50	36.45	105.6/23740	7.87
24BSS-2	38.100	25.40	25.40	14.63	101.70	106.20	33.20	6.00/4.80	48.36	182.0/40915	12.43
28BSS-2	44.450	27.94	30.99	15.90	124.60	129.10	36.70	7.50/6.00	59.56	216.0/48557	16.60
32BSS-2	50.800	29.21	30.99	17.81	124.60	129.60	42.00	7.00/6.00	58.55	270.0/60698	20.34

*Bush chain:d1 in the table indicates the external diameter of the bush

#Straight side plates

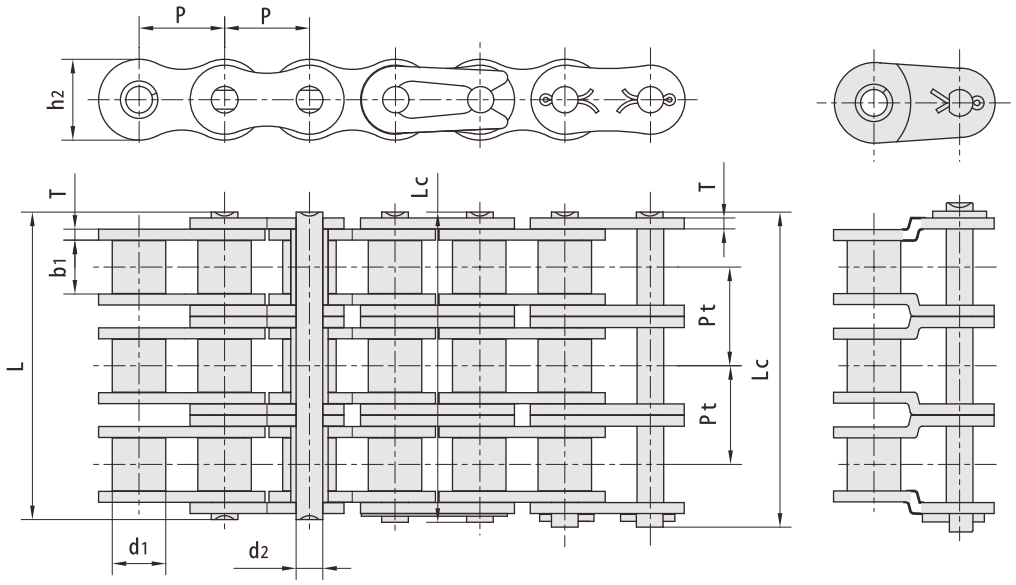

RBL chain number	Pitch	Roller diameter	Width between inner plates	Pin diameter	Pin length		Inner plate depth	Plate thickness	Transverse pitch	Breaking load	Weight
	P mm	d1 max mm	b1 min mm	d2 max mm	L max mm	Lc max mm	h2 max mm	t/T max mm	Pt mm	Q kN/LBF	q kg/m
*04CSS-3	6.350	3.30	3.18	2.31	21.00	21.50	6.00	0.80	6.40	7.5/1686	0.44
*06CSS-3	9.525	5.08	4.77	3.58	32.70	33.50	9.00	1.30	10.13	16.5/3709	1.04
08ASS-3	12.700	7.95	7.85	3.96	45.40	46.60	12.00	1.50	14.38	28.8/6474	1.97
10ASS-3	15.875	10.16	9.40	5.08	57.00	58.50	15.09	2.03	18.11	45.6/1025	3.24
12ASS-3	19.050	11.91	12.57	5.94	71.50	73.30	18.00	2.42	22.78	65.1/14635	4.54
16ASS-3	25.400	15.88	15.75	7.92	91.70	95.10	24.00	3.25	29.29	116.7/26235	7.89
20ASS-3	31.750	19.05	18.90	9.53	112.20	116.30	30.00	4.00	35.76	180.0/40466	11.76
24ASS-3	38.100	22.23	25.22	11.10	141.40	145.20	35.70	4.80	45.44	225.0/50580	17.53
28ASS-3	44.450	25.40	25.22	12.70	152.20	156.80	41.00	5.60	48.87	306.0/68789	22.20
32ASS-3	50.800	28.58	31.55	14.27	181.80	186.60	47.80	6.40	58.55	401.4/90238	30.02
05BSS-3	8.000	5.00	3.00	2.31	19.50	20.20	7.10	0.80	5.64	8.8/1978	0.57
#06BSS-3	9.525	6.35	5.72	3.28	33.50	34.60	8.20	1.30	10.24	17.3/3889	1.09
08BSS-3	12.700	8.51	7.75	4.45	45.10	46.10	11.80	1.60	13.92	30.0/6744	2.08
10BSS-3	15.875	10.16	9.65	5.08	52.70	54.10	14.70	1.70	16.59	43.6/9802	2.92
12BSS-3	19.050	12.07	11.68	5.72	61.50	63.10	16.00	1.85	19.46	55.5/12477	3.71
16BSS-3	25.400	15.88	17.02	8.28	99.80	102.90	21.00	4.15/3.10	31.88	106.7/23830	8.13
20BSS-3	31.750	19.05	19.56	10.19	114.20	117.90	26.40	4.50/3.50	36.45	155.3/34913	11.80
24BSS-3	38.100	25.40	25.40	14.63	150.10	154.60	33.20	6.00/4.80	48.36	276.3/62115	20.10
28BSS-3	44.450	27.94	30.99	15.90	184.20	188.70	36.70	7.50/6.00	59.56	318.0/71486	26.90
32BSS-3	50.800	29.21	30.99	17.81	183.20	188.20	42.00	7.00/6.00	58.55	402.0/90370	31.56

*Bush chain:d1 in the table indicates the external diameter of the bush

#Straight side plates

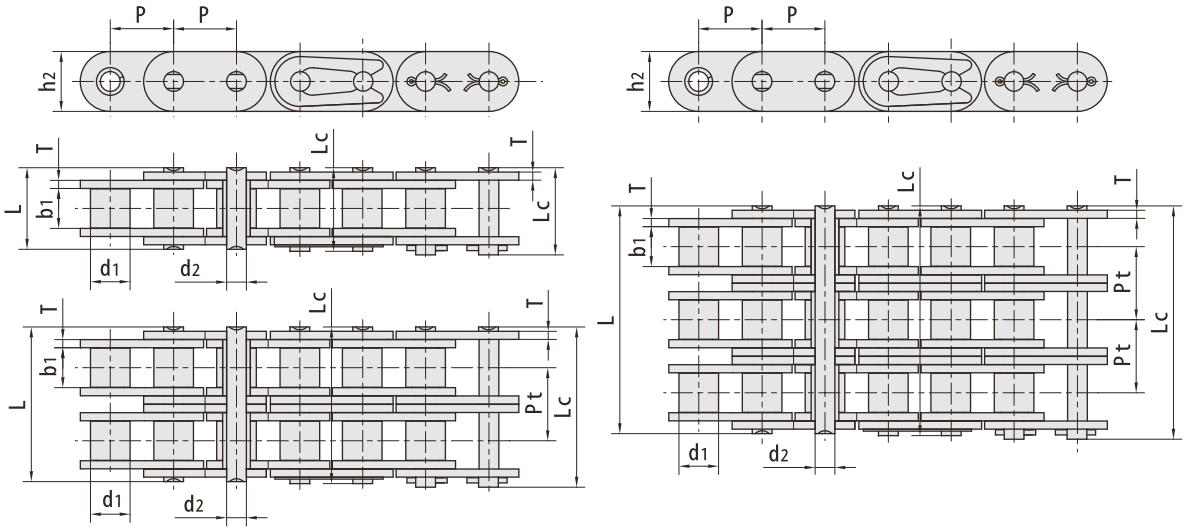

RBL chain number	Pitch P mm	Roller diameter d1 max mm	Width between inner plates b1 min mm	Pin diameter d2 max mm	Pin length L max mm	Pin length Lc max mm	Inner plate depth h2 max mm	Plate thickness t/T max mm	Transverse pitch Pt mm	Breaking load Q kN/LBF	Weight q kg/m
C08ASS-1	12.700	7.95	7.85	3.96	16.60	17.80	12.00	1.50	-	9.6/2158	0.75
C10ASS-1	15.875	10.16	9.40	5.08	20.70	22.20	15.09	2.03	-	15.2/3417	1.21
C12ASS-1	19.050	11.91	12.57	5.94	25.90	27.70	18.00	2.42	-	21.7/4878	1.79
C16ASS-1	25.400	15.88	15.75	7.92	32.70	36.50	24.00	3.25	-	38.9/8745	3.09
C20ASS-1	31.750	19.05	18.90	9.53	40.40	44.70	30.00	4.00	-	60.0/13489	4.55
C24ASS-1	38.100	22.23	25.22	11.10	50.30	54.30	35.70	4.80	-	75.0/16861	6.86
C28ASS-1	44.450	25.40	25.22	12.70	54.40	59.00	41.00	5.60	-	102.0/22931	8.49
C32ASS-1	50.800	28.58	31.55	14.27	64.80	69.60	47.80	6.40	-	133.8/30079	11.50
C08ASS-2	12.700	7.95	7.85	3.96	31.00	32.20	12.00	1.50	14.38	19.2/4316	1.50
C10ASS-2	15.875	10.16	9.40	5.08	38.90	40.40	15.09	2.03	18.11	30.4/6834	2.40
C12ASS-2	19.050	11.91	12.57	5.94	48.80	50.50	18.00	2.42	22.78	43.4/9757	3.62
C16ASS-2	25.400	15.88	15.75	7.92	62.70	65.80	24.00	3.25	29.29	77.8/17490	6.12
C20ASS-2	31.750	19.05	18.90	9.53	76.40	80.50	30.00	4.00	35.76	120.0/26977	9.10
C24ASS-2	38.100	22.23	25.22	11.10	95.80	99.70	35.70	4.80	45.44	150.0/33721	13.60
C28ASS-2	44.450	25.40	25.22	12.70	103.30	107.90	41.00	5.60	48.87	204.0/45861	16.86
C32ASS-2	50.800	28.58	31.55	14.27	123.30	128.10	47.80	6.40	58.55	267.6/60159	22.90
C08ASS-3	12.700	7.95	7.85	3.96	45.40	46.60	12.00	1.50	14.38	28.8/6474	2.30
C10ASS-3	15.875	10.16	9.40	5.08	57.00	58.50	15.09	2.03	18.11	45.6/10251	3.30
C12ASS-3	19.050	11.91	12.57	5.94	71.50	73.30	18.00	2.42	22.78	65.1/14635	5.40
C16ASS-3	25.400	15.88	15.75	7.92	91.70	95.10	24.00	3.25	29.29	116.7/26235	9.10
C20ASS-3	31.750	19.05	18.90	9.53	112.20	116.30	30.00	4.00	35.76	180.0/40466	13.56
C24ASS-3	38.100	22.23	25.22	11.10	141.40	145.20	35.70	4.80	45.44	225.0/50580	20.43
C28ASS-3	44.450	25.40	25.22	12.70	152.20	156.80	41.00	5.60	48.87	306.0/68789	25.23
C32ASS-3	50.800	28.58	31.55	14.27	181.80	186.60	47.80	6.40	58.55	401.4/90238	34.12

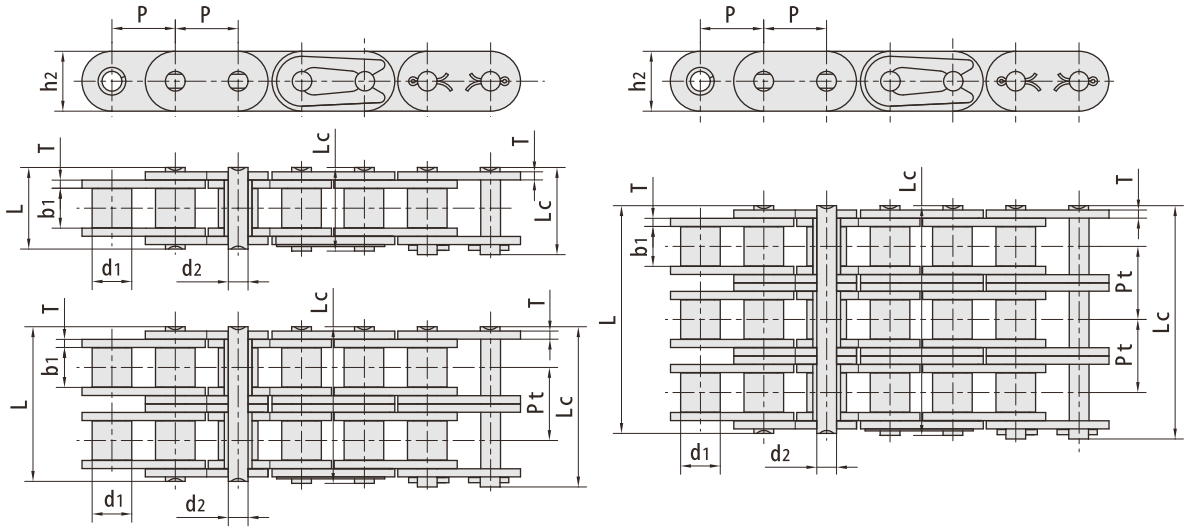

RBL chain number	Pitch	Roller diameter	Width between inner plates	Pin diameter	Pin length		Inner plate depth	Plate thickness	Transverse pitch	Breaking load	Weight
	P mm	d1 max mm	b1 min mm	d2 max mm	L max mm	Lc max mm	h2 max mm	t/T max mm	Pt mm	Q kN/LBF	q kg/m
C08BSS-1	12.700	8.51	7.75	4.45	16.70	18.20	11.80	1.60	-	12.0/2698	0.80
C10BSS-1	15.875	10.16	9.65	5.08	19.50	20.90	14.70	1.70	-	14.5/3260	1.07
C12BSS-1	19.050	12.07	11.68	5.72	22.50	24.20	16.00	1.85	-	18.5/4159	1.32
C16BSS-1	25.400	15.88	17.02	8.28	36.10	39.10	21.00	4.15/3.10	-	40.0/8992	2.92
C20BSS-1	31.750	19.05	19.56	10.19	41.30	45.00	26.40	4.50/3.50	-	59.0/13264	4.41
C24BSS-1	38.100	25.40	25.40	14.63	53.40	57.80	33.20	6.00/4.80	-	104.0/23380	7.47
C28BSS-1	44.450	27.94	30.99	15.90	65.10	69.50	36.70	7.50/6.00	-	120.0/26976	9.90
C32BSS-1	50.800	29.21	30.99	17.81	66.00	71.00	42.00	7.00/6.00	-	150.0/33720	10.45
C08BSS-2	12.700	8.51	7.75	4.45	31.00	32.20	11.80	1.60	13.92	21.0/4721	1.58
C10BSS-2	15.875	10.16	9.65	5.08	36.10	37.50	14.70	1.70	16.59	29.1/16542	2.49
C12BSS-2	19.050	12.07	11.68	5.72	42.00	43.60	16.00	1.85	19.46	37.0/8318	2.62
C16BSS-2	25.400	15.88	17.02	8.28	68.00	71.00	21.00	4.15/3.10	31.88	70.7/15894	5.76
C20BSS-2	31.750	19.05	19.56	10.19	77.80	81.50	26.40	4.50/3.50	36.45	105.6/23740	8.72
C24BSS-2	38.100	25.40	25.40	14.63	101.70	106.20	33.20	6.00/4.80	48.36	182.0/40915	14.98
C28BSS-2	44.450	27.94	30.99	15.90	124.60	129.10	36.70	7.50/6.00	59.56	216.0/48557	19.82
C32BSS-2	50.800	29.21	30.99	17.81	124.60	129.60	42.00	7.00/6.00	58.55	270.0/60696	20.94
C08BSS-3	12.700	8.51	7.75	4.45	45.10	46.10	11.80	1.60	13.92	30.0/6744	2.36
C10BSS-3	15.875	10.16	9.65	5.08	52.70	54.10	14.70	1.70	16.59	43.6/9802	2.92
C12BSS-3	19.050	12.07	11.68	5.72	61.50	63.10	16.00	1.85	19.46	55.5/12477	3.89
C16BSS-3	25.400	15.88	17.02	8.28	99.80	102.90	21.00	4.15/3.10	31.88	106.7/23830	8.62
C20BSS-3	31.750	19.05	19.56	10.19	114.20	117.90	26.40	4.50/3.50	36.45	155.3/34913	13.03
C24BSS-3	38.100	25.40	25.40	14.63	150.10	154.60	33.20	6.00/4.80	48.36	276.3/62115	22.10
C28BSS-3	44.450	27.94	30.99	15.90	184.20	188.70	36.70	7.50/6.00	59.56	318.0/71486	29.64
C32BSS-3	50.800	29.21	30.99	17.81	183.20	188.20	42.00	7.00/6.00	58.55	402.0/90370	31.27

A1

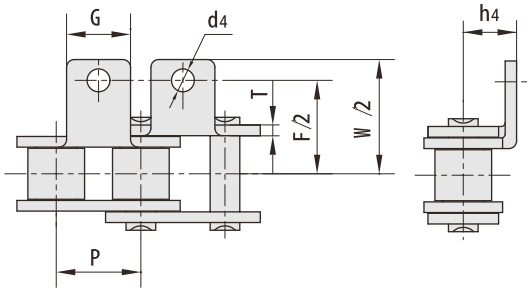

K1

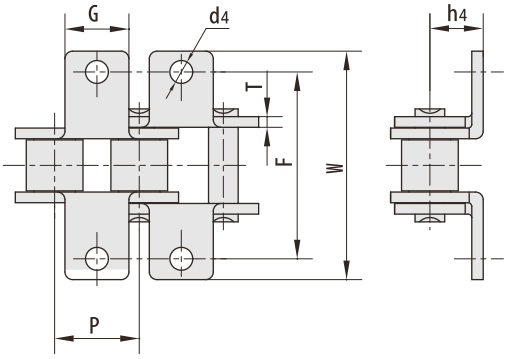

RBL chain number	P mm	G mm	F mm	W mm	T mm	h4 mm	d4 mm
06CSS	9.525	7.90	19.00	28.60	1.30	6.35	3.40
08ASS	12.700	9.50	25.40	35.20	1.50	7.90	3.40
10ASS	15.875	12.70	31.75	46.20	2.03	10.30	5.50
12ASS	19.050	15.90	38.10	55.60	2.42	11.90	5.50
16ASS	25.400	19.10	50.80	64.80	3.25	15.90	6.80
20ASS	31.750	25.40	63.50	89.80	4.00	19.80	9.20
24ASS	38.100	28.60	76.20	108.50	4.80	23.00	9.80
28ASS	44.450	34.90	88.90	123.00	5.60	28.60	11.40
32ASS	50.800	38.10	101.60	142.80	6.40	31.75	13.10
#06BSS	9.525	8.00	19.04	27.00	1.30	6.50	3.50
08BSS	12.700	9.50	25.40	36.40	1.60	8.90	4.50
10BSS	15.875	14.30	31.75	44.60	1.70	10.31	5.30
12BSS	19.050	16.00	38.10	52.40	1.85	13.46	6.40
16BSS	25.400	19.10	50.80	72.60	3.10	15.88	6.40
20BSS	31.750	35.00	63.50	100.50	3.50	19.80	9.00
24BSS	38.100	30.00	76.20	108.40	4.80	26.67	10.50
28BSS	44.450	35.00	88.90	123.00	6.00	28.58	13.10
32BSS	50.800	38.10	101.60	142.80	6.00	31.75	13.10

#Straight side plates

SA1/M1 (one side)

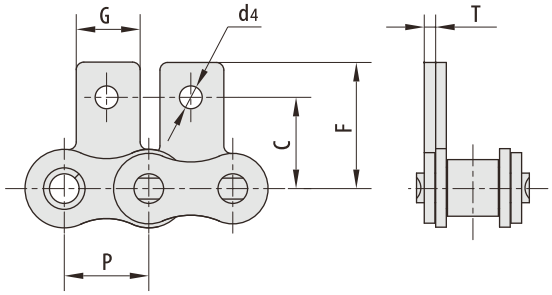

SK1/M1 (both sides)

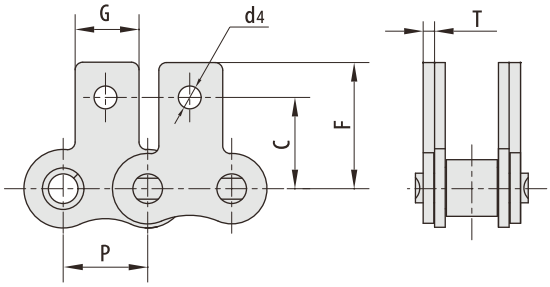

RBL chain number	P mm	G mm	C mm	F mm	T mm	d4 mm
06CSS	9.525	7.90	9.50	14.55	1.30	3.40
08ASS	12.700	9.50	12.70	19.05	1.50	3.40
10ASS	15.875	12.70	15.90	25.25	2.03	5.50
12ASS	19.050	15.90	18.30	29.33	2.42	5.50
16ASS	25.400	19.10	24.60	34.70	3.25	6.80
20ASS	31.750	25.40	31.80	43.30	4.00	9.20
24ASS	38.100	28.60	36.50	51.60	4.80	9.80
28ASS	44.450	34.90	44.50	62.00	5.60	11.40
32ASS	50.800	38.10	50.80	69.85	6.40	13.10
#06BSS	9.525	8.00	9.52	13.50	1.30	3.50
08BSS	12.700	9.50	13.35	18.90	1.60	4.50
10BSS	15.875	14.30	16.50	22.95	1.70	5.30
12BSS	19.050	16.00	21.45	28.60	1.85	6.40
16BSS	25.400	19.10	23.15	34.00	3.10	6.40
20BSS	31.750	35.00	30.50	45.70	3.50	9.00
24BSS	38.100	30.00	36.00	61.50	4.80	10.50

#Straight side plates

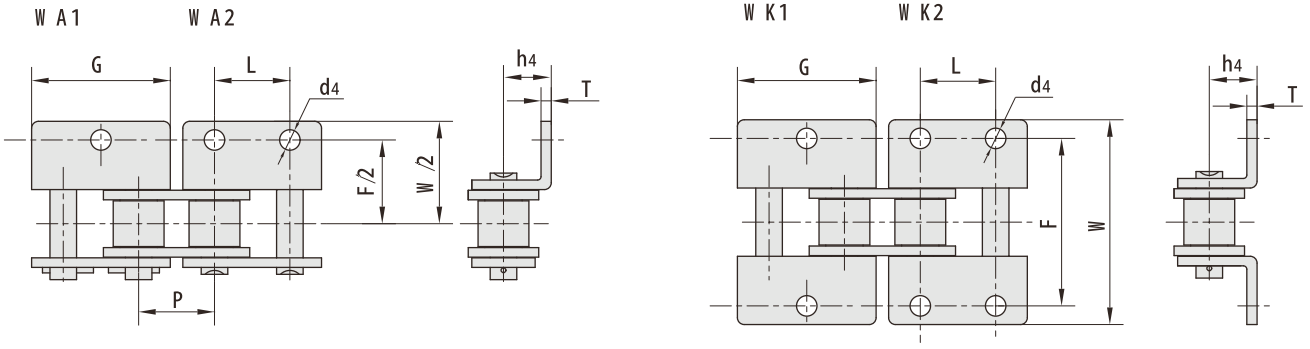

RBL chain number	P mm	G mm	L mm	F mm	W mm	T mm	h4 mm	d4 mm
06CSS	9.525	17.20	9.525	19.00	28.60	1.30	6.35	2.80
08ASS	12.700	23.00	12.700	25.40	35.60	1.50	7.90	3.40
10ASS	15.875	28.80	15.875	31.75	46.80	2.03	10.30	5.50
12ASS	19.050	34.65	19.050	38.10	56.40	2.42	11.90	5.50
16ASS	25.400	45.90	25.400	50.80	73.20	3.25	15.90	6.80
20ASS	31.750	57.65	31.750	63.50	89.80	4.00	19.80	9.20
24ASS	38.100	69.30	38.100	76.20	108.80	4.80	23.00	9.80
28ASS	44.450	80.45	44.450	88.90	123.00	5.60	28.60	11.40
32ASS	50.800	92.00	50.800	101.60	142.80	6.40	31.75	13.10
#06BSS	9.525	17.72	9.525	19.04	27.00	1.30	6.50	3.50
08BSS	12.700	24.00	12.700	25.40	36.40	1.60	8.90	4.30
10BSS	15.875	29.58	15.850	31.80	44.60	1.70	10.31	5.30
12BSS	19.050	34.05	19.050	38.10	52.40	1.85	13.46	6.40
16BSS	25.400	46.40	25.400	50.80	72.60	3.10	15.88	6.40
20BSS	31.750	58.10	31.750	63.00	100.50	3.50	19.80	9.00
24BSS	38.100	71.30	38.100	76.20	108.40	4.80	26.67	10.50
28BSS	44.450	81.10	44.450	88.90	123.00	6.00	28.58	13.10
32BSS	50.800	92.80	50.800	101.60	142.80	6.00	31.75	13.10

#Straight side plates

W SA1 W SA2

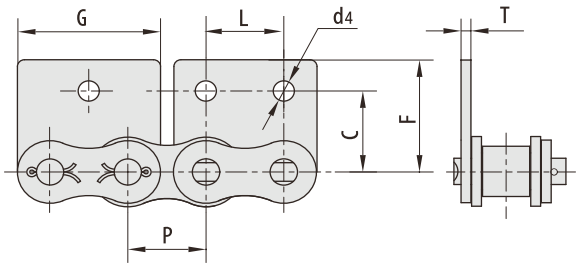

W SK1 W SK2

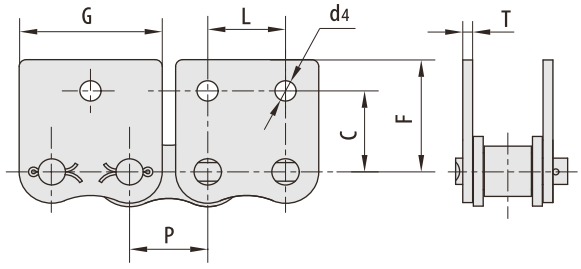

RBL chain number	P mm	G mm	L mm	C mm	F mm	T mm	d4 mm
06CSS	9.525	17.32	9.525	9.50	14.55	1.30	2.80
08ASS	12.700	23.00	12.700	12.70	17.40	1.50	3.40
10ASS	15.875	28.80	15.875	15.90	23.05	2.03	5.50
12ASS	19.050	34.65	19.050	18.30	26.86	2.42	5.50
16ASS	25.400	45.90	25.400	24.60	35.45	3.25	6.80
20ASS	31.750	57.65	31.750	31.80	44.00	4.00	9.20
24ASS	38.100	69.30	38.100	36.50	51.60	4.80	9.80
28ASS	44.450	80.45	44.450	44.50	62.00	5.60	11.40
32ASS	50.800	92.00	50.800	50.80	69.85	6.40	13.10
#06BSS	9.525	17.72	9.525	9.52	13.50	1.30	3.50
08BSS	12.700	23.30	12.700	13.35	18.90	1.60	4.30
10BSS	15.875	29.58	15.875	16.50	22.95	1.70	5.30
12BSS	19.050	34.05	19.050	21.45	28.60	1.85	6.40
16BSS	25.400	46.40	25.400	23.15	34.00	3.10	6.40
20BSS	31.750	58.10	31.750	30.50	45.70	3.50	9.00
24BSS	38.100	71.30	38.100	42.70	61.50	4.80	10.50

#Straight side plates

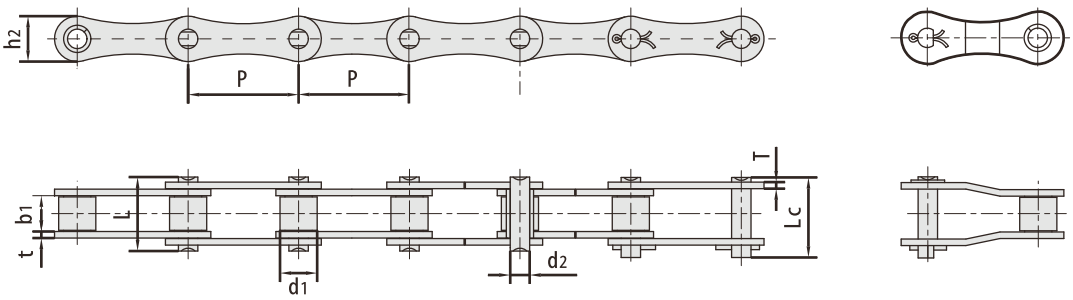

RBL chain number	Pitch	Roller diameter	Width between inner plates	Pin diameter	Pin length		Inner plate depth	Plate thickness	Breaking load	Weight
	P mm	d1 max mm	b1 min mm	d2 max mm	L max mm	Lc max mm	h2 max mm	t/T max mm	Q min kN/LBF	q kg/m
208ASS	25.40	7.95	7.85	3.96	16.60	17.80	12.00	1.50	9.6/2158	0.42
208BSS	25.40	8.51	7.75	4.45	16.70	18.20	11.80	1.60	12.0/2698	0.45
210ASS	31.75	10.16	9.40	5.08	20.70	22.20	15.00	2.03	15.2/3417	0.73
210BSS	31.75	10.16	9.65	5.08	19.50	20.90	14.70	1.70	13.3/2990	0.66
212ASS	38.10	11.91	12.57	5.94	25.90	27.70	18.00	2.42	21.7/4878	1.02
212BSS	38.10	12.07	11.68	5.72	22.50	25.20	16.00	1.85	18.5/4159	0.76
216ASS	50.80	15.88	15.75	7.92	32.70	36.50	24.00	3.25	38.9/8745	1.70
216BSS	50.80	15.88	17.02	8.28	36.10	39.10	21.00	4.50/3.10	40.0/8992	1.80
220ASS	63.50	19.05	18.90	9.53	40.40	44.70	30.00	4.00	60.0/13488	2.55
220BSS	63.50	19.05	19.56	10.19	41.30	45.00	26.40	4.50/3.50	57.0/12814	2.62
224ASS	76.20	22.23	25.22	11.10	50.30	54.30	35.70	4.80	76.2/17130	4.06
224BSS	76.20	25.40	25.40	14.63	53.40	57.80	33.20	6.00/4.80	104.0/23379	4.66

Small roller type

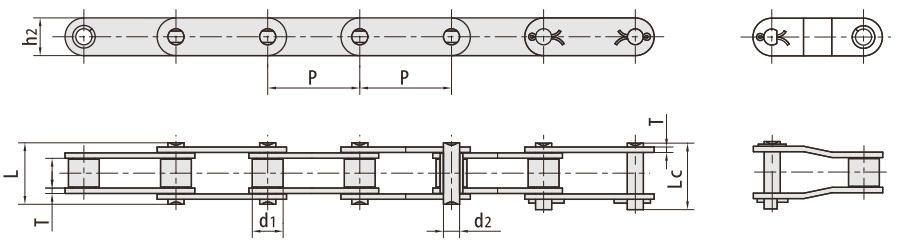

Large roller type

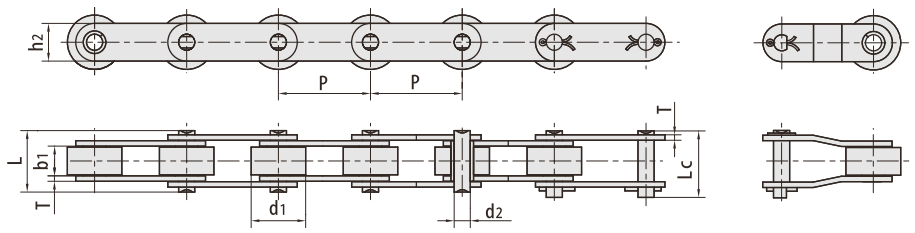

RBL chain number	Pitch P mm	Roller diameter d1 max mm	Width between inner plates b1 min mm	Pin diameter d2 max mm	Pin length L max mm	Pin length Lc max mm	Inner plate depth h2 max mm	Plate thickness t/T max mm	Breaking load Q min kN/LBF	Weight q kg/m
C2040SS C2042SS	25.40	7.95 15.88	7.85	3.96	16.6	17.8	12.0	1.50	9.6/2182	0.51 0.85
C2040HSS	25.40	7.95	7.85	3.96	18.8	19.9	12.0	2.03	9.6/2182	0.66
C208BSS C208BLSS	25.40	8.51 15.88	7.75	4.45	16.7	18.2	11.8	1.60	12.0/2727	0.56 0.90
C2050SS C2052SS	31.75	10.16 19.05	9.40	5.08	20.7	22.2	15.0	2.03	15.2/3455	0.79 1.29
C210BSS	31.75	10.16	9.65	5.08	19.5	20.9	14.7	1.70	13.3/2990	0.75
C2060SS C2062SS	38.10	11.91 22.23	12.57	5.94	25.9	27.7	18.0	2.42	21.7,4932	1.13 1.63
C2060HSS C2062HSS	38.10	11.91 22.23	12.57	5.94	29.2	31.6	18.0	3.25	21.7/4932	1.46 2.10
C212BSS	38.10	12.07	11.68	5.72	22.5	25.2	16.0	1.85	18.5/4159	0.89
C2080SS C2082SS	50.80	15.88 28.58	15.75	7.92	32.7	36.5	24.0	3.25	38.9/8841	2.11 3.16
C2080HSS C2082HSS	50.80	15.88 28.58	15.75	7.92	36.2	39.4	24.0	4.00	38.9/8841	2.57 3.63
C216BSS	50.80	15.88	17.02	8.28	36.1	39.1	21.0	4.50/3.10	40.0/8992	2.10
C2100SS C2102SS	63.50	19.05 39.67	18.90	9.53	40.4	44.7	30.0	4.00	60.0/13636	3.05 4.89
C2100HSS C2102HSS	63.50	19.05 39.67	18.90	9.53	43.6	46.9	30.0	4.80	60.0/13636	3.61 5.45
C220BSS	63.50	19.05	19.56	10.19	41.3	45.0	26.4	4.50/3.50	57.0/12814	2.93

A1

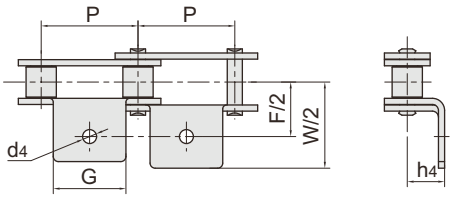

K1

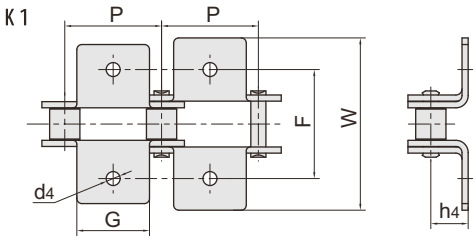

A2

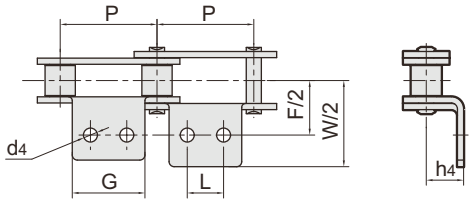

K2

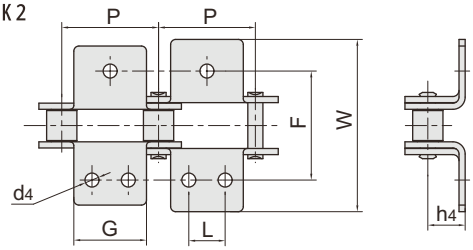

RBL chain number	P mm	G mm	L mm	F mm	W mm	h4 mm	d4 mm
C2040SS C2042SS	25.40	19.1	9.5	25.4	39.6	9.10	3.4
C208BSS C208BLSS	25.40	23.2	12.7	25.4	39.6	9.10	4.5
C2050SS C2052SS	31.75	23.8	11.9	31.8	49.0	11.10	5.5
C2060SS C2062SS	38.10	28.6	14.3	42.9	67.8	14.70	5.5
C2060HSS C2062HSS	38.10	28.6	14.3	42.9	67.8	14.70	5.5
C2080SS C2082SS	50.80	38.1	19.1	55.6	87.8	19.10	6.8
C2080HSS C2082HSS	50.80	38.1	19.1	55.6	87.8	19.10	6.8
C2100SS C2102SS	63.50	47.6	23.8	66.6	107.5	23.40	9.2
C2100HSS C2102HSS	63.50	47.6	23.8	66.6	107.5	23.40	9.2

SA1

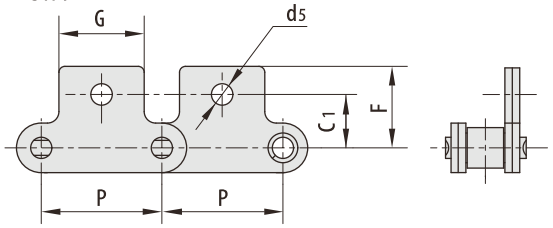

SK1

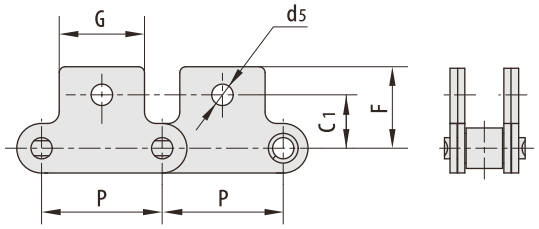

SA2

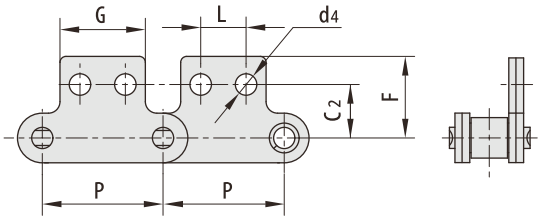

SK2

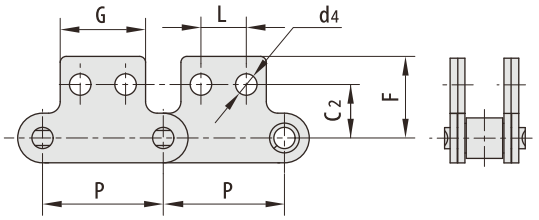

RBL chain number	P mm	G mm	L mm	C1 mm	C2 mm	F mm	d4 mm	d5 mm
C2040SS C2042SS	25.400	19.10	9.50	11.10	13.50	20.50	3.40	5.50
C208BSS C208BLSS	25.400	23.20	12.70	11.10	13.50	20.50	4.50	5.50
C2050SS C2052SS	31.750	23.80	11.90	14.30	15.90	25.00	5.50	6.60
C2060SS C2062SS	38.100	28.60	14.30	17.50	19.10	32.90	5.50	9.20
C2060HSS C2062HSS	38.100	28.60	14.30	17.50	19.10	32.90	5.50	9.20
C2080SS C2082SS	50.800	38.10	19.10	22.20	25.40	43.50	6.60	11.00
C2080HSS C2082HSS	50.800	38.10	19.10	22.20	25.40	43.50	6.60	11.00
C2100SS C2102SS	63.500	47.60	23.80	28.60	31.80	50.40	8.40	13.00
C2100HSS C2102HSS	63.500	47.60	23.80	28.60	31.80	50.40	8.40	13.00

Type A

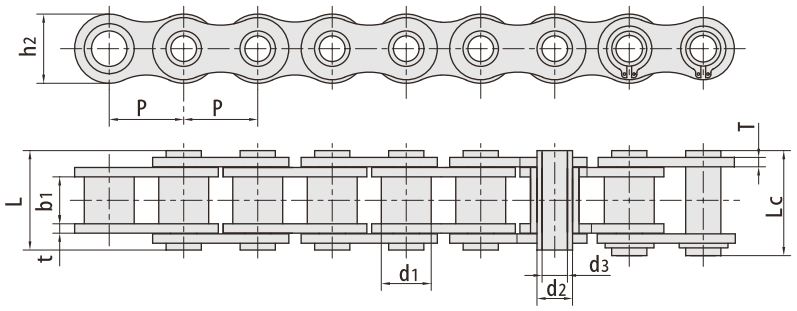

Type B

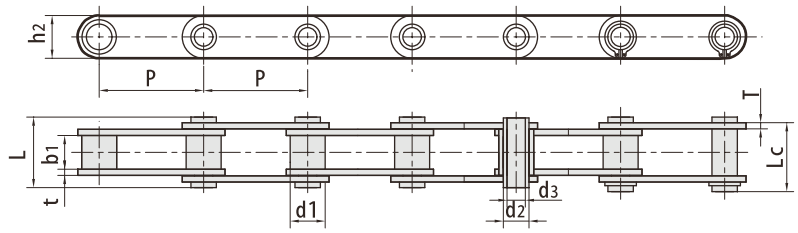

RBL chain number	Pitch	Bush diameter	Width between inner plates	Pin diameter		Pin length		Inner plate depth	Plate thickness	Breaking load	Weight	Type
	P mm	d1 max mm	b1 min mm	d2 max mm	d3 min mm	L max mm	Lc max mm	h2 max mm	t/T max mm	Q min kN/LBF	q kg/m	
08BHPSS	12.700	8.51	7.75	6.55	4.50	16.40	-	11.80	1.60	7.7/1731	0.56	A
08BHPFSS	12.700	8.51	7.75	6.55	4.50	16.40	17.60	11.80	1.60/1.30	7.8/1753	0.50	A
08BHPF5SS	12.700	8.51	7.75	6.30	4.50	16.80	18.00	12.00	1.60	6.7/1506	0.63	A
C08BHPSS	12.700	8.51	7.75	6.55	4.50	16.40	17.60	11.80	1.60/1.30	7.7/1731	0.62	B
40HPSS	12.700	7.95	7.85	5.63	4.00	16.50	17.60	12.00	1.50	7.7/1731	0.55	A
50HPSS	15.875	10.16	9.40	7.03	5.13	20.70	21.90	15.09	2.03	14.0/3147	0.92	A
10BHPF3SS	15.875	10.16	9.65	7.02	5.13	19.05	20.50	14.70	1.70	7.0/1574	0.87	A
60HPSS	19.050	11.91	12.70	8.31	6.00	25.80	26.80	18.00	2.42	16.8/3777	1.31	A
60HPF6SS	19.050	11.91	12.70	8.31	5.00	25.80	26.80	18.00	2.42	15.0/3409	1.40	A
80HPSS	25.400	15.88	15.75	11.40	8.05	32.50	33.80	24.00	3.25	35.0/7868	2.29	A
C2040HPSS	25.400	7.95	7.85	5.63	4.00	16.50	17.60	12.00	1.50	7.7/1731	0.47	B
HB25.4F10SS	25.400	10.16	9.40	7.22	5.12	20.50	21.80	14.95	2.03	12.0/2698	0.84	B
C2050HPSS	31.750	10.16	9.40	7.22	5.12	20.50	21.80	15.00	2.03	14.3/3215	0.77	B
C2060HPSS	38.100	11.91	12.70	8.31	6.00	25.80	26.80	17.00	2.42	16.8/3777	1.03	B
HP50F10SS	50.000	18.00	12.00	8.30	8.30	39.50	40.60	30.00	3.00	30.0/6744	2.71	B
C2080HPSS	50.800	15.88	15.75	11.40	8.05	32.50	33.80	24.00	3.25	35.0/7868	1.83	B

Type A

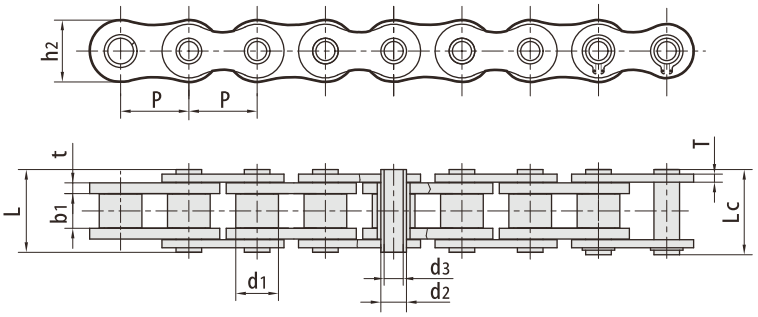

Type B

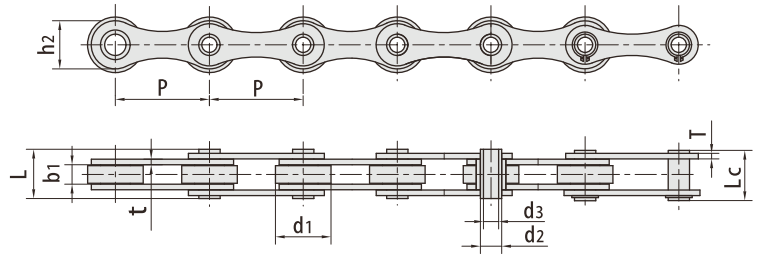

RBL chain number	Pitch	Bush diameter	Width between inner plates	Pin diameter		Pin length		Inner plate depth	Plate thickness	Breaking load	Weight	Type
	P mm	d1 max mm	b1 min mm	d2 max mm	d3 min mm	L max mm	Lc max mm	h2 max mm	t/T max mm	Q min kN/LBF	q kg/m	
10BHPSS	15.875	10.16	9.65	5.94	4.04	19.30	20.50	14.70	1.70	11.0/2473	0.87	A
12BHPSS	19.050	12.07	11.68	6.50	4.00	21.60	22.80	15.90	1.85	14.0/3147	1.12	A
16BHBSS	25.400	15.88	17.02	8.28	4.20	35.20	36.50	21.00	4.15/3.10	25.4/5710	2.50	A
16BHBF1SS	25.400	15.88	12.70	9.53	7.05	30.80	32.20	23.00	4.15/3.10	25.0/5620	2.30	A
HB25.4F6SS	25.400	16.00	8.00	6.05	4.20	19.20	20.20	12.00	2.03	6.0/1349	0.90	B
HP35SS	35.000	20.00	16.00	13.35	10.20	30.40	31.60	26.30	2.50	16.4/3687	2.13	A
HP41.75F1SS	41.750	17.10	20.20	11.11	8.20	35.70	39.00	21.65	3.10	13.2/2967	1.60	A
HP41.75F3SS	41.750	17.00	20.50	11.00	8.30	36.00	39.50	21.40	3.00	13.2/2967	1.64	A
DH16500HPSS	50.000	30.00	10.50	11.40	8.20	27.40	28.60	26.00	3.10	29.0/6519	2.24	B
HB50F4SS	50.000	30.00	10.00	11.60	8.20	26.60	28.40	25.40	3.00	36.0/8093	1.47	B
HP50F8SS	50.000	25.00	11.20	8.95	6.30	26.00	26.70	20.20	2.50	19.5/4384	1.79	B
HB50.8SS	50.800	30.00	10.50	11.40	8.20	27.40	28.60	26.00	3.10	35.0/7868	2.60	A
HB50.8F13SS	50.800	30.60	13.25	11.40	8.20	30.50	31.70	25.50	3.10	32.0/7194	1.66	B
HB50.8F42SS	50.800	30.00	10.00	11.60	8.00	26.60	30.00	25.40	3.00	50.0/11240	2.00	B
1650HPF3SS	50.800	30.00	10.50	11.20	8.20	27.40	28.60	26.00	3.10	32.0/7194	1.80	B
HB50.8F21SS	50.800	30.00	10.00	11.60	8.20	26.60	28.40	25.40	3.00	36.0/8093	1.46	B
DH16500HPSS	50.800	30.00	10.50	11.40	8.20	27.40	28.60	26.00	3.10	32.0/7194	1.60	B
HB63F6SS	63.000	30.00	10.00	11.70	8.20	26.70	28.10	26.50	3.10	35.0/7868	2.09	B
HB100F7SS	100.000	30.00	10.00	11.50	8.20	26.50	27.70	25.50	3.00	35.0/7868	1.28	B

Type A

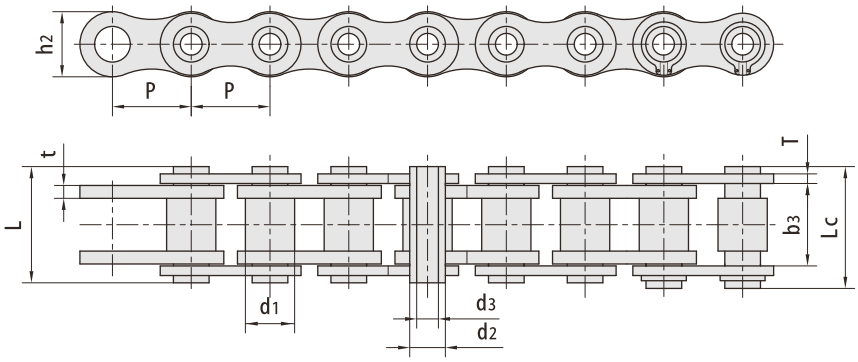

Type B

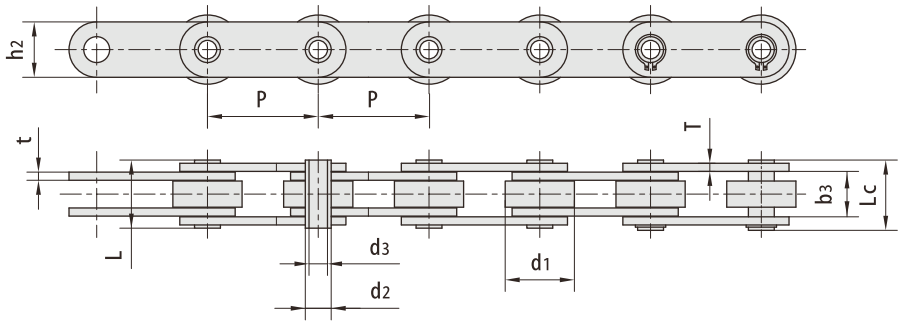

RBL chain number	Pitch	Bush diameter	Width between inner plates	Pin diameter		Pin length		Inner plate depth	Plate thickness	Breaking load	Weight	Type
	P mm	d1 max mm	b1 min mm	d2 max mm	d3 min mm	L max mm	Lc max mm	h2 max mm	t/T max mm	Q min kN/LBF	q kg/m	
08BHPF2SS	12.700	8.51	13.20	6.65	5.20	18.00	19.20	11.80	1.60	7.0/1591	0.50	A
08BHPF3SS	12.700	8.51	13.40	6.65	4.00	19.00	20.20	11.80	1.70	9.8/227	0.69	A
10BHPF9SS	15.875	10.16	15.80	7.03	5.10	19.20	20.20	14.00	1.85	11.9/2705	0.87	A
12BHPF1SS	19.050	12.07	15.80	8.03	5.40	22.70	23.90	15.80	1.85	13.0/2955	1.20	A
12BHPF8SS	19.050	12.07	12.70	8.03	5.70	22.40	23.90	15.80	1.85	13.0/2955	1.04	A
60HPF3SS	19.050	11.91	12.70	8.40	6.10	24.70	26.00	18.00	2.03	12.0/2727	1.54	A
HP20SS	20.000	12.00	28.80	8.40	6.00	38.00	40.00	18.00	3.00	18.0/4091	3.00	A
HB38.1F5SS	38.100	18.00	22.50	14.00	10.20	32.80	34.30	28.00	3.50	40.0/9091	2.80	B

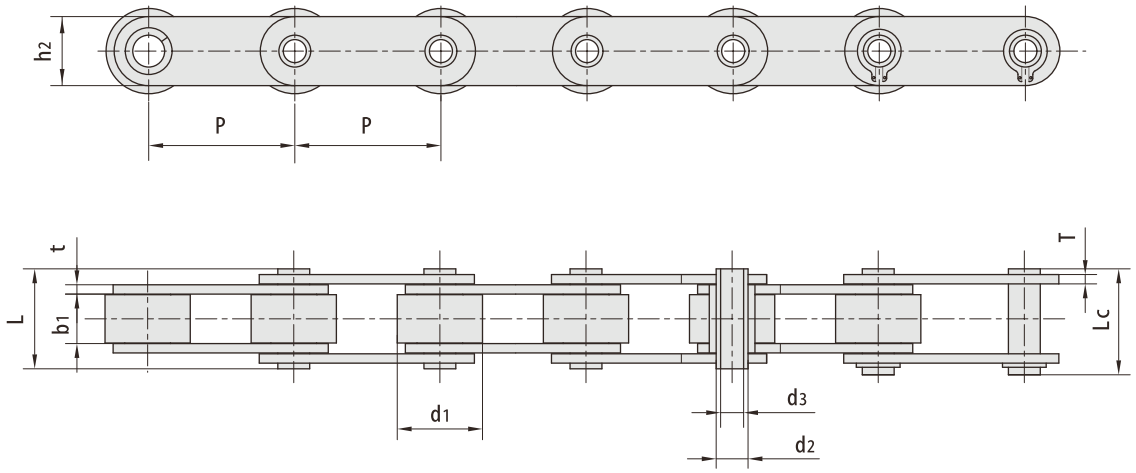

RBL chain number	Pitch	Bush diameter	Width between inner plates	Pin diameter		Pin length		Inner plate depth	Plate thickness	Breaking load	Weight
	P mm	d1 max mm	b1 min mm	d2 max mm	d3 min mm	L max mm	Lc max mm	h2 max mm	T max mm	Q min kN/LBF	q kg/m
C2042HPSS	25.400	15.88	7.85	5.63	4.00	16.50	17.60	12.00	1.50	7.7/1731	0.79
C2052HPSS	31.750	19.05	9.53	7.22	5.12	20.50	21.80	15.00	2.03	14.3/3215	1.27
C2062HPSS	38.100	22.23	12.70	8.31	6.00	25.80	26.80	17.00	2.42	16.8/3777	1.74
C2082HPSS	50.800	28.58	15.75	11.40	8.05	32.40	33.80	24.00	3.25	35.0/7868	2.86
C2042H-HPSS	25.400	15.88	7.85	5.63	4.00	18.80	19.90	12.00	2.03	7.7/1731	0.96
C2052H-HPSS	31.750	19.05	9.53	7.22	5.12	22.10	23.40	15.00	2.42	14.3/3215	1.46
C2062H-HPSS	38.100	22.23	12.70	8.31	6.00	29.20	30.20	17.00	3.25	16.8/3777	2.02
C2082H-HPSS	50.800	28.58	15.75	11.40	8.05	36.20	37.60	24.00	4.00	35.0/7868	3.30
HB25.4F2SS	25.400	15.89	17.26	9.00	6.35	31.30	32.50	20.00	2.50	24.0/5395	1.99
HB30SS	30.000	20.00	14.70	9.00	6.30	29.00	31.00	20.00	2.50	18.0/4046	2.23
HB45SS	45.000	28.00	17.75	10.00	6.00	34.50	36.60	25.40	3.00	35.0/7868	3.60
HB50F3SS	50.000	25.00	11.50	9.00	6.00	25.00	26.50	20.00	2.50	21.0/4721	1.24
HB50F5SS	50.000	28.00	17.75	10.00	6.00	34.50	36.60	25.00	3.00	35.0/7868	3.43
HB50F6SS	50.000	20.00	17.75	10.00	6.00	34.50	36.60	25.00	3.00	35.0/7868	2.51
C10BHBSS	15.875	10.16	9.65	5.94	4.04	19.30	20.50	14.70	1.70	10.0/2248	0.99
C60HBF4SS	19.080	11.91	12.70	7.00	4.00	25.50	36.60	18.00	2.42	15.0/3372	1.70
MC35SS-P-50	50.000	31.00	14.80	14.00	10.20	31.00	33.00	25.00	3.00	21.0/4721	2.90
DH4203HPSS	76.200	31.75	15.00	14.00	10.10	25.00	39.00	26.00	3.80	29.4/6609	3.05

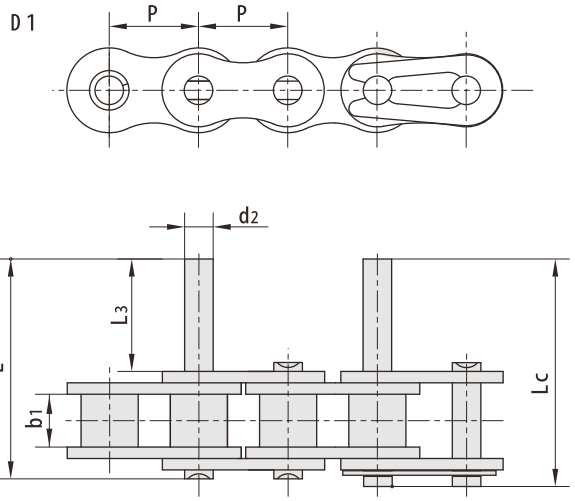

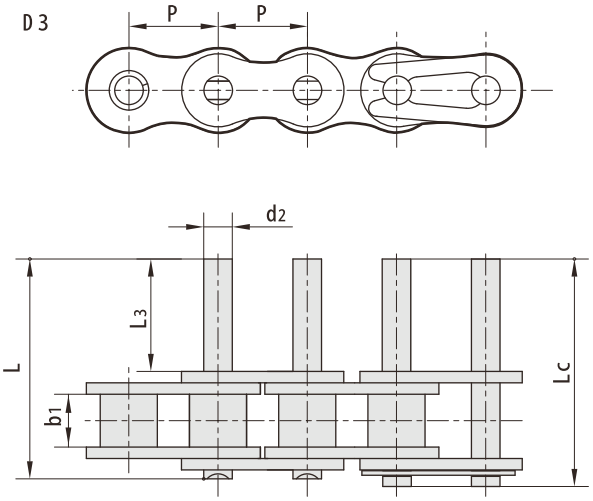

RBL chain number	P mm	b1 mm	d2 mm	L3 mm	L mm	Lc mm
06CSS	9.525	4.77	3.58	9.5	20.8	21.6
08ASS	12.700	7.85	3.96	9.5	25.1	26.2
10ASS	15.875	9.40	5.08	11.9	31.3	33.1
12ASS	19.050	12.57	5.94	14.3	38.6	40.6
16ASS	25.400	15.75	7.92	19.1	50.3	53.3
20ASS	31.750	18.90	9.53	23.8	61.8	66.1
24ASS	38.100	25.22	11.10	28.6	76.4	80.4
28ASS	44.450	25.22	12.70	33.3	84.8	89.4
32ASS	50.800	31.55	14.27	38.1	99.6	104.4
08BSS	12.700	7.75	4.45	9.5	25.1	26.6
10BSS	15.875	9.65	5.08	11.9	30.1	31.5
12BSS	19.050	11.68	5.72	14.3	35.4	37.1
16BSS	25.400	17.02	8.28	19.1	53.0	54.3
20BSS	31.750	19.56	10.19	41.0	79.9	83.6
24BSS	38.100	25.40	14.63	50.7	101.4	105.8
28BSS	44.450	30.99	15.90	61.9	124.0	128.4
32BSS	50.800	30.99	17.81	64.8	126.8	131.8

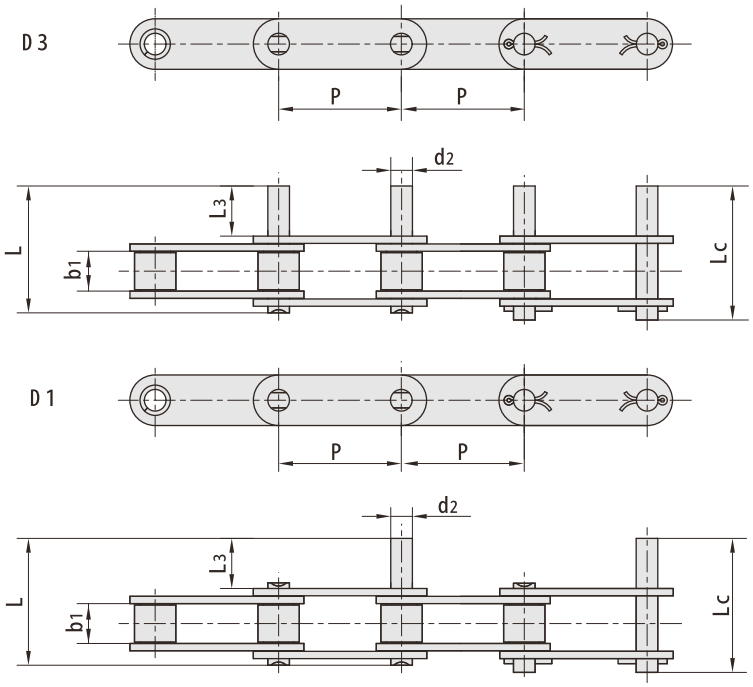

RBL chain number	P mm	b1 mm	d2 mm	L3 mm	L mm	Lc mm
C2040SS C2042SS	25.40	7.85	3.96	9.5	25.1	26.2
C2050SS C2052SS	31.75	9.40	5.08	11.9	31.3	33.1
C2060SS C2062SS	38.10	12.57	5.94	14.3	38.6	40.6
C2060HSS C2062HSS	38.10	12.57	5.94	14.3	42.0	43.8
C2080SS C2082SS	50.80	15.75	7.92	19.1	50.3	53.3
C2080HSS C2082HSS	50.80	15.75	7.92	19.1	53.5	55.0
C2100SS C2102SS	63.50	18.90	9.53	23.8	61.8	66.1
C2100HSS C2102HSS	63.50	18.90	9.53	23.8	65.0	68.3
C2120HSS C2122HSS	76.20	25.22	11.10	28.6	79.6	83.6
C2160HSS C2162HSS	101.60	31.75	14.27	38.1	103.0	107.8

1.without rollers

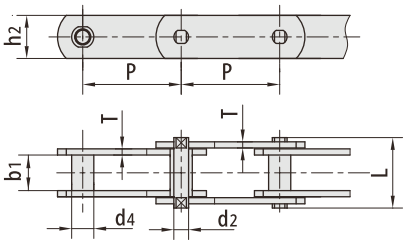

2.with S small rollers type

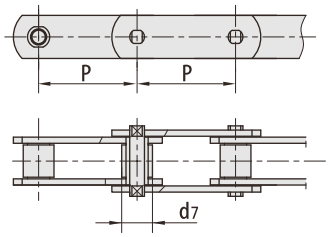

3.with P large rollers type

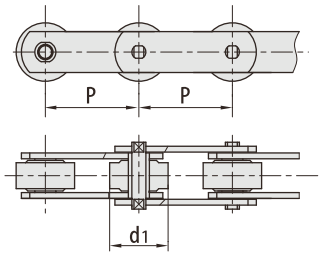

4.with F flanged rollers type

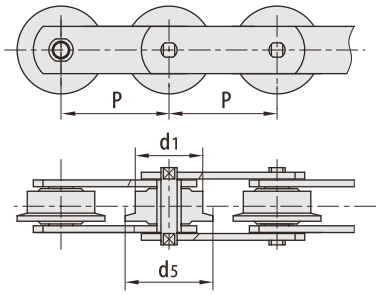

5.Welded pins with plates

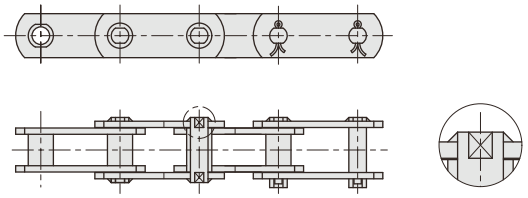

RBL chain number	Pitch P mm							Roller diameter d1 max mm	d7 max mm	d5 max mm	Bush diameter d4 max mm
M20SS	40.0	50.0	63.0	80.0	100.0	125.0	160.0	25.00	12.50	30.00	9.00
M28SS	50.0	63.0	80.0	100.0	125.0	160.0		30.00	15.00	36.00	10.00
M40SS	63.0	80.0	100.0	125.0	160.0	-	-	36.00	18.00	42.00	12.50
M56SS	63.0	80.0	100.0	125.0	160.0	-	-	42.00	21.00	50.00	15.00
M80SS	80.0	100.0	125.0	160.0	-	-	-	50.00	25.00	60.00	18.00
M 112SS	80.0	100.0	125.0	160.0	-	-	-	60.00	30.00	70.00	21.00
M 160SS	100.0	125.0	160.0	-	-	-	-	70.00	36.00	85.00	25.00

RBL chain number	Width between inner plates b1 min mm	Pin diameter d2 max mm	Pin length L max mm	plate depth h2 max mm	Plate thickness t/T max mm	Tensile strength Q min kN/LBF
M20SS	16.00	6.00	35.00	18.00	2.50	20.0/4545
M28SS	18.00	7.00	40.00	20.00	3.00	28.0/6364
M40SS	20.00	8.50	45.00	25.00	3.50	40.0/9091
M56SS	24.00	10.00	52.00	30.00	4.00	56.0/12727
M80SS	28.00	12.00	62.00	35.00	5.00	80.0/18182
M 112SS	32.00	15.00	73.00	40.00	6.00	112.0/25454
M 160SS	37.00	18.00	85.00	50.00	7.00	160.0/36364

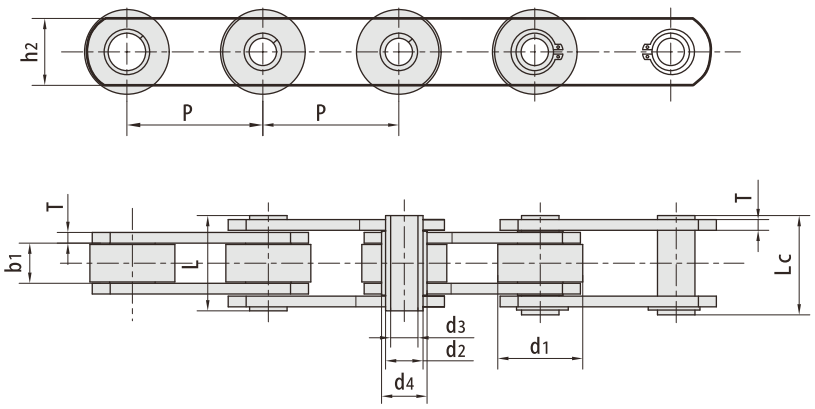

without rollers

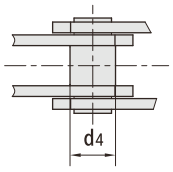

with S small rollers type

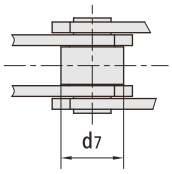

with P large rollers type

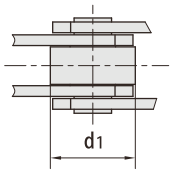

with F flanged rollers type

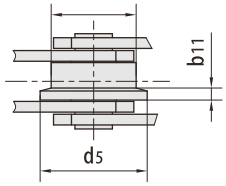

RBL chain number	Pitch P mm					Roller diameter d1 max mm	d7 max mm	d5 max mm	d11	Bush diameter d4 max mm	plate depth h2 max mm
MC28SS	63.0	80.0	100.0	125.0	160.0	36.0	25.0	45.0	4.5	17.5	2.5
MC56SS	80.0	100.0	125.0	160.0	200.0	50.0	30.0	60.0	5.0	21.0	35.0
MC112SS	100.0	125.0	160.0	200.0	-	70.0	42.0	85.0	7.0	29.0	50.0
MC224SS	160.0	200.0	-	-	-	100.0	60.0	120.0	10.0	41.0	70.0

RBL chain number	Width between inner plates b1 min mm	Pin diameter d2 max mm	Pin diameter d3 min mm	Pin length L max mm	Pin length Lc max mm	Plate thickness t/T max mm	Tensile strength Q min kN/LBF
MC28SS	20.0	13.0	8.2	36.0	38.5	3.5	28.0/6364
MC56SS	24.0	15.5	10.2	45.0	47.5	4.0	56.0/12727
MC112SS	32.0	22.0	14.3	62.5	64.3	6.0	112.0/25454
MC224SS	43.0	31.0	20.3	83.0	85.5	8.0	224.0/50909

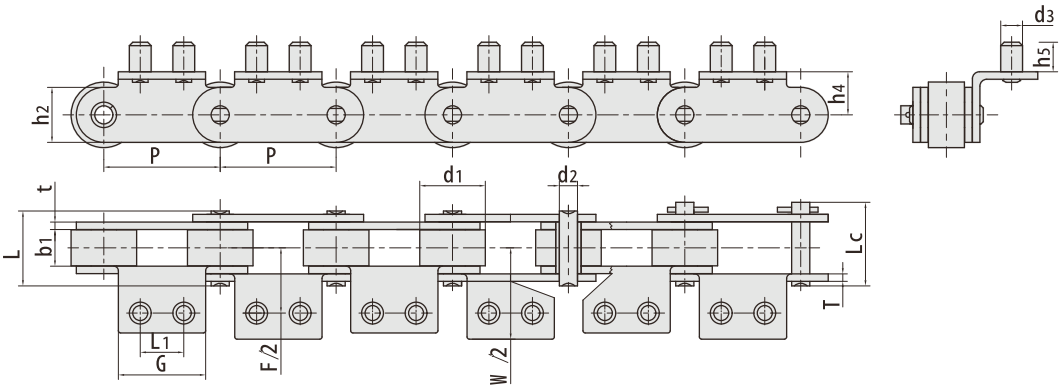

RBL chain number	Pitch	Roller diameter	Width between inner plates	Pin diameter	Pin length		Inner plate depth	Plate thickness	Tensile strength	Weight
	P mm	d1 max mm	b1 min mm	d2 max mm	L max mm	Lc max mm	h2 max mm	t/T max mm	Q min kN/LBF	q kg/m
C2082SSA2F3	50.80	28.58	15.75	7.92	32.70	36.5	22.60	3.25	39/8767	2.8

RBL chain number	G mm	L1 mm	F mm	W mm	h4 mm	h5 mm	d3 mm
C2082SSA2F3	38.10	19.05	57.16	78.00	18.50	12.70	9.53

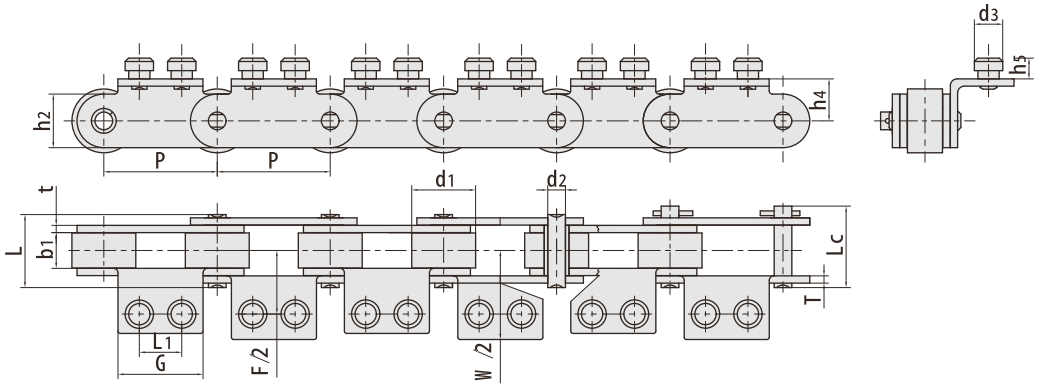

RBL chain number	Pitch	Roller diameter	Width between inner plates	Pin diameter	Pin length		Inner plate depth	Plate thickness	Tensile strength	Weight
	P mm	d1 max mm	b1 min mm	d2 max mm	L max mm	Lc max mm	h2 max mm	t/T max mm	Q min kN/LBF	q kg/m
C2082SSA2F4	50.80	28.58	15.75	7.92	32.70	36.5	22.60	3.25	39/8767	2.8

RBL chain number	G mm	L1 mm	F mm	W mm	h4 mm	h5 mm	d3 mm
C2082SSA2F4	38.10	19.05	57.16	78.00	18.70	8.50	12.70

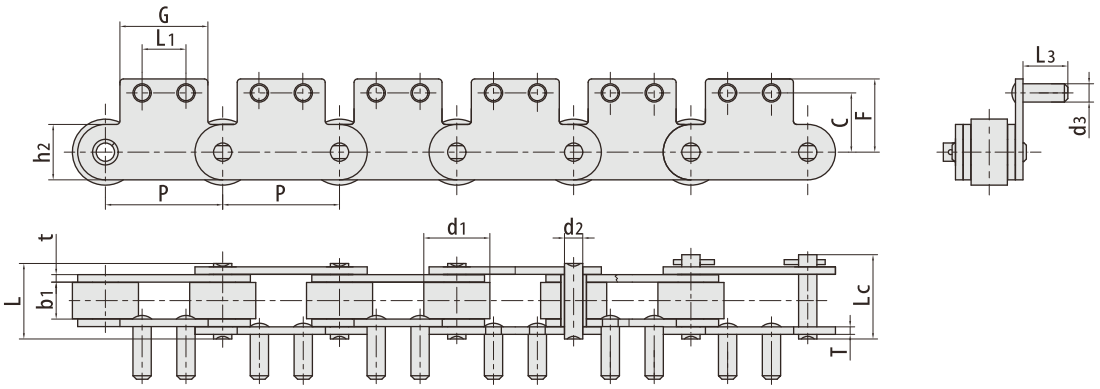

RBL chain number	Pitch	Roller diameter	Width between inner plates	Pin diameter	Pin length		Inner plate depth	Plate thickness	Tensile strength	Weight
	P mm	d1 max mm	b1 min mm	d2 max mm	L max mm	Lc max mm	h2 max mm	t/T max mm	Q min kN/LBF	q kg/m
C2082SSSA2F1	50.80	28.58	15.75	7.92	32.70	36.5	22.60	3.25	39/8767	2.66

RBL chain number	P mm	G mm	L1 mm	C mm	F mm	L3 mm	d3 mm
C2082SSSA2F1	50.80	38.10	19.05	25.40	31.80	19.20	7.92

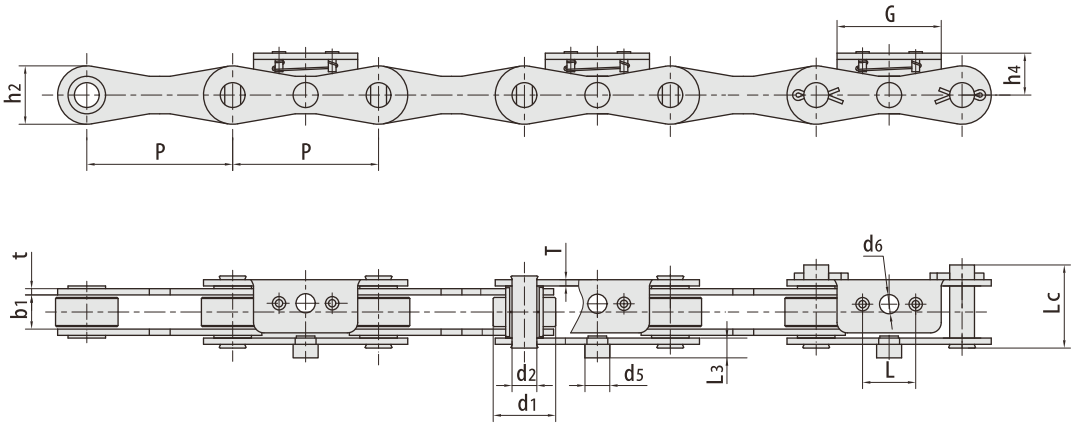

RBL chain number	Pitch	Roller diameter	Width between inner plates	Pin diameter	Pin length	plate dimension		Attachment dimension						Tensile strength
	P mm	d1 max mm	b1 min mm	d2 max mm	Lc max mm	h2 max mm	t/T max mm	H4 mm	d5 mm	d6 mm	G mm	L mm	L3 mm	Q min Kn/Lb5
P70F2SS	70.00	30.00	15.75	11.98	39.9	28.0	3.1	20.0	12.0	9.2	50.0	25.5	7.0	22.5/5058

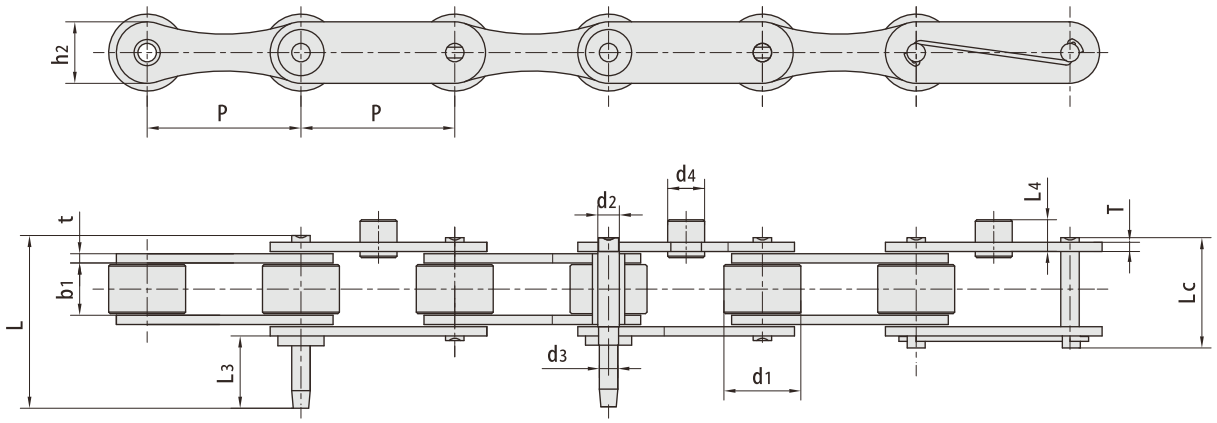

RBL chain number	Pitch	Roller diameter	Width between inner plates	Pin diameter	Pin length			plate dimension		Attachment dimension			Tensile strength
	P mm	d1 max mm	b1 min mm	d2 max mm	L max mm	Lc max mm	L3 mm	h2 max mm	t/T max mm	d3 mm	d4 mm	L4 max mm	Q min Kn/Lb5
P50F10SS	50.00	25.00	18.00	7.00	56.2	35.7	25.5	20.0	3.0	6.00	12.0	10.0	25.0/5620

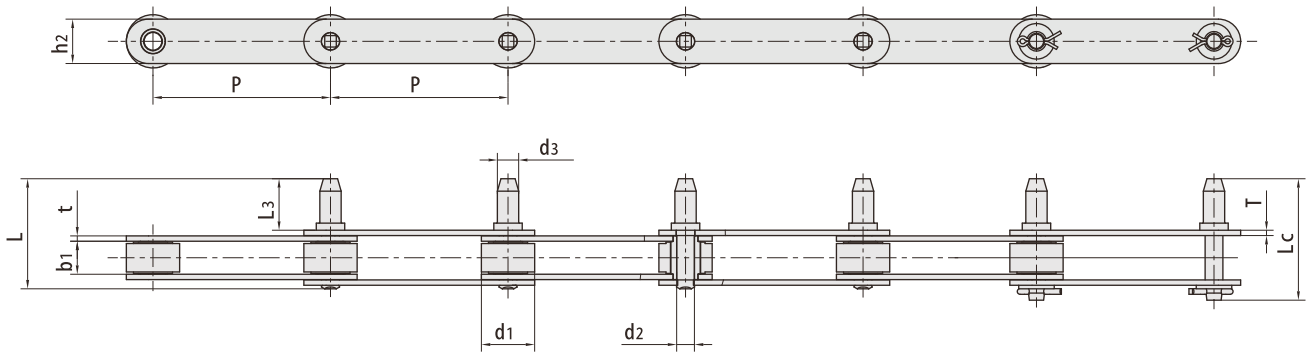

RBL chain number	Pitch	Roller diameter	Width between inner plates	Pin diameter		Pin length			Inner plate depth	Plate thickness	Tensile strength	Weight
	P mm	d1 max mm	b1 min mm	d2 max mm	d3 max mm	L max mm	Lc max mm	L3 mm	h2 max mm	t/T max mm	Q min Kn/Lb5	q kg/m
P100F135SS-D3	100.00	30.00	18.20	10.00	12.00	61.6	68.0	29.0	25.0	3.0	30/6744	2.8

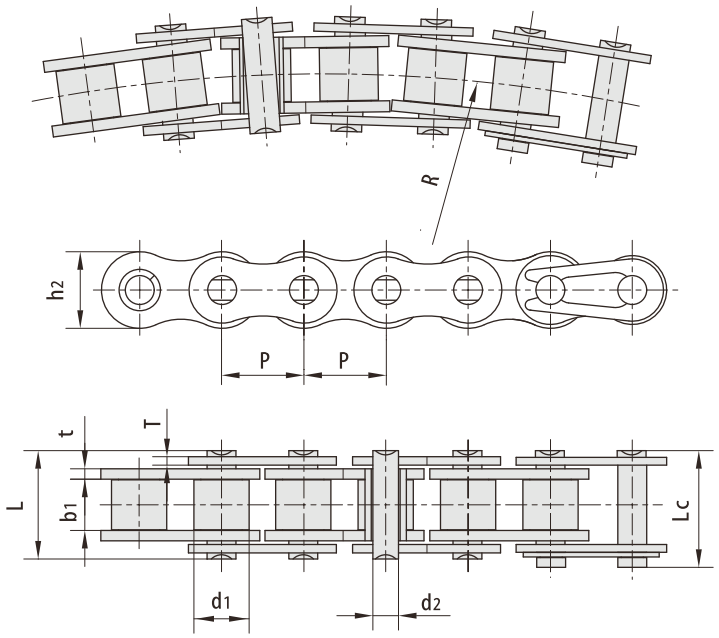

RBL chain number	Pitch	Roller diameter	Width between inner plates	Pin diameter	Pin length		Inner plate depth	Plate thickness	Side bow radius	Tensile strength	Weight
	P mm	d1 max mm	b1 min mm	d2 max mm	L max mm	Lc max mm	h2 max mm	t/T max mm	R mm	Q min Kn/Lb5	q kg/m
40SBSS	12.700	7.95	7.85	3.96	16.9	18.1	11.7	1.50	350	7/1574	0.63
435BSS	12.700	7.95	7.85	3.45	18.5	-	11.7	1.50	305	7/1574	0.65
50SSSB	15.875	10.16	9.40	4.37	20.7	22.7	15.1	2.03	400	12.4/2788	1.10
16BSBSS	25.400	15.88	17.22	7.90	36.5	39.7	21.0	3.70/3.00	500	12.5/2810	2.53

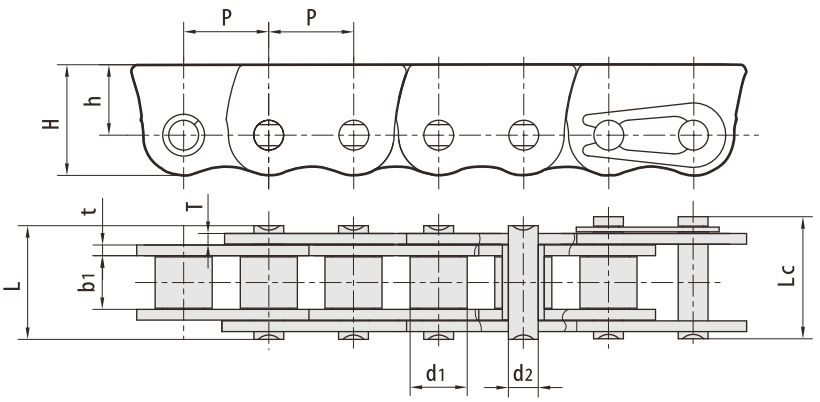

RBL chain number	Pitch	Roller diameter	Width between inner plates	Pin diameter	Pin length	plate dimension			Tensile strength	Weight
	P mm	d1 max mm	b1 min mm	d2 max mm	L max mm	H max mm	h max mm	t/T max mm	Q min Kn/Lb5	q kg/m
06BF33SS	9.525	6.35	5.72	3.28	13.15	12.38	7.88	1.30	6.2/1394	0.63
06BF40SS	9.525	6.35	5.72	3.28	13.15	12.38	7.88	1.30	6.2/1394	0.63
*06C F49SS	9.525	5.08	4.77	3.58	14.80	13.20	8.80	2.03	8.0/1799	0.89
*06C F51SS	9.525	5.08	4.77	3.58	12.80	13.20	8.80	2.03/1.00	7.0/1574	0.69
08BSSF20	12.700	8.51	7.75	4.45	16.70	16.50	10.50	1.60	12.0/2698	1.06
08BF66SS	12.700	8.51	7.75	4.45	18.80	14.30	8.50	2.03	12.0/2698	1.07
08BSSF74	12.700	8.51	7.75	4.45	18.80	15.50	9.70	2.03/135	13.0/2922	1.19

*Bush chain: d1 in the table indicates the external diameter of the bush.

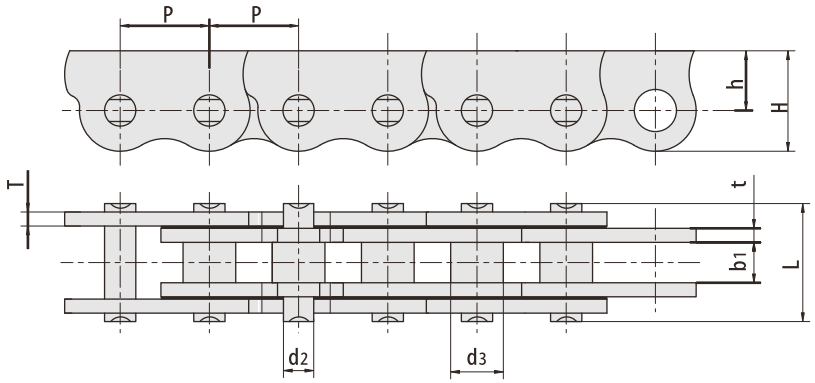

RBL chain number	Pitch	Width between inner plates	Pin diameter		Pin length	plate dimension			Tensile strength
	P mm	b1 min mm	d2 max mm	d4 max mm	L max mm	H max mm	h max mm	t/T max mm	Q min Kn/Lb5
06CF31SS	9.525	4.50	3.58	5.08	11.50	12.40	7.90	1.30	5.2/1169
P12.7F3SS	12.700	5.50	4.45	7.50	15.60	14.30	8.90	2.03	12.0/2698

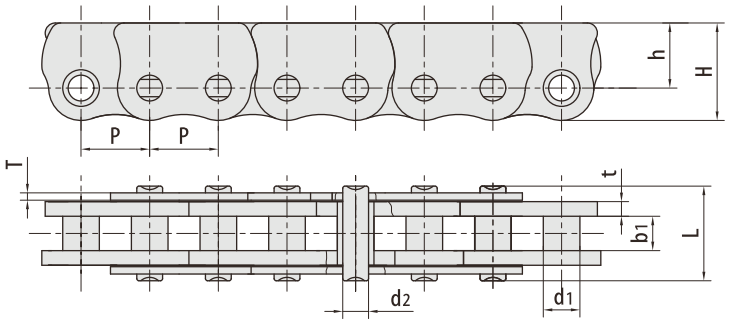

RBL chain number	Pitch	Bush diameter	Width between inner plates	Pin diameter	Pin length	plate dimension			Tensile strength
	P mm	d1 max mm	b1 min mm	d2 max mm	L max mm	H max mm	h max mm	t/T max mm	Q min Kn/Lb5
06CF51SS	9.525	5.08	4.77	3.58	12.80	13.20	8.80	1.00/2.03	7.0/1574

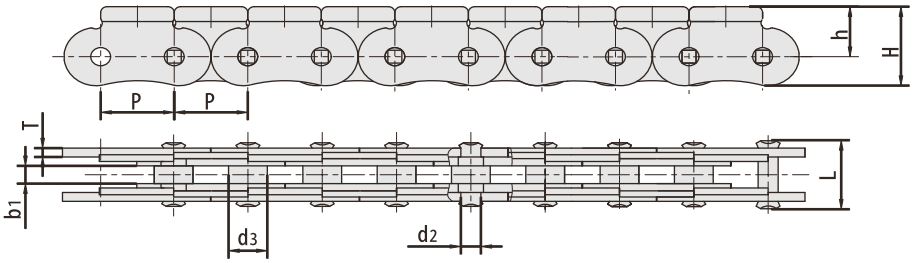

RBL chain number	Pitch	Width between inner plates	Pin diameter		Pin length	plate dimension			Tensile strength
	P mm	b1 min mm	d2 max mm	d3 max mm	L max mm	H max mm	h mm	t/T max mm	Q min Kn/Lb5
P11.5SS	11.500	3.00	3.00	6.00	108.0	13.50	8.5	1.50	5.5/1236

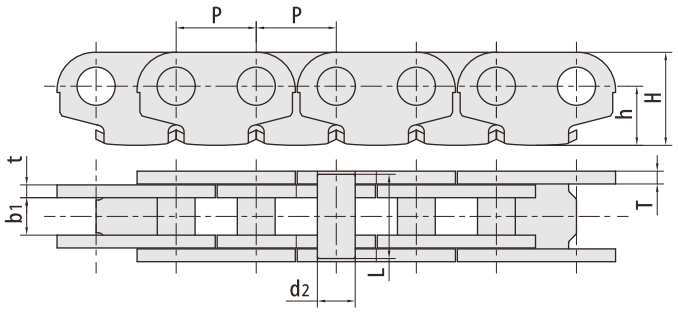

RBL chain number	Pitch	Width between inner plates	Pin diameter	Pin length	plate dimension			Tensile strength	Weight
	P mm	b1 min mm	d2 max mm	L max mm	H max mm	h max mm	t/T max mm	Q min Kn/Lb5	q kg/m
P12.7F14SBSS	12.70	5.94	6.00	13.40	14.76	9.38	2.03	10.0/2248	0.89

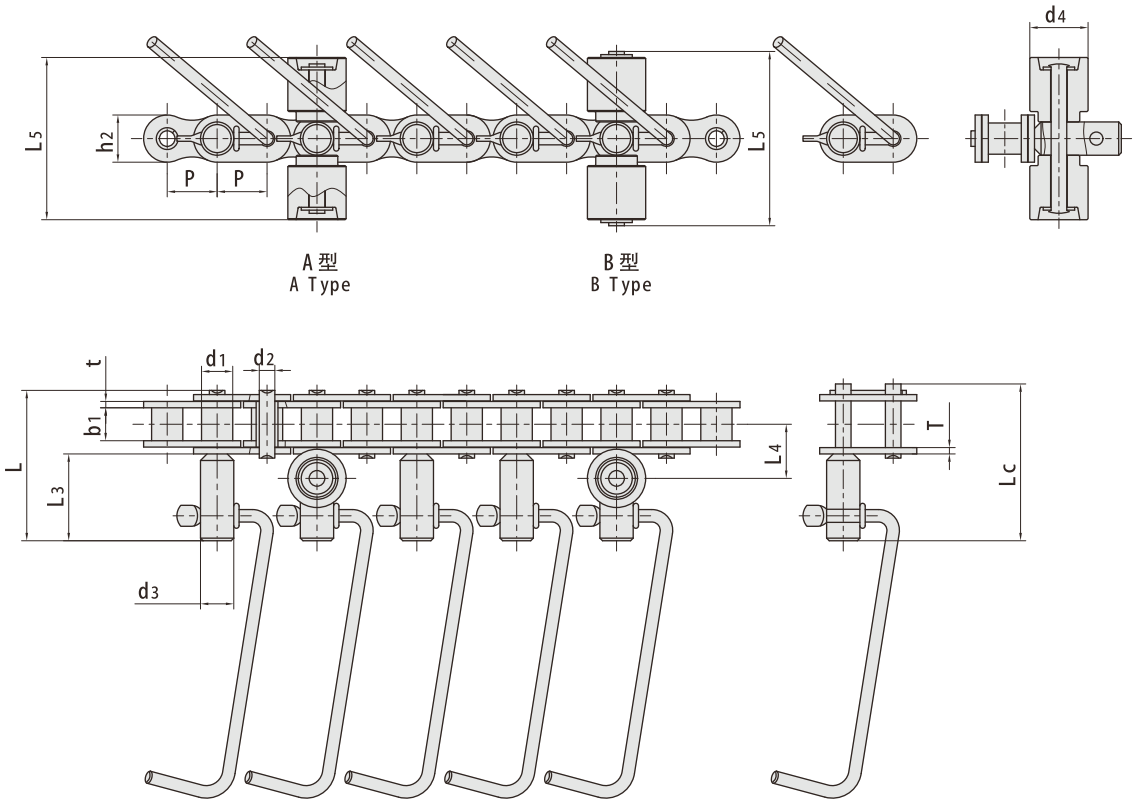

RBL chain number	Pitch	Roller diameter	Width between inner plates	Pin diameter	Pin length		plate dimension		Attachment dimension					Tensile strength	Type
	P mm	d1 max mm	b1 min mm	d2 max mm	L max mm	Lc max mm	h2 max mm	t/T max mm	d3 mm	d4 mm	L3 mm	L4 mm	L5 mm	Q min Kn/Lb5	
C60SBSS316-D1F73	19.05	11.91	12.57	5.94	57.5	59.9	18.0	2.42	12.7	22.23	33.2	20.65	63.5	18.8/4226	A
C60SBSS316-D1F74	19.05	11.91	12.57	5.94	57.5	59.9	18.0	2.42	12.7	22.23	33.2	20.65	68.6	18.8/4226	B

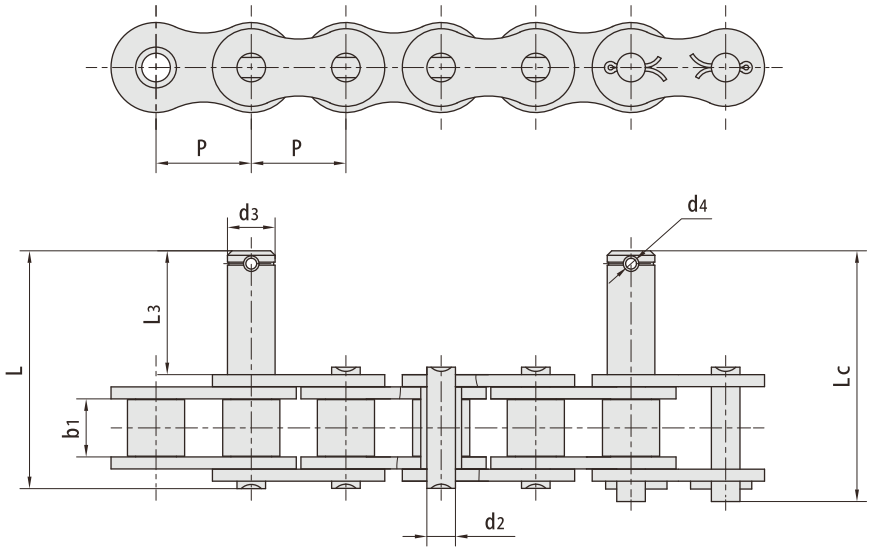

RBL chain number	P mm	b1 mm	d2 mm	d3 mm	L3 mm	L mm	Lc mm	d4 mm
20ASS316-D 1F9	31.75	27.46	9.53	15.87	41.30	79.40	83.60	3.60

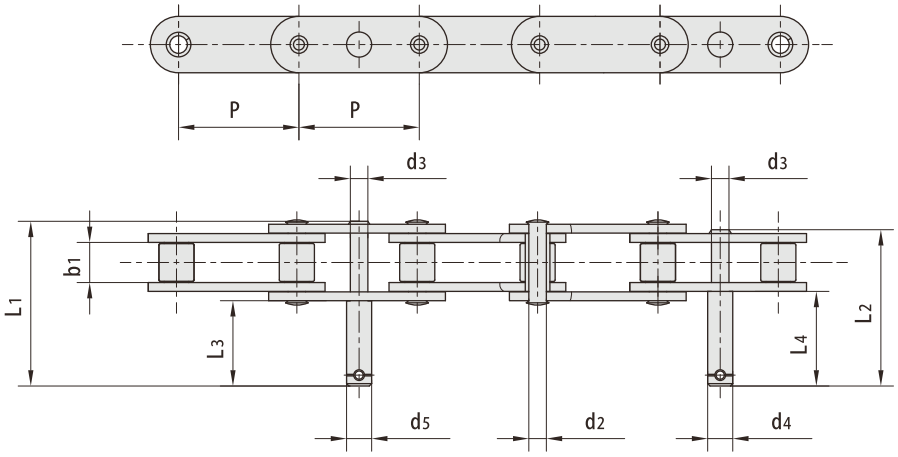

RBL chain number	P mm	b1 mm	d2 mm	d3 mm	d4 mm	d5 mm	L1 mm	L2 mm	L3 mm	L4 mm
C2120HSSF14G K	76.20	25.22	11.10	11.10	15.88	15.88	106.30	100.40	54.00	60.00

RBL chain number	P mm	H mm	a
08AF9SS	12.70	17.00	45°

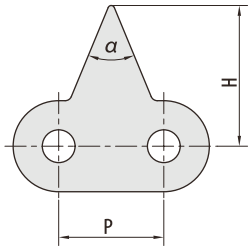

RBL chain number	P mm	H max mm	h mm
16AF44SS	25.40	30.30	50.00

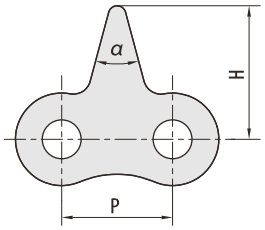

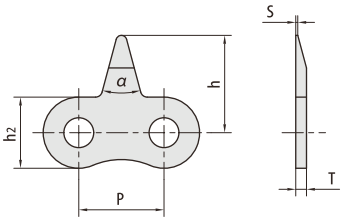

RBL chain number	P mm	H max mm	h mm
08BSS-941	12.70	15.80	10.30

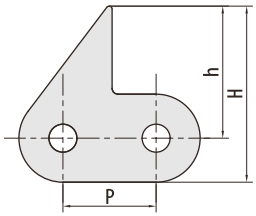

RBL chain number	P mm	H max mm	h mm
C20ASS-1STCF1	31.75	60.00	45.00

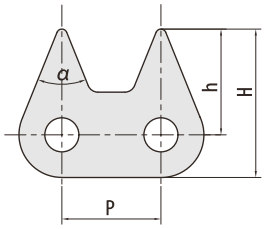

RBL chain number	P mm	H max mm	h mm	*a*
06BSS-2STC	9.525	14.30	10.20	44°

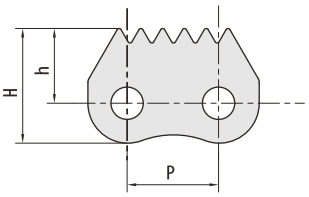

RBL chain number	P mm	h2 max mm	h mm	T mm	s mm	*a*
08BF30SS-1STA	12.70	10.60	14.50	1.60	0.30	30°

The standard of "Guidelines for the Selection of Roller Chain Drives" (GB/T 18150-2006 / ISO 10823:2004) had been issued. If you try to calculate the actual transmission power of chain, you must consider revising the transmission power of driving sprocket (input power).
Actual power(Corrected power)=input power×service factor× teeth factor
Service factor is listed in the following table.
Teeth factor = (19/Zs)1.08 (Zs—tooth number of the small sprocket)

: Service factor table Driving Mechanism Characteristic

RBL chain number	Smooth Running	Slight Vibration	Medium Vibration
Smooth Running	1.0	1.1	1.3
Medium Vibrati0n	1.4	1.5	1.7
Severe Vibrati0n	1.8	1.9	2.1

The chain factories with long history in the world have their own chain transmission power rating graph and power diagram. We can refer to the GB/T 18150-2006 / ISO 10823:2004 standard selecting the drive power or selecting chain according to the drive power, the condition is that we should know the tooth number of the small sprocket and its speed. Only if the actual power is within the range of rating power of the power rating graph, the selected chain is suitable.
Now we use the transmission part in walking tractor and the transmission power in rotary tillage to proof whether the chain selection is correct.

■ Chain drive part
Small sprocket speed ns=1351 r/min
Tooth number of small sprocket Zs=14
Actual power (Corrected power)=10.944hp=8.16kW
From B series horsepower rating graph, you will find selected 08B-2 chain is suitable.

■ Ratary tillage chain part
Small sprocket speed ns=199 r/min
Tooth number of small sprocket Zs=13
Actual power (Corrected power)=9.888hp=7.37kW
From A series horsepower rating graph, you will find selected 12A-2 chain is unsuitable. You should choose 16A-1 or 60H-2 heavy duty roller chain instead of 12A-2.

■ The main characteristics of this power graph are as follows:
For drive Zs=19
Chain length: 120 pitches
Transmission ratio: 1 : 3 to 3 : 1
Service life of chain: 15000 hours

: strands

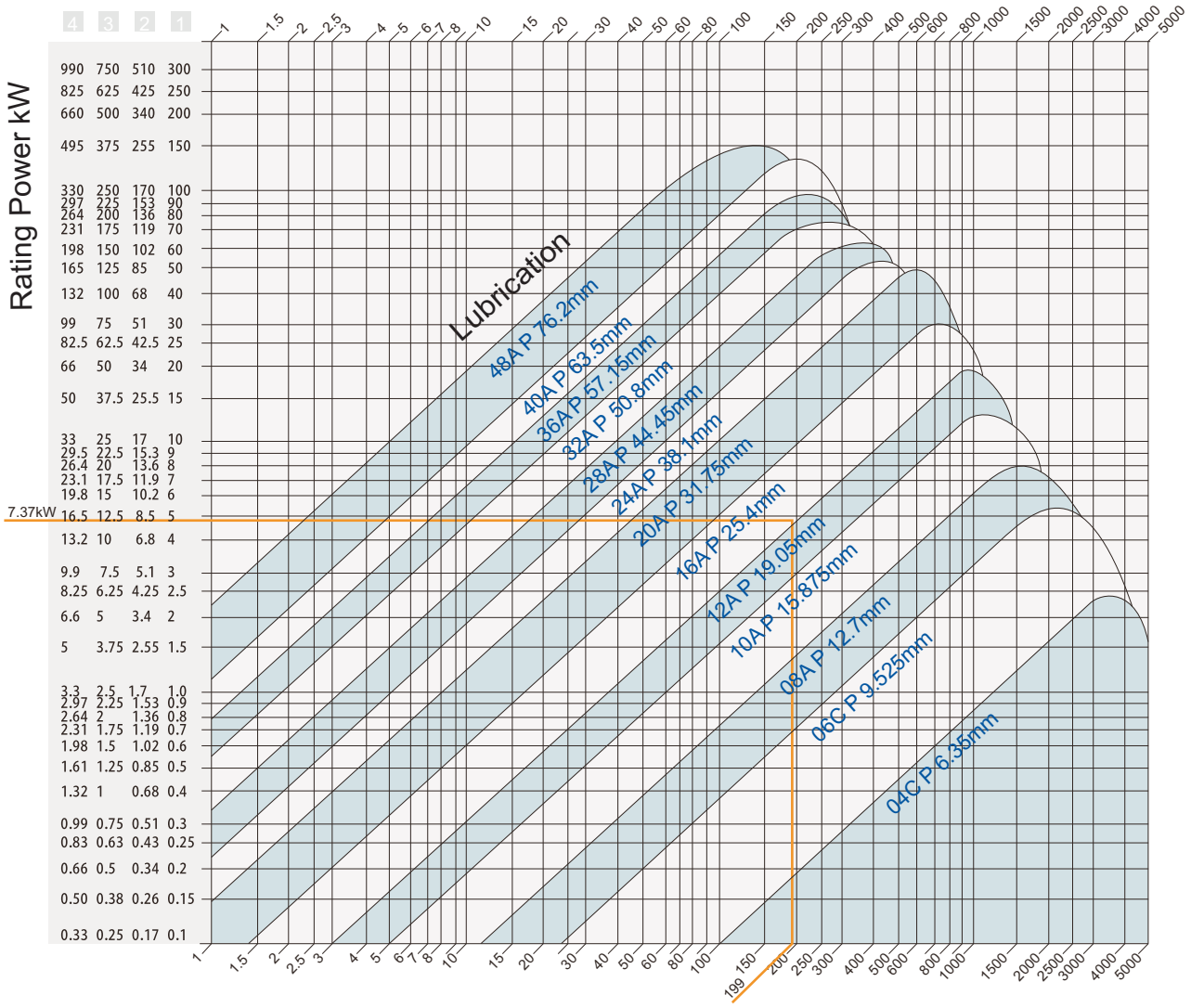

Note: The rating power of multiple strand chain can be obtained by multiplying the strand factor by the rating power of single strand chain.

Small Sprocket Speed (r/min)

: Strand factor table

Number of strand	1	2	3	4	5	6
Factor	1.0	1.7	2.5	3.3	4.1	4.9

■ The main characteristics of this power graph are as follows:
For drive Zs=19
Chain length: 120 pitches
Transmission ratio: 1 : 3 to 3 : 1
Service life of chain: 15000 hours

: strands

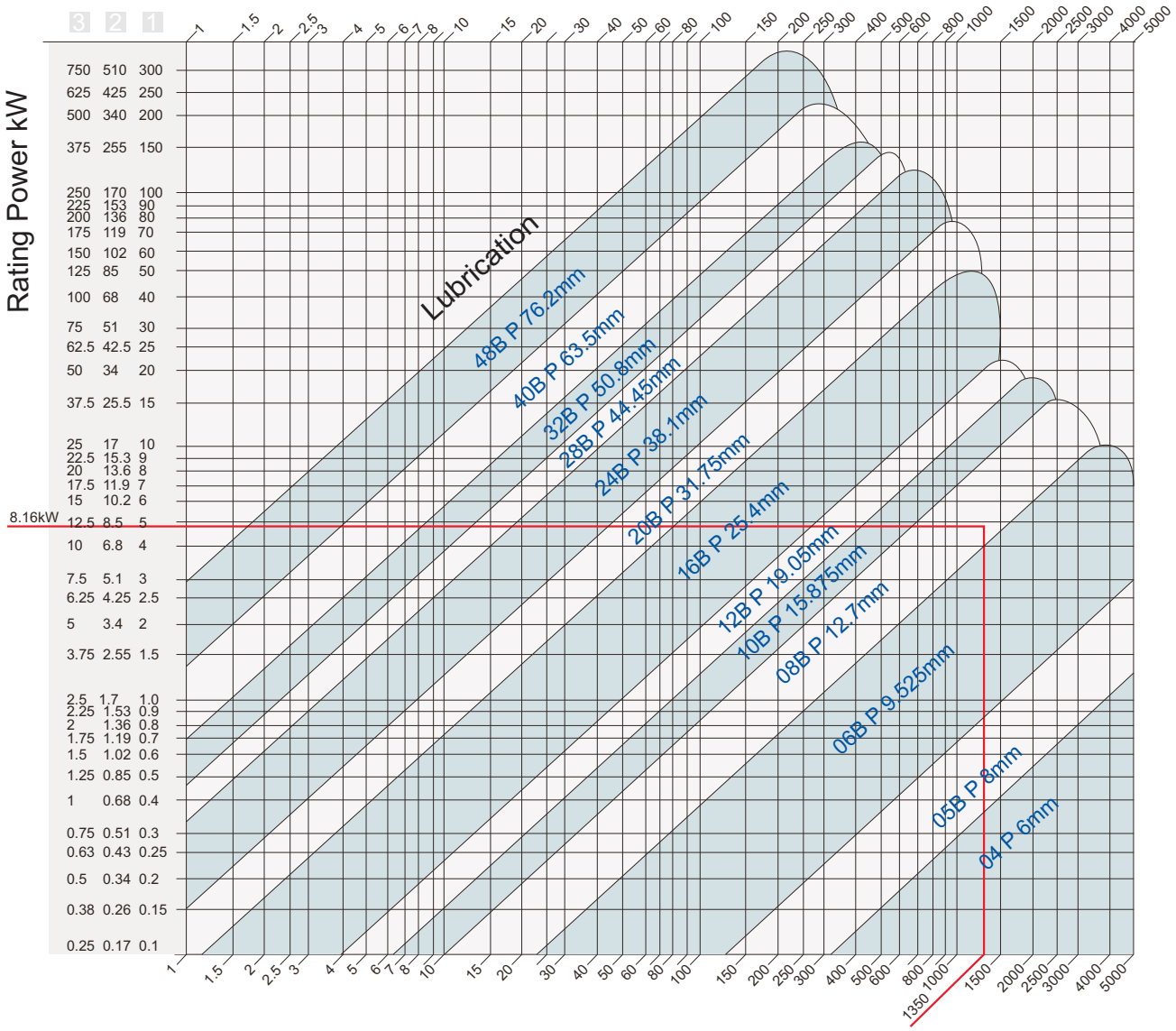

Note: The rating power of multiple strand chain can be obtained by multiplying the strand factor by the rating power of single strand chain.

: Strand factor table

Number of strand	1	2	3	4	5	6
Factor	1.0	1.7	2.5	3.3	4.1	4.9

■ Lubrication of chain depends on the working environment, temperature, chain speed and so on.

1. Influence of working environment
For open drive such as combine chain, swather chain etc., grease lubrication is recommended.
For closed drive such as walking tractor chain transmission case etc., oil lubrication is recommended.

2. Influence of temperature
Application in the temperature range of -5 to +60 is recommended.
In winter, lower viscosity oil is recommended;
But in summer, higher viscosity oil is recommended.

3. Influence of chain speed
The lubrication method is related to chain speed.
Refer to the following chart for details, please.

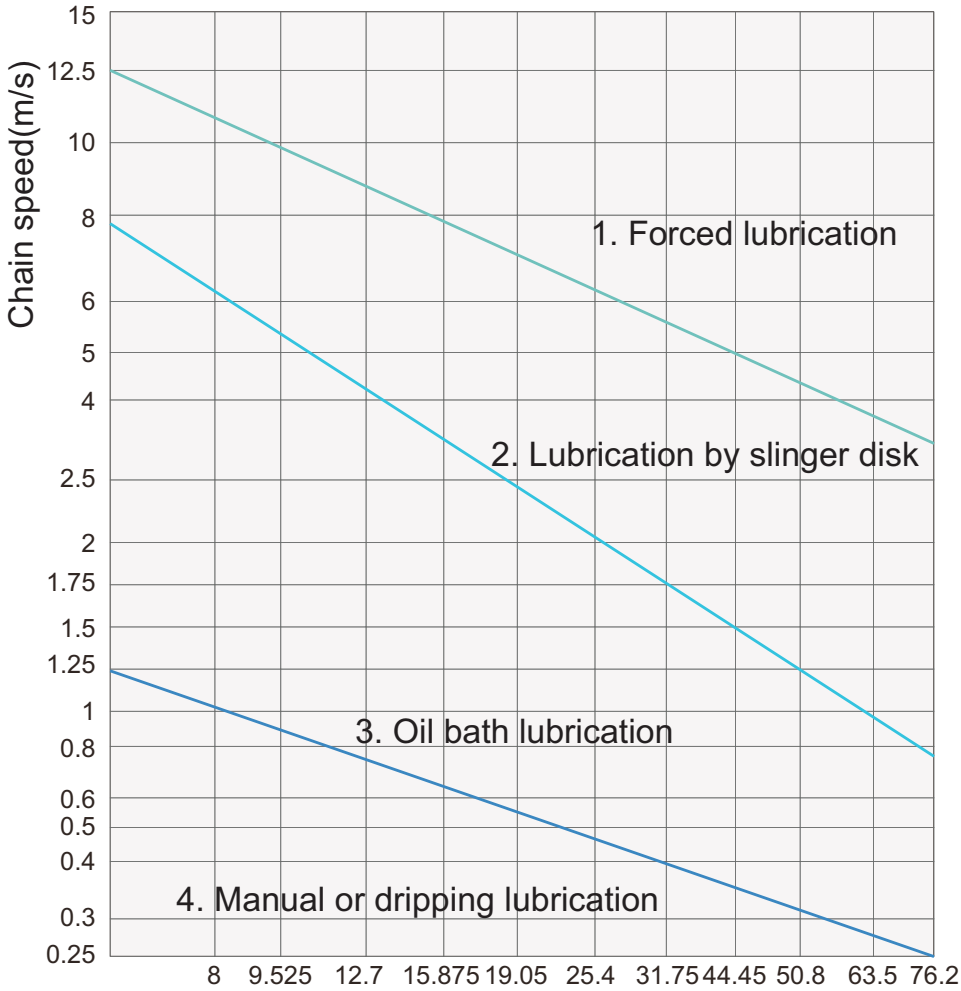

■ Lubrication

Wear is mainly caused by bearing pressure, angle-sliding movements of the pins and rotation of the rollers
etc.. Effective lubrication of the chain hinges is utmost important for reducing wear, power loss and noise etc. effectively.

Curve 1:
Without lubrication. Chain would be worn out and destroyed within a very short time.

Curve 2:
Optimum initial lubrication only. High wear would occur within a short time after the lubricant has been used up.

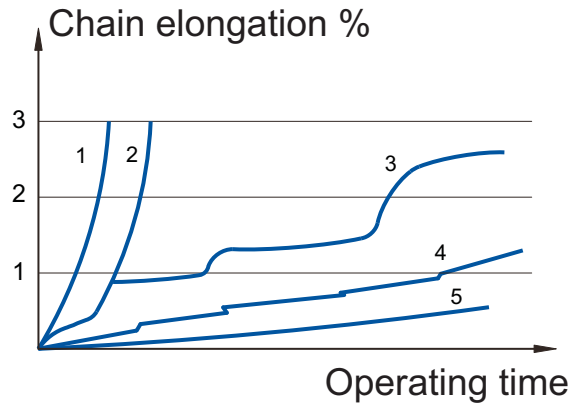

Curve 3:
Manual lubrication. Intermittent dry rub frequently occurs, especially when regular periodical relubrication is not well implemented

Curve 4:
Incorrect lubrication. Uneven chain wear results from incorrect lubrication.

Curve 5:
Correct lubrication. The right lubrication is the utmost important to obtain a optimum service life.

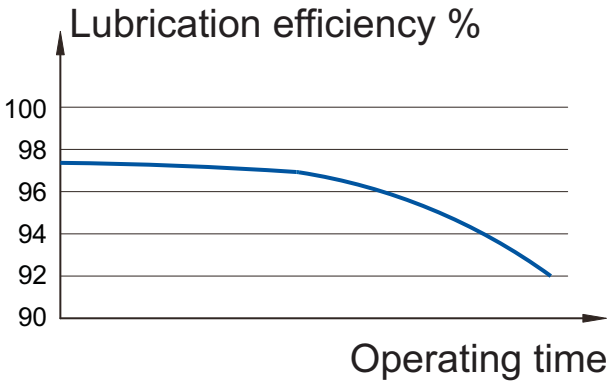

■ Lubrication and efficiency

Relubrication shall be done before discoloration of the rub surface which indicates the lubrication failure of the former lubrication.The specific lubrication intervals shall be determined by tests based on specific conditions and running conditions.

The right graph shows the efficiency of lubrication decrease with operating time.

■ Lubricant

First of all, the selection of an appropriate lubricant depends on the type of lubrication.

Just as the right diagram shows, low viscosity mineral oils are particularly suitable for chain drives.

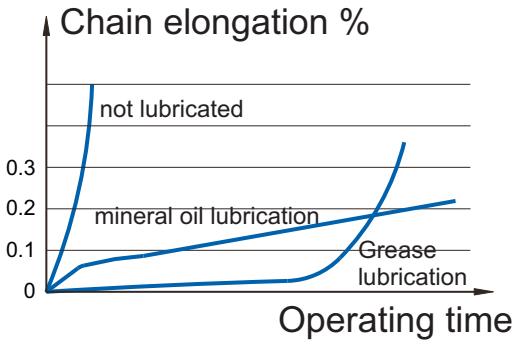

Recommended viscosity

Ambient temperature ℃	Viscosity of lubricant
-5℃～+25℃	N100 (ISO VG 100)
+25℃～+45℃	N150 (ISO VG 150)
+45℃～+60℃	N220 (ISO VG 220)

For higher temperatures (e.g. furnace chains) or severe operating conditions, mud spattering open-type etc. or heavy-duty low speed chains, graphite or molybdenum disulfide (MoS2) applied either as additive or spray will improve lubrication performance.

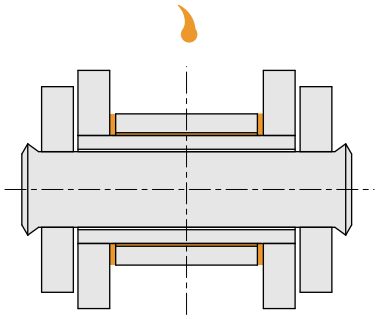

Low-viscosity or the grease products with a drop point of 70°C are also suitable for manual lubrication. Liquidized grease may be sprayed on the chains in special conditions and chains can start running immediately after the evaporation of the volatile carrier substance.

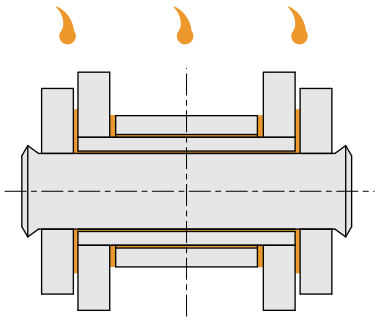

No matter which kind of lubricants and lubrication methods choosed, the most important issue is to ensure the lubricant flow into evenly (between pin and bush, between bush and roller).

■ Selection of lubrication method

Normally, there are five lubrication methods as below:

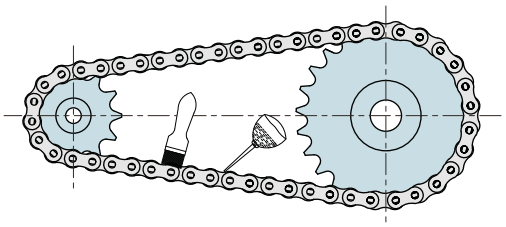

1. Manual lubrication
This type of lubrication by means of oil can and brush, which adding lubricant into the gap between outer and inner link plate of chain loose side periodically is not very safe and therefore this type lubrication only suitable for those chains with occasional operation or for those secondary drives and low chain speeds. Sufficient lubrication should take place at least once a day (if possible once every 8 running hours). Lubricant colouration should be avoided as far as possible.

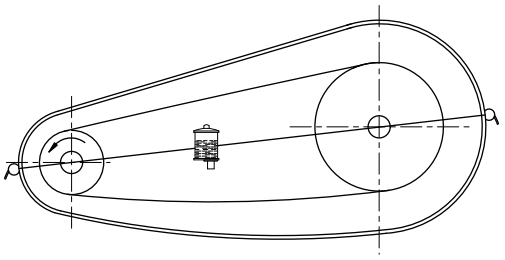

2. Drip lubrication
Drip lubrication by means of wick oilers, needle oilers or drip oilers is only suitable for low bearing pressure drives. Lubricant colouration should be avoided as far as possible.

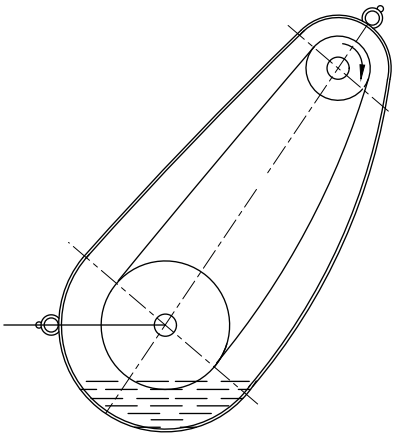

3. Oil bath lubrication (submerged lubrication)
There is just enough oil in a proper chain box for preventing the worn and elongated chain knocking against the casing wall to allow the chain plates to submerge into the bath up to the rollers or the bushings respectively. But immersion should not be too deep or too shallow .Too shallow immersion lubrication is not reliable. Too deep immersion may cause the oil to heat up and lead to untimely oxidation of the oil.

4. Oil-ring lubrication (splash lubrication)
With this type of lubrication, the chain operates above oil level.
A disk submerging into the lower oil level, the depth is about 12.7mm - 25.4mm, Peripheral velocity between min. 3m/s and max. 40m/s, normally not bigger than 12.5m/s, centrifuges oil against the casing walls from where it continuously runs down onto the chain via drip rails. The disk should be mounted on both sides of sprocket when the chain width above 127mm.

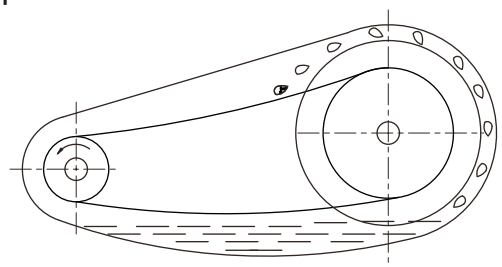

5. Force feed lubrication (pressure lubrication)
This type of lubrication is suitable for high-speed and heavy-duty type drives. Force feed lubrication is carried out to realize the circulating cooling of chains by means of oil pump and oil feeding pipe .The spray nozzles should be situated near the gearing places of chain and sprocket, and the nozzle number should be one more than the chain strands number to make them aim at the gap of each row link plate.

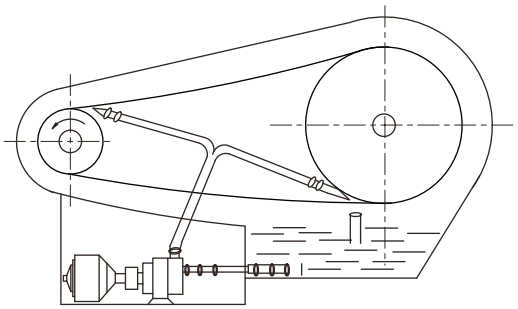

■ Maintenance for Roller Chain Drive

It's very practical to illustrate the conventional maintenance of roller chain drive because of its wide application in industry. Better maintenance, less failure. In practice, only following some simple maintenance principals, we can easily save costs and make its service life longer, and then making the operation more efficient.

1.Each sprocket in the driving system should have good coplanarity and the chain path should always be smooth.
2.The sagging of chain loose side should be suitable and for the adjustable center distance level and angle drive, the sagging should be 1%~2% of the center distance. For conditions of vertical drive and under vibration load, reverse drive and dynamic brake ,the sagging should be smaller. It' s very important to check and adjust the loose side sagging frequently in the chain drive maintenance.
3.Good lubrication is also very important. Whichever lubrication method you choose, the most important thing is to make the lubricating grease distribute evenly in each chain joint clearance. If not necessary, avoid selecting big viscosity heavy oil or lubricating grease since it will jam the clearances gone to joints friction surface with dust after a period of time.
Periodically clean the roller chain and check its lubrication condition frequently.
Disassembly the pin and bush, if necessary.
If the friction surface is brown or dust color, it may be caused by insufficient lubrication.
4.Chains and sprockets should be always in good condition.
5.Frequently check the working surface of sprocket teeth ,adjust or replace it when it's excessively worn.

Troubleshooting Instructions

Failure Symptom	Possible Causes	Actions
Very noisy	1. Unalignment of sprockets 2. Unsuitable loose side sagging 3. Bad lubrication 4. Chain box or bearing loose 5. Excessive wear of chain or sprocket 6. Wrong selection of chain type and too big pitch 7. Too small number of sprocket teeth	1. Realignment of sprockets 2. Make suitable adjustment of chain loose side sagging 3.Improve lubrication conditions 4. Fasten chain box or bearing 5. Replace worn chains or sprockets. 6. Reselect chain type and adopt smaller pitch 7. Add chain teeth number or redesign it
Chain jumps off from sprocket teeth	1. Chain is very loose which makes the sagging too big. 2. Excessive wear of chain or sprocket 3. Excessive overloading	1. Make suitable tensioning adjustment 2. Replace the chain or sprocket 3.Select high strength chain to avoid overloading
The chain can t be taken off from the sprocket.	1. Unalignment of sprocket 2. Excessive wear of sprocket	1. Realignment of sprocket 2. Replace it
Dead link of chain	1. Unalignment of sprocket 2. With foreign bodies in chain joints 3. Bad lubrication 4. Too big load 5. The corrosion of chain 6. The interferences between plates or attachments	1. Realignment of sprockets 2. Remove the foreign bodies of joints 3.Improve lubrication conditions 4. Reduce the load or adopt suitable chain 5. Choose anticorrosion chain 6. Check the interferences of chain

Failure Symptom	Possible Causes	Actions
Roller cracked or deformed	1.Too big chain pitch or too small number of sprocket teeth 2.Sprocket teeth have foreign bodies. 3. The chain climbs onto sprocket teeth too high. 4. Excessive chain impact load	1.Select small pitch chain or add sprocket teeth number 2. Remove all the foreign bodies or replace chain 3. Replace the chain and make appropriate tensioning 4. Reduce the impact of chain
Pin rotates or plate hole drawn long	1.Chain overloaded	1.Eliminate the overloading causes or adopt large specification chain
Pin broken or plate broken along the hole connecting line direction	1.Excessive overloading	1.Eliminate the overloading causes or adopt large specification or higher strength chain; if sprocket failure symptom found, replace it
Plates broken 	1.The load above chain dynamic capacity	1.Selecting big pitch chain or reduce dynamic load
Excessive side-wear of plates or sprocket teeth	1.Sprocket not coplanar or ending beat severely 2.Bad bearing stiffness of sprocket 3.Severe twist of chain	1.Increase machining and installation precision 2.Increase bearing parts stiffness 3.Replace chain
outer link outside rubbed	1. Chain not tensioned and jump, then to hit adjacent bodies 2. Chain box deformed or with foreign bodies inside	1. Make appropriate chain tensioning 2. Eliminate chain box deformation and remove foreign bodies
Pin worn or bush bonded with pin	1. Bad lubrication 2. Chain speed too high or chain overloaded	1.Supply suitable lubrication system 2.Lower the speed or reduce the load
Excessive wear of sprocket	1.Bad lubrication 2.Inferior material of sprocket and insufficient teeth surface hardness	1.Improve lubrication conditions 2.Improve sprocket material quality and its teeth surface hardness
Locking parts such as spring clip and cotter pin etc. become loose.	1. Chain wobbling heavily 2. Knock with obstructions 3. Locking parts wrong installed	1. Make suitable tensioning or consider adding supporting board for guide plate 2. Remove all obstructions 3.Improve the installation quality of locking parts

Part Number Index

Where to find each chain number

0 – 9

04BDR B7
04BH A11
04BNP B6
04BSS-1 O1
04BSS-2 O2
04BWSK2F1 D21
04BZP B5
04C D5
04CPSa G39
04CSS-1 O1
04CSS-2 O2
04CSS-3 O3
05B-1 A5
05B-2 A6
05B-3 A7
05BA1F1 D5
05BDR B7
05BF1 D31
05BF3 D31
05BF4 D38
05BF6 D38
05BNP B6
05BSA1F1 D12
05BSK1F2 D12
05BSS-1 O1
05BSS-2 O2
05BSS-3 O3
05BWSA2F D21
05BZP B5
05C C16
5ODR B7
06B D1, D2, D3, D4, D23, D24, F7
06B0-R B10
06B-1 A5
06B-2 A6
06B-2STCF2 G15
06B-3 A7
06B-D1F21 D43
06B-D4 D45
06BDR B7
06BF1 G5
06BF9 G34
06BF20 I1
06BF30-2 B3
06BF33SS O26
06BF37 G5
06BF39 G9
06BF40SS O26
06BH A11
06BK1F3 D5
06BK1F6 D5
06BK2F2 D15
06BNP B6
06BS D12
06BS-3-C15/P15 F7
06BSBF1 B23
06BSBFl B20
06BSK1F2 D12
06BSS O6, O8, O9
06BSS9.5 O7
06BSS-1 O1
06BSS-2 O2
06BSS-2STC O30
06BSS-3 O3
06BW D15
06BWSK0F D21
06BWSK2F D21
06BZP B5
06C D5, O26
06C-D1F12 D43
06C-D3F10 D46
06C-D3F12 D46
06CF2 D25
06CF5 D25
06CF6 D25
06CF7 D25
06CF8 D25
06CF9 D25
06CF15 D33
06CF20 D25
06CF23 D25
06CF25 D25
06CF25SB B17
06CF27 D33
06CF28 D33
06CF31SS O26
06CF34-2STC D25
06CF37SB B17
06CF40 B1
06CF44 D33
06CF45 D32
06CF46 D25
06CF47 D32
06CF50 D25
06CF51SS O27
06CK2F4 D15
06CPSa G39, G40
06CSA0 D12
06CSS O6, O8, O9, O18
06CSS9.5 O7
06CSS-1 O1
06CSS-2 O2
06CSS-3 O3
06CWSA2F D21
06D C16
06DF2-2 C16
06DF3-2 C16
06DTF1 C16
06DTF2 C16
08A5K0F1 D12
08A-1STCF10 G9
08A-2-D3F39 D48
08A-5STCF1 G14
08A-5STCF7 G14
08A-D1F32 D46
08A-D1F37 D43
08A-D1F48 D43
08A-D1F49 D43
08A-D2-F1 G4
08A-DD1F4 D45
08A-DD1F5 D47
08A-DD3F6 D45
08A-U1F1 D26
08AA1F1 D5
08AA1F2 D5
08AA1F3 D5
08AA1F6 D5
08AA1F7 D5
08AA1F9 D5, D23
08AA1F10 D5, D23
08AA1F11 D23
08AA1F12 D5, D23
08AA1F14 D5
08AA1F15 D5
08AA1F18 D5
08AF G8
08AF7 D26
08AF9-2 D26
08AF9SS O30
08AF10 G8, G9
08AF34 G4
08AF41 G5
08AF66 G9
08AHF A11
08AK1F2 D5
08AK1F4 D5
08AK1F16 D5
08AKK1F1 D23
08APSa G39, G40
08ASA1F2 D12
08ASA1F3 D12
08ASA1F4 D12
08ASAF1 D26
08ASAF2 D32
08ASAF3 D26
08ASS O6, O8, O9, O18
08ASS-1 O1
08ASS-2 O2
08ASS-3 O3
08AW D15
08AWSA2F D21
08B D1, D2, D3, D4, D23, D24, D39, D42
08B0-R B10
08B-1 A5
08B-1STCF22 G9
08B-1STCF23 G9
08B-1STCF28 G9
08B-1STCF30 G16
08B-2 A6, N1
08B-2-D1F39 D47
08B-2STCF2 G17
08B-3 A7
08B-4STCF1 G17
08B-5STCF1 G14
08B-5STCF3 G16
08B-5STCF4 G16
08B-5STCF5 G14
08B-25TCF1 G16
08B-940 G3
08B-D1F53 D43
08B-D1F60 D46
08B-D1F67 D43
08B-D1F70 D50
08B-D1F74 D43
08B-D1F75 D50
08B-D1F79 D43
08B-D1F80 D43
08B-D3F40 D46
08B-D3F79-2 D47
08B-D3F95 D43
08B-D3F101 D43
08B-D4 D43
08B-D7 D43
08B-D8 D45
08B-d53 D38
08B-DD3F9-B D45
08B-DD3F13 D45
08B-DD3F14 D45
08B-DD3F17-2 D52
08B-G1 G28
08B-G1F1 G30
08B-G1F4 G30
08B-G1F14-DD3 G30
08B-G1F15 G32
08B-G1F17 G31
08B-G2 G28
08B-G2F1 G30
08B-G2F15 G30
08B-G2F22 G30
08B-GC I2
08B-TP I18
08BA1F2 D5
08BA1F6 D6
08BA1F8 D6
08BA1F11 D5
08BA1F16 D5
08BA1F18 D5
08BA1F20 D5
08BA1F28 D5
08BA1F30 D5
08BA1F33 D5
08BA1F34 D5
08BA1F39 D6
08BA1F40 D6
08BA1F41 D6
08BA1F45 D15
08BA1F47 D6
08BA1F48 D6
08BA1F49 D6
08BA1F51 D6
08BA1F52 D12
08BA1F53 D6
08BA1F56 D6
08BA1F58 D6
8BA2F41 D35
08BA3F1 D6, D39
08BA3F2 D39
08BDR B7
08BF B3
08BF3 D43
08BF5 G9
08BF7 D45
08BF11 G5
08BF21 G4
08BF24 D39
08BF25 G8
08BF29 G8
08BF30 D6, G8, G9
08BF30SS-1STA O30
08BF30WK2 D15
08BF33 D6
08BF35 G8
08BF37 D41
08BF38 G9
08BF44 G5
08BF51 G9
08BF56 G9
08BF61 D38
08BF66SS O26
08BF67 G8
08BF71 G6
08BF86 G9
08BF90 G8
08BF128 G7
08BF140 G9
08BF141 G9
08BF161 G17
08BF169 D40
08BF195 G8
08BF200 B17
08BF207 D40
08BG1F16 G33
08BG2F11 G33
08BG2F14 G34
08BG2F16 G34
08BG2F17 G34
08BG2F18 G33
08BH A11
08BHP I20
08BHPF I20
08BHPF2 I27
08BHPF2SS O16
08BHPF3 I27
08BHPF3SS O16
08BHPF5 I20
08BHPF5SS O14
08BHPF7 I20
08BHPF8 I27
08BHPF9 I20
08BHPFSS O14
08BHPSS O14
08BHSK1F1 D12
08BK1F5 D6
08BK1F7 D6
08BK1F9 D6
08BK1F10 D6
08BK1F14 D6
08BK1F15 D6
08BK1F26 D6
08BK1F29 D6
08BK1F35 D6
08BK1F43 D6
08BK1F44 D6
08BK1F54 D6
08BK1F55 D6
08BK1F57 D6
08BK2F30 D15
08BN D52
08BNP B6
08BPSa G39, G40
08BS F1
08BS-3-45-C16 F7
08BS-3-45-C17 F7

08BS-3-45-C20 F7
08BS-27-P16X16 F1
08BS-33-C16 F1
08BSA0F1 D12
08BSA1F1 D12
08BSA1F8 D12
08BSA1F9 D12
08BSA1F18 D39
08BSA1F19 D12
08BSA1F32 D12
08BSB B20
08BSBA1F1 B23
08BSBF1 B20
08BSBF5 B22
08BSBF7KK2 B22
08BSBK1 B23
08BSF1-3-45-C17 F7
08BSF6-3-45-C20 F7
08BSK0F2 D38
08BSK0F4 D12
08BSK0F7 D12
08BSK1F2 D12
08BSK1F3 D12
08BSK1F4 D13
08BSK1F5 D13
08BSK1F6 D13
08BSK1F7 D13
08BSK1F12 D12
08BSK1F22 D12
08BSK1F34 D12
08BSLR-2 B9
08BSLR-3 B9
08BSLRF1 B9
08BSR2F1-P F5
08BSS O6, O8, O9, O18
08BSS1 O7
08BSS-1 O1
08BSS-2 O2
08BSS-3 O3
08BSS-941 O30
08BSSF11 G9
08BSSF20 O26
08BSSF32 I3
08BSSF74 O26
08BU1 G35
08BU1F1(a G36
08BU2 G35
08BU2F2 G36
08BU2F9 G35
08BW D15
08BWK2F3 D16
08BWK2F4 D16
08BWK2F5 D16
08BWK2F27 D16
08BWK2F28 D16
08BWK2F29 D16
08BWK2F32 D16
08BWK2F39 D16
08BWK2F40 D16
08BWSA0F D21
08BWSA1F D21
08BWSA2F D21
08BWSK2F1 D21
08BWSK2F2 D21
08BWSK2F3 D21
08BWSK2F4 D21
08BWSK2F8 D21
08BWSK2F13 D21
08BZP B5
10A(W)A2F1 D16
10A-2-D3F67 D47
10A-D1F31 D43
10A-D1F32 D43
10A-D1F36 D43
10A-D1F40 D43
10A-D1F43 D43
10A-D1F48 D43
10A-D3F44 D43
10A-D9 D43
10A-DD3F2-2 D48
10A-DD3F3 D45
10A-DD3F4 D45
10A-G1 G28
10A-G1F6 G31
10AA1F10 D6
10AA1F11 D6
10AA1F13 D7
10AA2F1 D7
10AF G8
10AF7 G9
10AF8 G4
10AF12 D27
10AF17 D30
10AF25 D30
10AF41-2 G6
10AF50 B1
10AF60 D36
10AF61 G9
10AF65 D36
10AF66 D36
10AF67 D36
10AF70 D36
10AF72 D35
10AF73 D35
10AF78 G5
10AF94 D49
10AHK1F1 D7
10AHK1F2 D7
10AK1F3 D7
10AK1F5 D7
10AK1F7 D7
10AK1F8 D7
10AK1F9 D7
10AK1F23 D7
10AK1F24 D7
10APSa G39, G40
10ASA0F1 D29
10ASA0F2 D13
10ASA1F8 D13
10ASD N4
10ASK1F1 D13
10ASK1F3 D13
10ASK1F6 D13
10ASS O6, O8, O9, O18
10ASS-1 O1
10ASS-2 O2
10ASS-3 O3
10AU1 G35
10AU1F3 G35
10AU2F1 G36
10AW D33
10AWA1F2 D16
10AWA1F6 D16
10AWA2F1 D16
10AWK1F1 D16
10AWK1F2 D16
10AWSA0F D21
10AWSA1F D21
10AWSK2F D21
10B D1, D2, D3, D4, D23, D24, D42
10B0-R B10
10B-1 A5
10B-1STCF3 G9
10B-1STCF4 G9
10B-2 A6
10B-3 A7
10B-D1F27 D53
10B-D1F31 D43
10B-D1F39 D43
10B-D1F42 D43
10B-D1F45 D43
10B-D1F46 D46
10B-D1F49 D46
10B-D1F56 D46
10B-D3F50 D43
10B-D7 D43
10B-D9 D53
10B-D12 D53
10B-DD1F41 D45
10B-G1 G28
10B-G1F2 G30
10B-G1F3 G30
10B-G1F4 G30
10B-G1F5 G31
10B-G2 G28
10B-G2F1 G31
10B-G2F5 G28
10B-G2F6 G32
10B-GC I3
10B-TP I18
10BA0F2 D7
10BA0F3 D7
10BA1F3SB B23
10BA1F5SB B23
10BA1F11 D7
10BA1F13 D7
10BA1F14 D7
10BDR B7
10BF2 D43
10BF3 D43
10BF11 D7
10BF19 B3
10BF20 B3
10BF40 G9
10BF50 G8
10BF68 B3
10BF88 B3
10BH A11
10BHB I22
10BHF1 A11
10BHPF1 I27
10BHPF2 I27
10BHPF3 I20
10BHPF3SS O14
10BHPF4 I20
10BHPF9SS O16
10BHPSS O15
10BK0F4 D7
10BK0F5 D7
10BK1F2 D7
10BK1F3 D7
10BK1F4 D7
10BK1F5 D7
10BK1F6 D7
10BK1F7 D7
10BK1F8 D7
10BK1F12 D7
10BK1F17 D7
10BK1F18 D7
10BK1F19 D7
10BK1F21 D7
10BK1F22 D7
10BNP B6
10BPSa G39, G40
10BSA1F3 D13
10BSB B20
10BSBA1F2 D7
10BSBF1 B24
10BSBF3-2STC B22
10BSDF1 N4
10BSK1F5 D13
10BSK2F5 D21
10BSLR B9
10BSLR-2 B9
10BSLR-3 B9
10BSLRF1 B9
10BSS O6, O8, O9, O18
10BSS1 O7
10BSS-1 O1
10BSS-2 O2
10BSS-3 O3
10BU1 G35
10BU1F1(a G36
10BU1F7 G35
10BU1F8 G35
10BU2 G35
10BU2F2 G35
10BU2F3 G36
10BWA1F1 D16
10BWA2F2 D16
10BWK1F4 D16
10BWK2F2 D16
10BWK2F3 D16
10BWK2F4 D16
10BWK2F8 D16
10BWK2F9 D16
10BWK2F10 D16
10BWSK2F6 D21
10BZP B5
12A-1STCF2 G9
12A-1STCF4 G14
12A-1STCF6 G14
12A-1STCFI G9
12A-2 N1
12A-2-D3F47 D47
12A-2-D3F48 D47
12A-D1F30 D43
12A-D1F33 D50
12A-D1F36 D43
12A-D1F37 D43
12A-D1F38 D49
12A-D1F39 D49
12A-D1F41 D43
12A-D1F42 D49
12A-D1F46 D43
12A-D1F52 D50
12A-D1F53 D43
12A-D1F54 D43
12A-D1F55 D43
12A-D1F57 D50
12A-D1F60 D46
12A-D1F61 D43
12A-D1F66 D50
12A-D1F72 D43
12A-D1F73 D50
12A-D1F77 D44
12A-D1F79 D44
12A-D1F80 D44
12A-D3F32 D53
12A-D3F44-2 D47
12A-D3F48 D51
12A-D3F85-2 D47
12A-D7 D45
12A-DD3F3 D45
12A-DD3F5 D45
12A-DD3F6 D45
12A-DD3F7 D45
12A-G1 G28
12A-G1F12 G31
12A-G2 G28
12A-G2F12 G31
12AA1F D8
12AA2F D8
12AAA1F1 D34
12AAA1F2 D34
12AAA1F3 D34
12AF D30
12AF1-G1 G28
12AF7 D27
12AF8 D27
12AF17 D27
12AF19 D53
12AF33 G8
12AF63-2 B1
12AF86-2 B1
12AF90-3-71-C28 F7
12AF91 G7
12AF99 D16
12AF105 B1
12AF107-3-71-C28 F7
12AF108 D53
12AF117 D37
12AF127-3-P29 F7
12AG1F1 G33
12AH-TB I4
12AH-TB35 I4

12AH-TB35F1 I4
12AHBF2 I22
12AHF A11
12AHF27 D29
12AHF30 D30
12AHW D17
12AK0F1 D34
12AK1F D8
12APSa G39, G40
12AS F7
12ASA1 D27
12ASA1F4 D13
12ASAA1F1 D24
12ASD N4
12ASDF3 N4
12ASDF6 N4
12ASDF9 N4
12ASDF12 N4
12ASK1F1 D13
12ASLR-3 B8
12ASS O6, O8, O9, O18
12ASS-1 O1
12ASS-2 O2
12ASS-3 O3
12AU2F3 G35
12AW D17, G32
12AWSA0F D21
12AWSA2F D21
12AWSK1F D21
12AWSK2F D21
12B D1, D2, D3, D4, D23, D24, D42, F1
12B0-R B10
12B-1 A5
12B-1STCF1 G8
12B-1STCFl G9
12B-2 A6
12B-3 A7
12B-910 G3
12B-911 G6
12B-D1F42 D44
12B-D1F43 D44
12B-D1F51 D44
12B-D1F55 D44
12B-D1F58 D53
12B-D1F77 D44
12B-D1F78 D50
12B-D1F81 D44
12B-D1F85 D44
12B-D1F86 D46
12B-D1F94 D44
12B-D1F100 D44
12B-D1F106 D44
12B-D3F47 D44
12B-D3F87 D44
12B-D3F105 D44
12B-d5 D44
12B-D6 D44
12B-D7 D44
12B-D8 D53
12B-DD1F1 D45
12B-DD1F5 D50
12B-DD3F3 D45
12B-DD3F6 D45
12B-DD3F7 D45
12B-G1 G28
12B-G1F11 G31
12B-G2 G28
12B-G2F5 G31
12B-G2F6 G31
12B-G2F10 G31
12B-K188 D41
12B-TP I18
12BA0F D8
12BA1F D8
12BDR B7
12BF3 G3
12BF12 B3
12BF13 D53
12BF14 B3
12BF42WK2 D17
12BF45-3-C28/P28 F7
12BF55-2 B3
12BF58 B3
12BF99 B3
12BF102 D53
12BFK1 D8
12BG1F1 G33
12BG1F13 G33
12BG2F3 G34
12BG2F4 G33
12BG2F8 G34
12BG2F13 G33
12BH A11
12BHF1 A11
12BHF2 A11
12BHF3 A11
12BHF5 A11
12BHP I22
12BHPF1 I27
12BHPF1SS O16
12BHPF2 I20
12BHPF3 I20
12BHPF6SLR I22
12BHPF8SS O16
12BHPF9 I27
12BHPF10 I22
12BHPSS O15
12BK1F D8
12BK1F4 D9
12BK1F5 D9
12BK1F6 D9
12BK1F8 D9
12BK1F9 D9
12BK1F20 D9
12BK1F24 D9
12BK1F27 D9
12BK1F28 D9
12BK1F29 D9
12BK1F31 D9
12BK1F32 D9
12BK1F33 D9
12BK1F37 D9
12BK1F38 D9
12BK1F40 D9
12BK1F41 D9
12BNP B6
12BPSa G39, G40
12BS F1
12BS3-40-C27/P27 F6
12BS3F1-48-C26 F6
12BS-3-62-C24 F7
12BS-3-62-C26 F7
12BS-3-62-C28/P28 F7
12BS-3-62-C31 F7
12BS-40-P28X F1
12BS-43-P26X F1
12BS-43-P28X F1
12BS-48-P26/C26 F1
12BS-48-P28/C28 F1
12BS-58-P28X F1
12BSA1F3 D13
12BSA1F4 D13
12BSB B20
12BSF5-4O-C28 F2
12BSF5-43-C26 F2
12BSF5-43-P28X28 F2
12BSF5-48-C24 F2
12BSF8-4O-C28 F2
12BSF10-3-62-C26 F7
12BSF10-3-62-C28 F7
12BSK0F1 D13
12BSK0F4 D13
12BSK1F1 D13
12BSK1F2 D13
12BSK1F6 D13, D21
12BSK1F7 D13
12BSK2F1 D21
12BSLR B9
12BSLR-2 B9
12BSLR-3 B9
12BSLRF1 B9
12BSS O6, O8, O9, O18
12BSS1 O7
12BSS-1 O1
12BSS-2 O2
12BSS-3 O3
12BU1 G35
12BU1F10 G36
12BU2 G35
12BU2F7 G36
12BV A11
12BW D17, D39
12BWK1F D18
12BWK2F D18
12BWSK0F8 D21
12BWSK0F10 D21
12BWSK2F2 D22
12BWSK2F3 D22
12BWSK2F4 D22
12BWSK2F5 D22
12BWSK2F6 D22
12BZP B5
14BF1 B3
16A(FQ)-1 B13
16A(FQ)-2 B13
16A(FQ)-3 B13
16A-1STCF3 G15
16A-1STCF4 G9
16A-1STCF5 G9
16A-1171 G11
16A-D1F25 D50
16A-D1F35 D44
16A-D1F36 D51
16A-D1F42 D50
16A-D1F51 D50
16A-D1F53 D44
16A-D1F55 D44
16A-D1F58 D50
16A-D1F61 D52
16A-D1F63 D50
16A-D1F67 D44
16A-D1F69 D44
16A-D1F70 D50
16A-D1F72-2 D51
16A-D1F73 D44
16A-D1F77 D50
16A-D3F2 D44
16A-D3F22 D44
16A-D3F48 D44
16A-DD1F2 D45
16A-DD1F3 D47
16A-DD1F4 D45
16A-DD1F6 D45
16A-G1 G28
16A-G1F1 G31
16A-G1F3 G32
16A-G2 G28
16A-G2F1 G31
16A-G2F3 G30
16AA1F4 D9
16AA1F12 D9
16AA1F19 D9
16AA1F36 D9
16AA1F43 D9
16AA2F D18
16AA2F1 D35
16AF D28
16AF1 G3
16AF1-D3F1 D44
16AF6 D28
16AF7 I12
16AF8 D28
16AF10 I13
16AF18 I14
16AF21 D29
16AF27 I10
16AF44 G9
16AF44SS O30
16AF52 B1
16AF62 B1
16AF73 I12
16AF86 I10
16AF90 I9
16AF93 B2
16AF94 B2
16AFT-1 B14
16AFT-2 B14
16AFTZ-3 B14
16AHA1F1 D9
16AHA1F2 D34
16AHK1F10 D9
16AHK1F11 D9
16AHK1F12 D9
16AK1F2 D9
16AK1F3 D9
16AK1F10 D9
16AK1F14 D9
16AK1F17 D9
16AK2F D18
16ALT-1 M27
16ALT-2 M27
16APSa G39, G40
16ASAF1 D14
16ASAF2 D14
16ASLR B15
16ASS O6, O8, O9, O18
16ASS-1 O1
16ASS-2 O2
16ASS-3 O3
16AU1 G35
16AU1F7 G36
16AU2F8 G37
16AU2F9 G37
16AW D14
16AWA2F D18
16AWK0F D18
16AWK1F D18
16AWK2F D18
16AWSK1F3 D22
16AWSK1F4 D22
16AWSK1F5 D22
16AWSK1F6 D22
16AWSK2F1 D22
16B D1, D2, D3, D4, D23, D24, D42
16B0-R B10
16B(FQ)-1 B13
16B(FQ)-2 B13
16B-1 A5
16B-1STCF3 G18
16B-1STCF6 G5
16B-2 A6
16B-2-1172F1 G15
16B-2STCF1 G10
16B-3 A7
16B-5STCF3 G11
16B-5STCF4 G11
16B-5STCF5 G11
16B-6STC G10
16B-1170 G3
16B-1172 G3
16B-1180 G10
16B-1185 G10
16B-1187 G6
16B-BF1 B3
16B-D D50
16B-D1F11 D46
16B-D1F32 D50
16B-D1F34 D44
16B-D1F38 D44
16B-D1F39 D51
16B-D1F43 D44
16B-D1F44 D46
16B-D1F48 D44
16B-D1F52 D50
16B-D3F30 D44

16B-D3F56 D44
16B-D3F59 D46
16B-DD1F9 D45
16B-DD1F13 D45
16B-DD3F4 D45
16B-DD3F10 D45
16B-G1 G30
16B-G1F11-DD3 G30
16B-G1F12 G28
16B-G1F18 G31
16BDR B7
16BF1 B3
16BF2 B3
16BF4 D45
16BF5 B3, G10
16BF6 G10
16BF9 G38
16BF10 I9
16BF11 D41
16BF12 I10
16BF24 G11
16BF26 N1
16BF27 I9
16BF33 B3
16BF45 G6
16BF57 I9
16BF92 B3
16BF95 D22
16BF97-STC G5
16BF109 D40
16BF120 D40
16BF121NP D40
16BF137 B3
16BG1F7 G33
16BH A11
16BH0-R B10
16BHBF1 I22
16BHBF1SS O15
16BHBF4 I22
16BHBSS O15
16BHF3 A11
16BHPF1 I27
16BHPF3 I20
16BHPF4 I20
16BK1F3 D10
16BK1F4 D10
16BK1F5 D10
16BK1F10 D10
16BK1F11 D10
16BK1F13 D10
16BK1F15 D10
16BK1F16 D10
16BK1F17 D10
16BK1F19 D10
16BK1F22 D10
16BK1F28 D10
16BK1F34 D10
16BK1F41 D10
16BK1F42 D10
16BK1F43 D10
16BK1F44 D10
16BK1F45 D10
16BK1F46 D10
16BK1F47 D10
16BK1F48 D10
16BK1F49 D10
16BK1F52 D10
16BK1F53 D10
16BK1F54 D10
16BK1F56 D10
16BNP B6
16BPSa G39, G40
16BS-65-C24 F3
16BS-65-P38/C38 F1
16BSA1F6 D14
16BSB B20
16BSBF3 B20
16BSBSS O25
16BSF2-65-C38 F2
16BSK1F2 D14
16BSK1F3 D14
16BSK1F7 D14
16BSK1F8 D14
16BSK1F9 D14
16BSK1F10 D14
16BSK1F11 D14
16BSLR B9, B15
16BSLR(FQ)-2 B15
16BSLR-2 B9
16BSLRF1 B9
16BSLRF4 B9
16BSS O6, O8, O9, O18
16BSS2 O7
16BSS-1 O1
16BSS-2 O2
16BSS-3 O3
16BU1 G35
16BU1F3 G36
16BU1F4 G36
16BU1F10 G36
16BU2 G35
16BU2F1 G36
16BU2F2 G37
16BU2F3 G37
16BU2F4 G35
16BU2F5 G36
16BU2F7 G37
16BU2F8 G35
16BU2F10 G35, G37
16BW D14, D19
16BWA1F D18
16BWA2F D18
16BWK1F D19
16BWK1F3 D19
16BWK1F4 D19
16BWK1F5 D19
16BWK1F21 D19
16BWK1F25 D19
16BWK1F26 D19
16BWK1F27 D19
16BWK1F31 D19
16BWK1F35 D19
16BWK1F36 D19
16BWK2F1 D19
16BWK2F3 D19
16BWK2F5 D19
16BWK2F6 D19
16BWK2F8 D19
16BWK2F10 D19
16BWK2F13 D19
16BWK2F23 D19
16BWK2F28 D19
16BWK2F31 D19
16BWK2F32 D19
16BWK2F33 D19
16BWK2F38 D19
16BWK2F39 D19
16BWS D22
16BWSK0F9 D22
16BWSK2F5 D22
16BWSK2F7 D22
16BWSK2F8 D22
16BWSK2F9 D22
16BWSK2F10 D22
16BWSK2F15 D22
16BWSK2F16 D22
16BZP B5
16SB-3-100-C38 F7
20A(FQ)-2 B13
20A(FQ)-3 B13
20A-1STCF1 G9
20A-2STCF1 G10
20A-2STCF3 G10
20A-D D48
20A-D1F7 D50
20A-D1F8 D50
20A-D1F11 D44
20A-D1F15 D53
20A-D1F17 D52
20A-D1F19 D44
20A-D1F21 D44
20A-DD3F3 D45
20A-DD3F4 D45
20A-G1 G28
20AF D31
20AF1 G12
20AF2 D28
20AF21 D31
20AF22 B2
20AF26 B2
20AF31-5 B2
20AF39-G1 D37
20AFT-2 B14
20AFT-3 B14
20AHA2F2 D20
20AHF42 D37
20AK1F3 D11
20AK1F4 D11
20AK1F5 D11
20AK1F7 D11
20AK1F9 D11
20ALT-1 M27
20ALT-2 M27
20ALT-3 M27
20ASK1F1 D29
20ASK4F1 D35
20ASLR-3 B8
20ASS O6, O8, O9, O18
20ASS316-D1F9 O29
20ASS-1 O1
20ASS-2 O2
20ASS-3 O3
20AWA2F4 D20
20AWSK1F2 D22
20AWSK1F3 D22
20B D1, D2, D3, D4, D23, D24, D42
20B0-R B10
20B(FQ)-1 B13
20B(FQ)-2 B13
20B-1 A5
20B-2 A6
20B-3 A7
20B-6STC G12
20B-6STCF1 G11
20B-1310 G11
20B-1350 G11
20B-D3F10 D44
20B-DD1F3 D49
20B-G1 G28
20B-G1F1 G31
20B-G1F2 G30
20BA1F6 D11
20BA2F7 D11
20BDR B7
20BF2 D41, G35
20BF6 G38
20BF8 G11
20BF14 B3
20BF19 B3
20BF40 B4
20BF46 D41
20BF47 D40
20BF48 B4
20BF55 B4
20BH A11
20BHF1 A11
20BK1F2 D11
20BK1F4 D11
20BK1F5 D11
20BK1F7 D11
20BK1F8 D11
20BNP B6
20BSK0F1 D34
20BSK1F1 D14
20BSLR(FQ)-2 B15
20BSS O6, O8, O9, O18
20BSS3 O7
20BSS-1 O1
20BSS-2 O2
20BSS-3 O3
20BU1 G35
20BU1F3 G36
20BWK2F1 D20
20BWK2F2 D20
20BWK2F3 D20
20BWKIFl D20
20BWSK2F2 D22
20BWSK2F3 D22
20BZP B5
24A(FQ)-2 B13
24A-1-STC G11
24A-2-D1Fl D48
24A-D1F13 D49
24A-D1F14 D49
24A-D1F16 D44
24A-D1F19 D50
24A-D3F9 D49
24A-D3F10 D49
24A-DD1F2 D47
24A-G1F1 G31
24AA1F1 D11
24AA1F3 D11
24AA1F10 D11
24AA1F12 D11
24AA1F14 D11
24AF5-4 B2
24AF18-2 B2
24AF19 B2
24AF20-2 B2
24AFTZ-2 B14
24AFTZ-3 B14
24AK1F4 D11
24AK1F6 D11
24AK1F7 D11
24AK1F11 D11
24AK2F1 D20
24AK2F2 D20
24AK2F4 D20
24AK2F6 D20
24ALT-1 M27
24ALT-2 M27
24ASK1F3 D14
24ASK1F4 D14
24ASLR B15
24ASS O6, O8, O9, O18
24ASS-1 O1
24ASS-2 O2
24ASS-3 O3
24AWSK2F1 D22
24B D1, D2, D3, D4, D23, D24, D42
24B(FQ)-2 B13
24B(FQ)-3 B13
24B-1 A5
24B-2 A6
24B-3 A7
24B-1805 G12
24B-1807 G12
24B-1809 G12
24B-1810 G10
24B-D3F2 D44
24B-DD1F2 D49
24B-DD1F3 D45
24B-DD1F4 D49
24B-G1 G28
24B-G1F1 G30
24B-G1F7 G30
24BAA1F2 D23
24BDR B7
24BF7 B4
24BF9 B4
24BF14 B4
24BF20-2 B4
24BF23 B4
24BF27 B4
24BF28-PA6 F6
24BH A11

24BHF2 A11
24BHF5 A11
24BK1F1 D11
24BK1F2 D11
24BNP B6
24BSF1 F4
24BSF2-2 F6
24BSK1F1 D14
24BSK1F2 D14
24BSK1F4 D14
24BSLR B9, B15
24BSLR-2 B9
24BSS O6, O8, O9, O18
24BSS3 O7
24BSS-1 O1
24BSS-2 O2
24BSS-3 O3
24BU1 G35
24BU1F4 G35
24BU1F5 G36
24BWK2F2 D20
24BWSK2F1 D22
24BWSK2F3 D22
24BZP B5
25 A1, C10, D1, D2, D3, D4
25-2 A2
25-3 A3
25DR B7
25H C10
25H(E C10
25HF2 C10
25HF5-6STC G10
25K1F1 D5
25NP B6
25SH A17
25SHF1 C10
25ZP B5
26BF29 G11
28A(FQ)-2 B13
28A-DD1F1 D49
28AF1-2 B2
28AF16WK2 D20
28AFTZ-2 B14
28AK1F6 D11
28AK2F6 D20
28ASLR B15
28ASS O6, O8, O9, O18
28ASS-1 O1
28ASS-2 O2
28ASS-3 O3
28AWA2F5 D20
28AWK2F1 D20
28AWK2F4 D20
28AWSK2F2 D22
28B D1, D2, D3, D42
28B-1 A5, A6
28B-3 A7
28B-DD3F3 D45
28B-DD3F3-2 D52
28BDR B7
28BF2 B4
28BF4 B4
28BF5 D11
28BF6 D11
28BF7 B4
28BK1F2 D11
28BK1F3 D11
28BK1F4 D11
28BKK1F2 D23
28BNP B6
28BSS O6, O8, O18
28BSS-1 O1
28BSS-2 O2
28BSS-3 O3
28BZP B5
28SK1F1 D14
32A-2-D3F2 D47
32A-D1F3 D44
32A-DD1F1 D45
32AF2 B2
32AF5 D22
32AF9 B2
32AF33 B2
32AF42 B2
32AF45 D37
32AF47SA3 D35
32AHF A11
32AK1F1 D11
32ASS O6, O8, O9, O18
32ASS-1 O1
32ASS-2 O2
32ASS-3 O3
32ASW D14
32AT B2
32AWK2F3 D20
32AWK2F46 D20
32AWK2F50 D20
32AWSK2F1 D22
32B D1, D2, D3, D42
32B-1 A5
32B-1-1872 G19
32B-2 A6
32B-2STCF1 G10
32B-3 A7
32B-1872 G19
32B-1874 G19
32B-1875 G13
32B-1876 G13
32B-1877 G13
32B-1878 G13
32B-1900F1 G19
32BDR B7
32BF4 G13
32BF15 G19
32BF20-1875 G13
32BF23 B4
32BF26 B4
32BF30 B4
32BF31-B B4
32BF35 B4
32BF38 D20
32BH A11
32BHF1 A11
32BHP I27
32BK1F1 D11
32BK2F3 D20
32BNP B6
32BSK1F1 D14
32BSS O6, O8, O18
32BSS-1 O1
32BSS-2 O2
32BSS-3 O3
32BWA2F3 D20
32BWK2F2 D20
32BWK2F4 D20
32BWK2F5 D20
32BZP B5
35 A1, D1, D2, D3, D4, D42
35-2 A2
35-3 A3
35DR B7
35F3B35 H3
35H-1 A8
35HF A11
35HF2 N1
35NP B6
35SH A17, A18
35SK1F1 D12
35ZP B5
36AF2 B2
36AK1F1 D11
38.4R N23
38.4RF2 N53
38.4RF5K1 N36
38.4RF7K1 N36
38.4RK1 N36
38.4RK1F1 N34
38.4RK1F2 N34
38.4RK1F3 N34
38.4RK1F4 N34
38.4RK1F6 N36
38.4RK1F7 N34
38.4RK1F8 N34
38.4RK1F9 N34
38.4RK1F10 N34
38.4RK1F11 N36
38.4RSD N42
38.4RSD-G N45
38.4RSDF1 N42
38.4RSDF2 N42
38.4RSDF3 N42
38.4RSDF4 N42
38.4RSDF5 N42
38.4RSDF6 N42
38.4RSDF7 N42
38.4RSDF8 N42
38.4RSDF10 N42
38.4RSDF10-G N45
38.4SHK1 N34
38.4V N23, N34, N36, N38, N39, N42, N48
38.4VB N23
38.4VBF2 N53
38.4VBF2-C6EF1 N46
38.4VBF3 N36
38.4VBF4 N52
38.4VBF5 N37
38.4VBF6 N37
38.4VBF7 N37
38.4VBF12 N48
38.4VBK N36
38.4VBK1F1 N38
38.4VBK1F3 N36
38.4VBSD N42
38.4VBSDF1 N42
38.4VBSDF2 N42
38.4VBSDF2-G N45
38.4VBSDF3 N42
38.4VBSDF5 N42
38.4VF3K1 N34
38.4VK1 N34
38.4VK1F1 N36
38.4VK1F8 N37
38.4VK1F10 N36
38.4VK1F11 N36
38.4VK1F12 N38
38.4VSD N42
38.4VSD-GF N45
38.4VSD-GF1 N45
40 A1, D1, D2, D3, D4, D23, D24, D42
40-1-1LTR F8
40-2 A2
40-3 A3
40-5 A4
40-6 A4
40-8 A4
40-PSR F4
40ASA1F1 D37
40ASA1F2 D14
40AWK2F1 D20
40AWSK2F1 D22
40B-1 A5
40B-2 A6
40B-3 A7
40B-DD1F1 D45
40BF4-2 B4
40BF7 D20
40BF8WK2 D20
40BK1F1 D11
40BSK1F1 D14
40DR B7
40H-1 A8
40HP I20
40HPF1D3 I27
40HPSS O14
40HSLR B8
40HSLR-2 B8
40HSLRF1 B8
40NP B6
40P G42
40S-C F4
40SB B20
40SBA1F3 B23
40SBA1F4 B23
40SBA1F5 B24
40SBF1 B22
40SBF4 B22
40SBF6 B23
40SBK1 B23
40SBSS O25
40SH A17, A18
40WK2F2 D16
40ZP B5
41 A1, D1, D2, D3, D4
41-1STCF1 G9
41-2 A2
41DR B7
41F5 D29
41F6 G5
41F12 D24
41HF A11
41HP I27
41NP B6
41SK1F3 D13
41SS-1 O1
41SS-2 O2
41WA1F4 D16
41ZP B5
43SB B20
43SBA1F1 B23
43SBF11 B21
43SBF12 B21
43SBF13 B21
43SBF14 B22
43SBSA1 B24
45-1 M30
48A-DD3F1-2 D52
48B-1 A5
48B-2 A6
48B-3 A7
48BF7 B4
50 A1, D1, D2, D3, D4, D23, D24, D42
50-1-1LTR F8
50-1C A12
50-1LTRF1 F8
50-1LTRF2 F8
50-1LTRF4 F8
50-2 A2
50-2C A12
50-3 A3
50-3C A12
50-5 A4
50-6 A4
50-8 A4
50-SR-C F4
50F21 G9
50H0-R B10
50H-1 A8
50H-1C A13
50H-HP I20
50HP I20
50HPF1 I27
50HPF4 I20
50HPSS O14
50HSLR-2 B8
50LD C14
50NP B6
50P G42
50SB B20
50SBA1 B23
50SBF1 B23
50SBF2 B22
50SBF4 B23
50SBF9 B23

50SF1-C F5
50SH A17
50SLR B8
50SLR-2 B8
50SSSB O25
50ZP B5
55-1 M30
55V N21
55VD N23
55VDF1-CPEF N50
55VDK1 N24, N38
55VF1 N21
55VF1H2 N61
55VF1SDF1 N30
55VF6-CPEF N50
55VK1 N24
55VK1F1 N27
55VK1F2 N27
55VK1F3 N27
55VSDF1 N28
55VSDF2 N28
55VSDF3 N28
55VSDF4 N28
55VSE N30
55VSE-G N45
55VSEF1 N30
55VSEL N30
55VSEL-GF1 N45
56B-1 A5
56B-2 A6
56B-3 A7
56BF6 B4
60 A1, D1, D2, D3, D4, D23, D24, D42
60-1-1LTR F8
60-1C A12
60-2 A2
60-2C A12
60-3 A3
60-3C A12
60-4 A4
60-5 A4
60-6 A4
60-8 A4
60-910 G3
60-911 G7
60-912 G7
60DR B7
60H0-R B10
60H-1 A8
60H-1C A13
60H-2 A9, N1
60H-2C A13
60H-3 A10
60H-3C A13
60HB I22
60HP I20
60HPF1 I20
60HPF2 I27
60HPF3 I27
60HPF3SS O16
60HPF6SS O14
60HPSS O14
60HSLR B8
60HSLR-2 B8
60HSP-2 N1
60HT0-R B10
60HV A11
60NP B6
60P G42
60S F4
60S2-C F5
60S-C F4
60SB B20
60SBF3 B23
60SBK1 B23
60SH A17, A18
60SHF1 A17, A18
60SLR B8
60SLR-2 B8
60ZP B5
63 I7
63HP I27
63HPF1 I24
63HPF2 I27
63HPF4 I27
63HPF6 I27
63HPF11 I27
63HPF12 I27
63PF2 I5
63PF4 I5
63PF5 I5
63PF11 I5
63PS F3
63PSF1 F3
63SB B20
63SBF2 B22
63SBF7SA B24
64B-1 A5
64B-2 A6
64B-3 A7
65-1 M30
72B-1 A5
72B-2 A6
72B-3 A7
76HP I17
80 A1, B11, D1, D2, D3, D4, D23, D24, D42
80-1-1LTR F8
80-1C A12
80-1LTRF1 F8
80-2 A2, B11
80-2C A12
80-3 A3, B11
80-3C A12
80-4 A4, B12
80-5 A4, B12
80-6 A4, B12
80-8 A4, B12
80-STCF1 G15
80DR B7
80F5K1B100 H11
80H-1 A8
80H-1C A13
80H-2 A9
80H-2C A13
80H-3 A10
80H-3C A13
80H-HP I20
80HAA1F1 D23
80HP I20
80HPF1 I20
80HPF2 I20
80HPF3 I20
80HPF4 I20
80HPF5 I20
80HPSS O14
80HSLR B8
80HSP-1 A15
80HSP-2 A15
80HSP-3 A15
80HSPE-2 A16
80K2F1B100 H11
80NP B6
80S F4
80S-C F4
80SB B20
80SH A17, A18
80SHF1-DD1 D45
80SLR B8
80SLR-2 B8
80SP-1 A14
80SP-2 A14
80SP-3 A14
80SPE-2 A16
80ZP B5
81X G1
81X-SS G1
81XH G1
81XH-SS G1
81XHH G1
81xRT G1
85-1 M30
88C N66, N69, N70
88C-ASF2 N69
88C-ASF3 N69
88C-KSF5 N69
088F73 G4
88K N69, N70
88KF10 N67
88KK1C N71
88KK1M N71
88KK1P N71
88KK2C N71
88KK2M N71
88KK2P N71
90R-S L2, L3
100 A1, B11, D1, D2, D3, D4, D23, D24, D42
100-1-1LTR F8
100-1C A12
100-2 A2, B11
100-2C A12
100-3 A3, B11
100-3C A12
100-4 A4, B12
100-5 A4, B12
100-6 A4, B12
100-8 A4, B12
100DR B7
100H-1 A8
100H-1C A13
100H-2 A9
100H-2C A13
100H-3 A10
100H-3C A13
100HAA1F1 E10
100HSP-1 A15
100HSP-2 A15
100HSP-3 A15
100HSPE-2 A16
100NP B6
100S F1
100S2 F5
100S2F1 F5
100SLR B8
100SLR-2 B8
100SP-1 A14
100SP-2 A14
100SP-3 A14
100SPE-2 A16
100ZP B5
105-1 M30
112F27B160 H5
112K2F2B100 H11
120 A1, B11, D1, D2, D3, D4, D23, D24, D42
120-1C A12
120-2 A2, B11
120-2C A12
120-3 A3, B11
120-3C A12
120-4 A4, B12
120-5 A4, B12
120-6 A4, B12
120-8 A4, B12
120-1802 G12
120DR B7
120F6 G10
120H-1 A8
120H-1C A13
120H-2 A9
120H-2C A13
120H-3 A10
120H-3C A13
120HSP-1 A15
120HSP-2 A15
120HSP-3 A15
120HSPE-2 A16
120NP B6
120SH A17, A18
120SP-1 A14
120SP-2 A14
120SP-3 A14
120SPE-2 A16
120ZP B5
125-1 M30
140 A1, B11, D1, D2, D3, D4, D42
140-1C A12
140-2 A2, B11
140-2C A12
140-3 A3, B11
140-3C A12
140-4 B12
140-5 B12
140-6 B12
140-8 B12
140DR B7
140H-1 A8
140H-1C A13
140H-2 A9
140H-2C A13
140H-3 A10
140H-3C A13
140HSP-1 A15
140HSP-2 A15
140HSP-3 A15
140HSPE-2 A16
140HWSK0F1 D22
140NP B6
140SH A17, A18
140SP-1 A14
140SP-2 A14
140SP-3 A14
140SPE-2 A16
140ZP B5
145-1 M30
160 A1, B11, D1, D2, D3, D4, D42
160-1C A12
160-2 A2, B11
160-2C A12
160-3 A3, B11
160-4 B12
160-5 B12
160-6 B12
160DR B7
160F1K2.03B100 H11
160F2B100 H11
160F14B100 H5
160F15B100 H5
160F36B160 H5
160F41K2B100 H11
160F55K2B100 H11
160H0-R B10
160H-1 A8
160H-1C A13
160H-2 A9
160H-2C A13
160H-3 A10
160H-3C A13
160HSP-1 A15
160HSP-2 A15
160HSP-3 A15
160HSPE-2 A16
160NP B6
160SH A17, A18
160SP-1 A14
160SP-2 A14
160SP-3 A14
160SPE-2 A16
160ZP B5
165-1 M30
170GSX B1
180 A1, B11
180-1C A12
180-2 A2, B11

180-2C A12
180-3 A3, B11
180-3C A12
180H-1 A8
180H-1C A13
180H-2 A9
180H-2C A13
180H-3 A10
180H-3C A13
180SH A17, A18
200 A1, B11, D1, D2, D3, D4
200-1C A12
200-2 A2, B11
200-2C A12
200-3 A3, B11
200-4 B12
200-6 B12
200H0-R B10
200H-1 A8
200H-1C A13
200H-2 A9
200H-2C A13
200H-3 A10, B11
200H-3C A13
200HSP-1 A15
200HSP-2 A15
200HSP-3 A15
200HSPE-2 A16
200SH A17
200SP-1 A14
200SP-2 A14
200SP-3 A14
200SPE-2 A16
205 B1
208AA2040 C19
208AF2 N2
208AF3 N2
208AF3A N2
208AF17 E2
208AF18 E2
208AHA2040H C19
208ASS O10
208B C19, E4
208B-D3F17 E31
208BA1F4 E4
208BF41 E21
208BF42 E21
208BF43 E21
208BF45 E2
208BF49 E20
208BS-35-C24 F3
208BSF1-35-P24 F3
208BSK1F2 E11
208BSK1F3 E11
208BSK1F4 E11
208BSS O10
210AA2050 C19
210AHA2050H C19
210ASS O10
210B C19, E4
210B-D1F3 E31
210BF3 E21
210BSS O10
212AA2060 C19
212AHA2060H C19
212ASS O10
212B C19, E4
212BA0F1 E4
212BHF1 E2
212BK2F2 E4
212BS-43-P48 F1
212BS-48-C28 F3
212BSF2 F3
212BSF3 F3
212BSF4 F3
212BSF4-48-C24 F3
212BSF5-43-C28 F3
212BSS O10
212BW E14
216AA2080 C19
216AHA2080H C19
216ASS O10
216B C19, E4
216B-D1F4 E31
216BF1 N61
216BF4 E3
216BS-65-C38.5 F3
216BS-65-C40 F3
216BS-65-P50 F3
216BSA2F1 E4
216BSS O10
216BW E14
219H C10
219HF1 C10
219HF2 C10
219HT C10
220AA2100 C19
220AHA2100H C19
220AHF1-1C E20
220ASS O10
220B C19, E4
220BF1 E3
220BF3 E3
220BSS O10
224AA2120 C19
224AHA2120H C19
224ASS O10
224B C19, E4
224BSS O10
224F40B160 H5
224F52B160 H5
228B C19
232B C19
240 A1
240-1C A12
240-2 A2
240-2C A12
240-3 A3
240H-1 A8
240H-1C A13
240H-2 A9
240H-2C A13
240H-3 A10
240H-3C A13
240SH A17
255H A18
270H C10
308 N66
350-R B10
400-R B10
405 F4
415B B3
415BF1 B3
415BF3 B3
415BF5 B3
415BF7 B3
415F1 N11
415F2 N11
415F3 N11
415F4 N11
415F5 N11
415F19 B1
415H B1
415S-A N11
415SF1 N11
415SF4 N11
415SF6 N11
415SF7 N11
415SF10 N11
415SF16 N11
420 C12
420F3 C12
420H0R C14
420HF1 C12
420HT C12
420JF1 N11
420T N1
423 B1
423F2 B1
428 C12
428DS C12
428F1 C12
428F3 C12
428F4 C12
428H C12
428HD C12
428HF1 C12
428HF4 C12
428HJF1 G5
428HJF2 G5
428HK1F3 D6
428HSH C12
428HVS C14
428HWK1 D16
435BSS O25
478 B1
500-R B10
500RA1F D8
505F1-P F5
505H A18
515 B1
520 C13, N1
520F2 C13
520F3 C13
520F9XR C15
520F10R C14
520F12 C13
520F20R C14
520F140R C14
520H C14
520HD C13
520HF2 N1
520HF3 N1
520HF4 N1
520HF6 N1
520HF7 C13
520HXR C15
520MH C13
520V6 C14
520XR C15
525 C13
525F10R C14
525H C14
525HF1 C13
525HXR C15
525MH C13
525XR C15
530 C13
530H C14
530HXR C15
532 N21
532V N21
542 N21
545 N21
551 N21
552 N21
555 N21
562 N21
562F1 N33
577 N21
588 N21
600-R B10
600-RF1 B10
630 C13
630F1 B1
630F10R C14
662 N66, N69, N70
662-ASF2 N69
662-ASF3 N69
662F1 N68
662F4 N67
662F7 N66
662G28 N70
662G30 N70
662G30S N70
662HF2 N66
662HF3 N67
662K1 N71
662K19 N71
667-ASF1 N69
667H N66, N69, N70
667H-ASF2 N69
667H-ASF5 N69
667H-ASF9 N69
667H-ASF10 N69
667HK1 N71
667J N66
667K N66, N69, N70
667K-ASF6 N69
667K-ASF8 N69
667K-ASF9 N68
667KF2SS N67
667KF3SS N67
667X N66, N69, N70
667X-ASF3 N68
667X-ASF7 N69
667X-ASF8 N69
667X-ASF10 N68
667X-ASF11 N68
667X-ASF14 N69
667XH N66
667XH-AS N69
667XH-ASF3 N69
667XH-ASF4 N69
667XH-ASF7 N69
667XH-KSF5 N69
667XK1 N71
800-R B10
856 I36
856K3 I36
856K24 I36
856K35 I36
857 I36
859 I36
859K44 I36
864 I36
864K443 I36
955 A17, A18
1000-R B10
1005H A17, A18
1200-R B10
1222 M13
1234 M13
1244 M13
1244F3 M14
1256 M13
1266 M13
1266F1 M14
1288 M13
1409F1 C1
1523 M13
1534 M13
1543 M13
1544 M13
1545 M13
1556 M13
1566 M13
1567 M13
1578 M13
1588 M13
1650HPF3SS O15
1922V-D2 M12
1944 M13
1966 M13
1978 M13
1988 M13
2005H A18
2010 C1
2010H C1
2010SH C1
2040 E4
2040-D3F12 E31
2050 E4
2060 E4
2060AA2F1 E10
2060F75 E2

2060HK1F26 E4
2060HK1F27 E16
2060HK1F28 E16
2080 E4
2082HF83 E3
2100 E4
2120 E4
2184 C4
2405H A18
2510 C1
2510F1 C1
2510F2 C1
2510F3 C2
2510F5 C2
2510H C1
2512(1X33011 C1
2512F2 C1
2512F3 C1
2512F4 C1
2522 M14
2523 M14
2534 M14
2544 M14
2545 M14
2556 M14
2567 M14
2578 M14
2588 M14
2814 C2
2814F1 C2
2814F2 C2
2814F3 C2
2814F4 C2
3125 C2
3125F2 C2
3125HF1 C2
3134 M14
3144 M14
3166 M14
3188 M14
3214 C2
3214F1 C2
3214F2 C2
3214F3 C3
3214F5 C3
3214F6 C3
3217F1 C3
3315 C3
3315F1 C3
3315F2 C3
3315F3 C3
3320-66401 N20
3322-821 N15
3322-1473 N20
3322-1501 N15
3322-1507 N20
3322-63201 N14
3322-66401 N20
3322T-27151 N16
3322T-28241 N16
3322T-52800 N16
3322T-52800F1 N16
3322T-52800F2 N16
3322T-63203 N18
3325-1E6110 N18
3325-1E8350 N18
3325-4LB1.35 N15
3325-4LB1.45 N15
3325-763 N15
3325-1012 N15
3325-3555 N15
3325-3572 N15
3325-9059 N14
3325-9059F1 N14
3325-23160 N14
3325-23550 N14
3325-49200 N14
3325-66202 N15
3325T-1E8350 N20
3325T-699 N16
3325T-3650 N16
3325T-3817 N16
3325T-5060 N16
3325T-23151 N16
3325T-27151 N16
3325T-49201 N16
3325T-49201F1 N16
3325T-A0680110 N16
3325T-A0680110F1 N16
3330-4LB1.45 N15
3330-4LB1.45-01 N15
3330-1507 N20
3330-1509 N20
3330-3852 N14
3330-27150 N14
3330-28361 N14
3330-66401 N20
3330-66402 N20
3330-66402F1 N14
3330-66402F2 N14
3330-74311 N14
3330-74311F1 N14
3330T-711 N17
3330T-3501 N17
3330T-3817 N17
3330T-5028 N17
3330T-5441 N17
3330T-27151 N16
3330T-27151F1 N16
3330T-28241 N17
3330T-28241F1 N17
3330T-28241F2 N17
3330T-28242 N17
3330T-52200 N17
3330T-53350 N17
3330T-53981 N17
3330T-59750 N17
3330T-66103 N18
3335T-27151 N17
3340-1E8570 N15
3340-1067 N15
3340-3555 N15
3340-3572 N15
3350-3555 N15
3350T-744 N17
3350T-6379 N17
3358-1E N15
3358-1E7070 N15
3358-6365 N15
3358-48000 N19
3358-48180 N19
3358-48180F2 N19
3358-74211 N19
3358T-762 N19
3358T-3330 N17
3358T-3653 N19
3358T-6365 N17
3358T-6365F1 N17
3358T-6365F2 N17
3358T-53871 N17
3500 I19
3540-0875 N15
3540-3572 N15
3550-5080 N15
3558-4LB1.35 N15
3558-48180 N19
3558T-48001 N12
3558T-48001F1 N12
3558T-48001F2 N12
3558T-48002 N12
3618 C3
3618F1 C3
3939-B4 G2
3939-B21 G2
3939-B23 G2
3939-B24 G2
3939-B40 G2
3939-B43 G2
3939-B44 G2
3939H-B4 G2
4012 C17
4014 C17
4016 C17
4020 C3
4020F1 C3
4020F2 C3
4020F3 C3
4020F5 C4
4020F6 C4
4020HF1 C3
4020HF2 C4
4020HF4 C4
4020SHF1 C4
4020SHF2 C4
4052-5R F5
4155 N11
4200R C14
4424F1 C4
4824 C4
4824F1 C4
5014 C17
5016 C17
5018 C17
5200R C14
5250R C14
5255HXR C15
5305H C13
5305HXR C15
5628 C4
5628F1 C4
5628F4 C4
5984F3K443 I36
6018 C17
6020 C17
6022 C17
6060 C4
6060F3 C4
8018 C17
8020 C17
8022 C17
10018 C17
10022 C17
12018 C17
12022 C17
12160-3C A12
112466DG M16
112844DGF1 M16
112866CGF1 M16
112866DG M16
113244F2DG M16
113244F6DG M16
113266DGF1 M16
113266F3DG M16
113266F6DG M16
113288DGF2 M16
113288F6DG M16
114066DG M16
114088DG M16
114088F2DG M16
581254 C2

A

A0F2 D12
A1(A2 C9
A1F1 D5, D15, E14
A1F2 D5, D15, D17, E14
A1F4 D33, E14
A1F5 D17, E14
A1F6 D15, D17
A1F8 D17
A1F9 D17
A1F13 D17
A1F16 D15
A1F17 D15
A1F18 D15
A1F19 D15
A1F21 E8
A2-F H50
A2F1 D14, D17, E14
A2F2 D15, D17
A2F3 D17
A2F4 D15, E14
A2F5 D17
A2F6 D15, D17, D22
A2F7 D19, E14
A2F10 D17
A2F11 D17
A2F13 D17
A2F17 D17
A2F18 D17
A2F19 D17
A2F20 D17
A2F21 D17
A2F22 D17
A2F25 D15
A2F30 D15
A2F31 D15
A2F33 D15
A2F34 D15, D19
A2F36 D19
A2F37 D19
A3F3 D39
A3F4 D39
A06B F7
A06B-2 B3
A06B-D12 D46
A550 N22
A555 N22
A557 N22
A557F1K39M N40
A557F1K39MF3 N39
A557F4K39M N40
A557F7K39M N40
A557F16K39M N40
A557K35M N40
A557K39M N40
A557K39MF N40
A557K39MF13 N40
A620 N22
A2050AA1F1 E10
A2050P G42
A2080HP I20
AL322 M5
AL322F1 M8
AL322HF2 M8
AL344 M5
AL344F1 M8
AL344F3 M8
AL344F4 M8
AL366F1 M8
AL388F1 M8
AL422 M5
AL422F1-D M12
AL444 M5
AL466 M5
AL522 M5
AL0522 M8
AL522-D M12
AL522-D2F1 M12
AL522F1-D2 M12
AL534 M5
AL544 M5
AL0544 M8
AL566 M5
AL0566 M8
AL622 M5
AL622-DD3F1 M12
AL644 M5
AL644F4-D2 M12
AL666 M5
AL688 M5
AL822 M5
AL822F3 M8
AL844 M5
AL866 M5
AL866F1 M8

AL888 M5
AL1022 M5
AL1044 M5
AL1044F1 M8
AL1066 M5
AL1066F2 M8
AL1088 M5
AL1222 M5
AL1244 M5
AL1266 M5
AL1266F1 M8
AL1288 M5
AL1444 M5
AL1466 M5
AL1644 M5
AL1666 M5
AL1688 M5
AL10910F1 M8

B

b1mind2 H24
B41.4F1 I22
B12088F2DG M16
BC41.3 K19
BC127F1 K19
BC127F3 K19
BC127F4 K19
BC150 K19
BC150F1 J13
BC171.45F1114.32 K21
BC200F1 K19
BC200F2 K19
BC200F3 K19
BC200F5 J13
BC200F6 K19
BC250F1 K19
BC250F2 K19
BC270F1-2 K21
BC300/400F1 K18
BC300F1 K19
BC300F2 K20
BC350F1 K18
BC500F2 K20
BF14 N48
BF15K1 N38
BK39M N39
BL422 M18
BL422-DD3 M12
BL423 M18
BL432F1 M8
BL434 M1, M18
BL444 M1, M18
BL446 M18
BL466 M18
BL522 M18
BL523 M18
BL534 M18
BL544 M18
BL544F1 M8
BL544F8 M8
BL546 M1, M18
BL566 M18
BL622 M18
BL623 M18
BL634 M18
BL644 M1, M18
BL646 M18
BL666 M18
BL666F1 M9
BL666GL M9
BL822 M18
BL822F1-D M12
BL822HF1-D M12
BL822HF2-DD3 M12
BL823 M18
BL834 M18
BL834F2 M9
BL834F3 M9
BL834F5 M9
BL844 M1, M18
BL844F8 M9
BL846 M18
BL866 M18
BL866F1 M9
BL866F3 M9
BL866F5 M9
BL1022 M2, M19
BL1022F1-D M12
BL1022H-D2 M12
BL1023 M2, M19
BL1034 M2, M19
BL1044 M2, M19
BL1046 M2, M19
BL1046F2 M9
BL1066 M2, M19
BL1088 M2
BL1222 M2, M19
BL1223 M2, M19
BL1234 M2, M19
BL1244 M2, M19
BL1246 M2, M19
BL1266 M2, M19
BL1266F1 M11
BL1288 M2
BL1422 M2, M19
BL1423 M2, M19
BL1434 M2, M19
BL1444 M2, M19
BL1446 M2, M19
BL1466 M2, M19
BL1488 M2
BL1622 M2, M19
BL1623 M2, M19
BL1634 M2, M19
BL1644 M2, M19
BL1646 M2, M19
BL1666 M2, M19
BL1666F4 M11
BL1688 M2
BL2022 M2, M19
BL2023 M2, M19
BL2034 M2, M19
BL2044 M2, M19
BL2046 M2, M19
BL2066 M2, M19
BL2088 M2
BL4222x M1
BL4232x M1
BL4464x M1
BL4666x M1
BL4888x M1
BL5222x M1
BL5232x M1
BL5343x M1
BL5666x M1
BL5888x M1
BL6222x M1
BL6232x M1
BL6343x M1
BL6464x M1
BL6666x M1
BL6888x M1
BL8222x M1
BL8232x M1
BL8343x M1
BL8464x M1
BL8666x M1
BL8888x M1
BS30-C206B E36
BS30-C208A E36
BS30-C210A E36
BS30-C212A E36
BS30-C216A E36
BSA0F1 D13
BSDF4 N42

C

C4-120 C8
C4-123 C8
C4-129 C8
C4-132 C8
C4-138 C8
C4-150 C8
C4-320 C8
C4-323 C8
C4-329 C8
C4-332 C8
C4-338 C8
C08A-1 C20
C08A-2 C20
C08A-3 C20
C08ASS-1 O4
C08ASS-2 O4
C08ASS-3 O4
C08B-G1 G29
C08B-G2 G29
C08BF77 B3
C08BHF8 A11
C08BHP I21
C08BHPSS O14
C08BSA1F21 D12
C08BSLR B9
C08BSLR-2 B9
C08BSS-1 O5
C08BSS-2 O5
C08BSS-3 O5
C10A-1C50-1 C20
C10A-2 C20
C10A-3 C20
C10ASS-1 O4
C10ASS-2 O4
C10ASS-3 O4
C10B-5STC G6
C10B-G1 G29
C10B-G1F1 G29
C10B-G2 G29
C10BF56-2 B3
C10BF87-2 B3
C10BHBSS O17
C10BK0F1 D6
C10BSLR B9
C10BSLR-2 B9
C10BSS-1 O5
C10BSS-2 O5
C10BSS-3 O5
C10BWSK D21
C12A-1 C20
C12A-2 C20
C12A-3 C20
C12AHB I24
C12ASK1F6 D13
C12ASS-1 O4
C12ASS-2 O4
C12ASS-3 O4
C12AWSA1F D21
C12B G11
C12B-1-9010 G6
C12B-1STCF3 G17
C12B-940 G6
C12B-9010 G6
C12B-D1F111 D46
C12B-G1 G29
C12B-G2 G29
C12BA1F D8
C12BF74 D38
C12BHF3 A11
C12BHP I24
C12BHPF9 I27
C12BNP-D3F68 D46
C12BNP-D3F76 D46
C12BSLR B9
C12BSLR-2 B9
C12BSS-1 O5
C12BSS-2 O5
C12BSS-3 O5
C12BWK2F12 D16
C12BWSK D21
C16A1-3PEPF1 G3
C16A-1 C20
C16A-1-1160F G6
C16A-2 C20
C16A-2-4STCF1 G15
C16A-2-5PEPF1 G11
C16A-3 C20
C16A-3PEP G3
C16A-5PEP G11
C16A-5PEPF1 G11
C16A-1160 G6
C16A-1170 G3
C16A-D1F49 D46
C16A-G1 G29
C16A-G2 G29
C16AF2 G11
C16AF112 B2
C16ASA2F1 D13
C16ASS-1 O4
C16ASS-2 O4
C16ASS-3 O4
C16B-1STCF4 G18
C16B-1160 G6
C16B-1161 G6
C16B-G1 G30
C16B-G2 G30
C16BF1SLR B9
C16BF2 G11
C16BF3 G3
C16BF84-2 B3
C16BK1F40 D9
C16BSK0F D22
C16BSK0F1 D13
C16BSK0F3 D14
C16BSK0F4 D14
C16BSLR B9
C16BSLR-2 B9
C16BSLR-3 B9
C16BSLRF1 B9
C16BSLRF2 B9
C16BSS-1 O5
C16BSS-2 O5
C16BSS-3 O5
C16BWK2F D18
C16BWSK D22
C20A-1 C20
C20A-1-4STC G12
C20A-1-4STCF1 G15
C20A-2 C20
C20A-2-1STC G15
C20A-3 C20
C20A-G1 G29
C20AH-D1F1 D50
C20AHF A11
C20ASLR-2 B8
C20ASS-1 O4
C20ASS-1ST O30
C20ASS-2 O4
C20ASS-3 O4
C20B-G1 G29
C20B-G2 G29
C20BF9 G11
C20BF41 D41
C20BF51 D40
C20BSS-1 O5
C20BSS-2 O5
C20BSS-3 O5
C20BWK0F1 D19
C24A-1 C20
C24A-1-3STC G3
C24A-2 C20
C24A-3 C20
C24ASS-1 O4
C24ASS-2 O4
C24ASS-3 O4
C24B-2STC G6

C24B-4STC G3
C24B-6STCF1 G11
C24B-1820 G12
C24B-1831 G11
C24B-G1 G29
C24BF6 B4
C24BF18 B4
C24BF19 B4
C24BF22 B4
C24BK0F1 D11
C24BSA0F14S G18
C24BSB B20
C24BSS-1 O5
C24BSS-2 O5
C24BSS-3 O5
C28A-1 C20
C28A-2 C20
C28A-3 C20
C28ASS-1 O4
C28ASS-2 O4
C28ASS-3 O4
C28BSS-1 O5
C28BSS-2 O5
C28BSS-3 O5
C32A-1 C20
C32A-2 C20
C32A-3 C20
C32AF36 B2
C32AF41K2 D20
C32ASS-1 O4
C32ASS-2 O4
C32ASS-3 O4
C32B-1874F1 G19
C32BF24 B4
C32BSS-1 O5
C32BSS-2 O5
C32BSS-3 O5
C35-1 C20
C40-1 C20
C40-2 C20
C40-3 C20
C40A1F1 D5
C40HF A11
C40HP I21
C45F1SD N29
C50-2 C20
C50-3 C20
C50-G2 G29
C50-G2F1 G29
C50HP I21
C50SA2F1 D33
C50SA2F2 D33
C50SLR B8
C55VK1 N34
C55VK1F1 N34
C60-1 C20
C60-2 C20
C60-2STCF G6
C60-3 C20
C60F2 G3
C60HBF4SS O17
C60HP I21
C60SHF2 A17, A18
C60SLR B8
C60TS D28
C70SH A17, A18
C70SHFl A17, A18
C80-1 C20
C80-2 C20
C80-3 C20
C80HP I21
C80SLR B8
C100-1 C20
C100-1-3STC G3
C100-2 C20
C100-2-5STC G11
C100-3 C20
C120-1 C20
C120-2 C20
C120-3 C20
C140-1 C20
C140-2 C20
C140-3 C20
C160-1 C20
C160-2 C20
C160-3 C20
C208AF1 E6
C208B E1, E5
C208B-D3F19 E31
C208BA1F8 E6
C208BA2F2 E6
C208BA2F3 E6
C208BF3 E2
C208BF46 E21
C208BGKF1 E29
C208BGKF3 E29
C208BGKF4 E29
C208BGKF6 E29
C208BGKF7SLR E29
C208BHK1F7 E6
C208BK1F11 E6
C208BK2F E14
C208BL E1, E5
C208BSA2F2 E12
C208BSK2F2 E12
C208BW E14
C208HF4 E26
C210AF1 N3
C210AF4 E33
C210AH-1STCF1 G5
C210B E1
C210BF2GK E29
C210BL E1
C210BSA2F2 E20
C210BSA2F3 E12
C210BSA2F4 E20
C210BSS O11
C212AF1 N3
C212AHF3 E32
C212AHF7 E32
C212AHF8 E32
C212AHL-D4 E32, E33
C212B E1
C212BF2 E2
C212BF9 E2
C212BL E1
C212BS F7
C212BSS O11
C216AH2F E11
C216ALF5 E14
C216B E1
C216BA2F E9
C216BF1 E3
C216BL E1
C216BSS O11
C219H C10
C220AGK E29
C220AH-BF1 E3
C220AHA2F E9
C220AHK1F E9
C220AHSA2F1 E12
C220AHSLR-D1F3 E35
C220ALA1F E9
C220ALA2F E9, E17
C220ALW E14
C220B E1
C220BL E1
C220BSS O11
C224AF2 E23
C224AF13 E16
C224AHA2F E9
C224AHF2 E3
C224AHF8A2 E26
C224AHK2F E9
C224AHLF5 E3
C224AHLSA2F1 E11
C224AHLSA2F2 E12
C224AHSK1F2 E12
C224AHWK2 E14
C224ALK2F2 E25
C224ALSK2F1 E11
C224ALSK2F2 E12
C224B E1
C224BL E1
C232BF1 E3
C1655HP I24
C2030W E36
C2040 E1, E5, E30
C2040-1LTR F9
C2040-1LTRF2 F9
C2040-1LTRF3 F9
C2040-D1F23 E31
C2040-D3F13 E31
C2040-D3F15 E31
C2040A1F3 E6
C2040A1F4 E6
C2040A2F1 E6
C2040A2F18 E6
C2040F23SAA1 E13
C2040F23SK0 E12
C2040GKF6 E28
C2040GKF7 E28
C2040H E1
C2040H0R-W N60
C2040HP I21
C2040HPF1 I21
C2040HPSS O14
C2040HSS O11
C2040HW E14
C2040K1F2 E14
C2040K1F6 E6
C2040K1F8 E6
C2040W E36
C2042 E1, E5, E30
C2042-D1F20 E31
C2042A1F4 E6
C2042F E22
C2042F1 E6
C2042F8 E23
C2042H E1
C2042H-HPSS O17
C2042HF1 E14
C2042HHP I24
C2042HK1F1 E6
C2042HP I24
C2042HPSS O17
C2042HWSA2 E11
C2042K2F4 E6
C2050 E1, E5, E30
C2050-1LTR F9
C2050-1LTRF3 F9
C2050-D E33
C2050-D1F62 E35
C2050-D1F63 E35
C2050-D1F64 E35
C2050-D5F1 E33
C2050-D5F25 E34
C2050A1F6 E6
C2050A6 E26
C2050F9 E22
C2050F12 E2
C2050F44 E34
C2050F47 E18
C2050F71 E16
C2050F73GK E28
C2050GKF2 E28
C2050GKF3 E28
C2050GKF4 E28
C2050GKF5 E28
C2050GKF6 E28
C2050GKF7 E28
C2050GKF8 E28
C2050GKF10 E28
C2050GKF12 E32
C2050GKF13 E28, E32
C2050GKF14 E28
C2050GKF15 E28
C2050HF2 E22
C2050HGK E28
C2050HGKF1 E28
C2050HGKF4 E28
C2050HGKF5NP E28
C2050HGKF17 E28
C2050HP I21
C2050HPSS O14
C2050HW E11, E17
C2050S F4
C2050SA0F6 E12
C2050SBK0F1 B23
C2050SBK0F2 B23
C2050SBK1 B23
C2050SD E15
C2050SK1F2 E12
C2050W E36
C2052 E1, E5, E30
C2052-D1F15 E35
C2052-D1F23 E31
C2052-D1F27 E31
C2052-D1F28 E31
C2052-D1F29 E34
C2052-D1F52 E31
C2052-D1F54 E31
C2052-D1F71 E31
C2052-D1F72 E31
C2052-D3F20 E31
C2052-D3F24 E34
C2052-D3F55 E34
C2052-D4 E33
C2052-D5F26 E32
C2052-D5F27 E32
C2052-D13F2 E31
C2052-P E35
C2052A1F1 E15
C2052A2F1 E6
C2052A2F2 E6
C2052A2F3 E6
C2052DF1 E33
C2052F1 E32
C2052F2 E32
C2052F11 E26
C2052F14 E32
C2052F51 E2
C2052F56-D1SS E31
C2052H-HPSS O17
C2052HF6 E16
C2052HGKF3 E28
C2052HHP I24
C2052HP I24
C2052HPF1 I24
C2052HPF3 I24
C2052HPSS O17
C2052K1F10 E6
C2052W E14
C2060 E1, E5, E30
C2060-1LTR F9
C2060-1LTRF6 F9
C2060A1F38 E6
C2060A2F26 E6
C2060A2F27 E6
C2060A2F93 E6
C2060F28 E2
C2060F75 E2
C2060F77OR N60
C2060F110 E25
C2060F770R N60
C2060GKF1 E28
C2060GKF2 E28
C2060GKF3 E28
C2060GKF8 E28
C2060GKF18 E28
C2060H E1, E5, E30
C2060H-1LTRF7 F9
C2060H-50.8F1 E3
C2060H-D1F57 E31
C2060H-D3F44 E31
C2060H-D5F4 E32

C2060H-D23 E32
C2060H-D24 E32
C2060H-D31 E32
C2060H-HP I21
C2060H-U1F1 E24
C2060HA1F12 E6
C2060HA2F26 E7
C2060HF3A2 E7
C2060HF9 E29, E32
C2060HF10 E32
C2060HF69GK E29
C2060HF75 E32
C2060HF81 E16
C2060HGKF3 E28
C2060HGKF4 E29
C2060HGKF5 E29
C2060HGKF6 E29
C2060HGKF7 E29
C2060HGKF10 E29
C2060HGKF22 E29
C2060HGKF24 E29
C2060HK1F E7
C2060HK1F22 E7
C2060HK1F26 E7
C2060HK1F31 E17
C2060HK1F33 E7
C2060HK2F3 E7
C2060HK2F94 E7
C2060HP I21
C2060HPSS O14
C2060HS F4
C2060HS-C F5
C2060HSAA1F1 E13
C2060HSF6SK2 E12
C2060HSK1F1 E11
C2060HW E14
C2060K1F1 E7
C2060K1F3 E7
C2060K1F29 E16
C2060K1F32 E7
C2060K1F37 E17
C2060SA2F1 E11
C2060SBF1 B20
C2060SK0F4 E12
C2060SLR-D3F55 E31
C2060SLR-D3F56 E35
C2060WA2 E14
C2062 E1, E5, E30
C2062-5 F5
C2062-D1F32 E31
C2062-D1F40 E31
C2062-D1F43 E35
C2062-D1F54 E31
C2062-D3F31 E31
C2062-D6 E33
C2062-D8 E35
C2062-D38 E32
C2062-D39 E32
C2062A1F13 E7
C2062A1F36 E7
C2062A2F6 E7
C2062A2F22 E7
C2062A2F24 E7
C2062AA1F1 E10
C2062F E18
C2062F5 E23
C2062F6 E23
C2062F6SB B20
C2062F82 E19
C2062F95 E2
C2062F101 E2
C2062F102 E18
C2062GKF25 E29
C2062H E1, E5, E15, E30
C2062H0RSDF1 N60
C2062H-D1F45 E35
C2062H-D1F47 E31
C2062H-D1F50 E35
C2062H-D1F58 E31, E35
C2062H-D1F68 E31
C2062H-D41 E32
C2062H-HPSS O17
C2062HA1F4 E7, E15
C2062HA1F7 E7
C2062HA1F25 E7
C2062HA1F29 E17
C2062HA2F E17
C2062HA2F7 E7
C2062HA2F18 E7
C2062HF E18, E22
C2062HF13 E23
C2062HF15 E7
C2062HF63A2F1 E26
C2062HF63A2F4 E26
C2062HF77A2 E26
C2062HF84 E18
C2062HF99 E31
C2062HGKF17D5F1 E32
C2062HHP I24
C2062HHPF3 I24
C2062HK1F5 E7
C2062HK2F4 E7
C2062HK2F5 E7
C2062HNP-D1F59 E31
C2062HP I24
C2062HPSS O17
C2062HS-C F5
C2062HSA1F2 E12
C2062HSK2F1 E11
C2062HU1F1 E19
C2062HW E14
C2062HWA2 E14
C2062K2F7 E7
C2062W E14
C2080 E1, E5, E30
C2080-1LTR F9
C2080A1F78 E7
C2080A2F78 E8
C2080H E1, E5, E30
C2080H-1LTR F9
C2080HA2F12 E8
C2080HF E8
C2080HF1 E3
C2080HF6 E26
C2080HF11 E26
C2080HF51 E3
C2080HF78 E26
C2080HF87 E3
C2080HF91 E12
C2080HGF1 E24
C2080HGKF2 E29
C2080HGKF6 E29
C2080HGKF12 E29
C2080HK1F8 E8
C2080HK1F13 E8
C2080HK1F24 E8
C2080HP I21
C2080HPSS O14
C2080HW E14
C2080HWK2 E14
C2080K1F4 E10, E24
C2080W E36
C2082 E1, E5, E30
C2082-D1F8 E31
C2082-D1F21 E31
C2082A1F22 E8
C2082A1F79 E8
C2082A2F1 E8
C2082A2F2 E8
C2082A2F23 E8
C2082A2F26 E8
C2082A2F27 E8
C2082F1AA1-D3 E19
C2082F8 E23
C2082F12 E14
C2082F24 E14
C2082F58SA1 E11
C2082F64K2 E8
C2082F88K1 E8
C2082GKF14 E29
C2082GKF15 E29
C2082GKF16 E29
C2082GKF17 E29
C2082H E1, E5, E8, E30
C2082H-D1F10 E31
C2082H-D1F12 E31
C2082H-D1F22 E31
C2082H-D3F19 E35
C2082H-HPSS O17
C2082HA1F6 E8
C2082HA1F17 E8
C2082HA1F25 E17
C2082HA1F76 E8
C2082HA1F78 E8
C2082HA2F6 E8
C2082HA2F22 E8
C2082HA2F77 E8
C2082HAA1F1 E10
C2082HAA1F2 E10
C2082HAA1F2-D3F2 E35
C2082HF1A2 E14
C2082HF76 E19
C2082HF80-2-PA6 F7
C2082HF93 E25
C2082HF94 E3
C2082HHA1F4 E8
C2082HHA1F5 E8
C2082HHP I24
C2082HK1F E9
C2082HP I24
C2082HPSS O17
C2082HSF2 F4
C2082HW E14, E25
C2082K2F E9
C2082SA1F2 E12
C2082SSA2F3 O22
C2082SSA2F4 O22
C2082SSSA2F1 O23
C2082W E14
C2100 E1, E5, E30
C2100-1LTR F9
C2100-1LTRF2 F9
C2100F26GK E29
C2100H E1, E5, E30
C2100HF2 E26
C2100HF4 E25
C2100HF5 E25
C2100HF6AA1 E10
C2100HK1F E9
C2100HS-P F4
C2100HSA1 E11
C2100HWA2 E14
C2100SLRF26GK E29
C2102 E1, E5, E30
C2102H E1, E5, E30
C2102H-D3F5 E31
C2102HA1F E9
C2102HA2F E9
C2102HK2-M8 E14
C2102HP I24
C2120 E1, E5
C2120AA1F1 E10
C2120H E1, E5, E30
C2120HSSF14GK O29
C2120SAA2F1 E13
C2122 E1, E5
C2122H E1, E5, E30
C2122HA1F E9
C2122HAA1 E10
C2122HPF1 I27
C2122HSA1F1 E11
C2160 E1, E5
C2160H E1, E5, E30
C2160HSK0F1 E12
C2162 E1, E5
C2162A2F E9
C2162F1 E20
C2162H E1, E5, E30
C2162HA2F E9
C2162HF1A2 E9
C2162HK1-M8 E9
C20505B B20
C20525 F5
C20525F1 F4
C20600 E36
C20605F7 F4
C204052-PSR F4
C205052 F5
CA2 N47
CA5 N47
CA6 N47
CA414-CPEF1 N52
CA550 N23
CA550(U N23
CA550-C6E N46
CA550-C6EF1 N46
CA550-C11E N46
CA550-C11EJ N46
CA550-C13E N46
CA550-CPE N48
CA550-CPEF1 N52
CA550-CPEF2 N51
CA550-CPEF3 N48
CA550-CPEF4 N52
CA550-CPEF5 N52
CA550-CPEF6 N48
CA550-D1 N59
CA550-D2 N59
CA550-D4 N59
CA550-F7A N56
CA550-G27 N54
CA550-G27S N54
CA550-G50 N56
CA550-G50S N56
CA550-GX N54
CA550-LV41N N48
CA550-LV41NF1 N46, N48
CA550A1F5 N38
CA550A29 N34
CA550AH N57
CA550AHF1 N57
CA550AID N57
CA550AK4F2 N34
CA550AK29M N34
CA550D N22
CA550F N44
CA550F1 N38
CA550F2 N34
CA550F4 N23
CA550F4-C6E N46
CA550F4K19 N34
CA550F4K19F1 N36
CA550F5 N23
CA550F5-F N44
CA550F5-F14 N44
CA550F5-F14SF N44
CA550F5-F17 N44
CA550F5-F17-GF1 N45
CA550F5-G N44
CA550F5AK29M N34
CA550F5K1 N34
CA550F5K29F1 N34
CA550F5K39M N39
CA550F5SD N43
CA550F5SDF1 N42
CA550F6 N59
CA550F7 N41
CA550F8SD N43
CA550F9 N59
CA550F10 N43
CA550F11 N54
CA550F14 N44
CA550F14-G N45
CA550F14-GF1 N45
CA550F14-GF2 N45
CA550F14-GF3 N45

CA550F16 N44
CA550F17-G N45
CA550F19 N44
CA550F20K19 N38
CA550F21 N53
CA550F24 N44
CA550G N56
CA550GKF1 N55
CA550GKF2 N55
CA550GKF3 N55
CA550H N23
CA550HF4 N43
CA550HF5 N43
CA550HF6 N43
CA550HF6-G N45
CA550HF7K1 N36
CA550HF8-LV41N N46
CA550HF10-LV41N N46
CA550HK1 N36
CA550HK39M N39
CA550HSD N43
CA550HSD-G N45
CA550HSDF3 N42
CA550HSDF3-G N45
CA550K1 N36
CA550K1F1 N34
CA550K1F2 N35
CA550K1F3 N36
CA550K1F4 N37
CA550K1F6 N36, N37
CA550K1F7 N35
CA550K1F8 N35
CA550K1F9 N36
CA550K1F15 N34
CA550K1F16 N34
CA550K1F17 N35
CA550K1F18 N34
CA550K1F20 N38
CA550K1F21 N37
CA550K6 N58
CA550K8 N58
CA550K9 N58
CA550K11 N35
CA550K17 N35
CA550K18 N36, N37
CA550K19 N37
CA550K19F1 N37
CA550K19F2 N37
CA550K19F3 N38
CA550K20 N35
CA550K22 N35
CA550K25 N35
CA550K29F1 N35
CA550K39M N39
CA550K39MF2 N39
CA550K39MF3 N39
CA550K39MF4 N39
CA550SD N42
CA550SDF1 N43
CA550SDF1-G N45
CA550SDF2 N43
CA550SDF3 N43
CA550SDF4 N42
CA550SDF6 N43
CA550SDF7 N43
CA550SDF10 N42
CA550SDF11 N43
CA550SDF12 N43
CA550SDFS N43
CA550SEF1 N44
CA550SEF1-G N45
CA550V N23
CA550V-C6EF1 N46
CA550V-F15 N44
CA550V-F15-G N45
CA550VF N44
CA550VF1 N43
CA550VF2 N23
CA550VF2K1 N35
CA550VF2SE N44
CA550VF2SEF1 N44
CA550VF2SEF3 N44
CA550VF2SEF3-G N45
CA550VF2SEF3-GF1 N45
CA550VF2SEF5 N44
CA550VF2SEF6 N44
CA550VF2SEL-G N45
CA550VF14 N44
CA550VF14-G N45
CA550VK1 N35
CA550VK1F1 N35
CA550VK1F3 N37
CA550VK1F4 N37
CA550VK18 N36
CA550VK19F1 N38
CA550VSD N43
CA555 N23
CA555D N22
CA555F1 N50
CA555F2 N50
CA555K1 N36
CA557 N23
CA557(U N23
CA557A1F1 N38
CA557A1F3 N38
CA557AK4 N38
CA557AK4F1 N38
CA557D N22
CA557F1 N39
CA557F2 N37
CA557F3 N41
CA557F4 N41
CA557F5K1 N38
CA557F7K1 N35
CA557F9K1 N38
CA557F14 N44
CA557K1 N35
CA557K1F2 N35
CA557K1F3 N35
CA557K1F5 N38
CA557K1F8 N38
CA557K1F9 N38
CA557K39M N39
CA557K39MF1 N39
CA557K39MF2 N39
CA557K39MF3 N39
CA557K39MF6 N39
CA557K39MF17 N39
CA557SFD N44
CA557SFDF1 N44
CA620 N23
CA620-C13E N46
CA620-C30E N51
CA620-D1F1 N59
CA620A1F1 N37
CA620D N22
CA620F2 N55
CA620F4 N62
CA620K1F2 N35
CA620K1S N35
CA620K12 N58
CA620W N37
CA627 N22
CA627-CPE N49
CA627-CPEF1 N51
CA627-CPEF2 N51
CA627-CPEF3 N49
CA627-CPEF4 N51
CA627-CPEF5 N52
CA627-CPEF9 N51
CA627-CPEF13 N52
CA627-CPEF16 N52
CA627-CPEF18 N52
CA627F1 N22
CA642 N62
CA642S103 N64
CA645F1 N62
CA645K1 N27
CA645SE N30
CA650 N62
CA650F1 N61
CA650F2 N62
CA650F3 N61
CA650F4 N62
CA960 N23
CA2060-C6E N46
CA2060A1F1 N38
CA2060F1SD N31
CA2060H N23
CA2060H-7AUE N52
CA2060H-C2E N49
CA2060H-C4E N49
CA2060H-C5E N49
CA2060H-C6E N46
CA2060H-CPEF2 N52
CA2060H-CPEF3 N52
CA2060HA1F1 N38
CA2060HF2-CPEF1 N49
CA2060HK1F2 N38
CA2062H N22
CAE44151 N23
CAE44151S1 N64
CAE44151S2 N64
CC1400 I19
CH25 M7
CL04-2X3 C11
CL04-3X4 C11
CL04-4X5 C11
CL208F1-55.8N C8
CTBLL588 M7
CTL566 M7
CZGS38F10 N5
CZGS38F10K1 N6
CZGS38F10SD N9
CZGS38F11 N5
CZGS38F11SDF1 N9
CZGS38F13 N5
CZGS38F13K1F1 N6
CZGS38HF12 N5
CZGS38HF36 N5

D

D1F4-2 D48
D90F1 M7
D5400 J15
D5640 J15
DH67T-ROD N65
DH1605F1 C4
DH2198 L5, L6
DH2600 L12
DH2600-AS2 L14
DH2600-AS2F2 L14
DH4202HP I24
DH4203HP I24
DH4203HPSS O17
DH4204HP I24
DH5500A C4
DH6042F1 C4
DH6042F2 C4
DH6042F3 C4
DH6042F4 C4
DH6042F5 C4
DH6042F6 C4
DH8403HP I24
DH8404HP I24
DH8406HP I24
DH9063 L5, L6
DH16500HP I23
DH16500HPSS O15
DH42035HP I24
DHAPBPF1 C2
DHAPI4P C2
DHAPI4PF1 C3
DHAPI4PH C2
DHE238R C2

F

F1-3-62-C26 F7
F1-3-62-C32 F7
F1-85-C45 F1
F1-D3F30 E35
F2-3-81-P28.4 F7
F2-P F5
F3K1F2 N34
F3S-3-C15/P15 F7
F4-G N45
F8-27-C16 F1
F19S-44 M7
F19S-66 M7
F19V-44 M7
F19V-66 M7
F19V-88 M7
F19VF1-66 M7
F25-34 M7
F25-66 M7
F25-66F1 M7
F49SS O26
F51SS O26
F52-C14.5/P14.5 F7
F56-STC G11
F122 M6
F169 D39
F207 D39
F1223 M6
F1266F1 M6
F1422-DD3 M12
F2022-D2 M12
F2422-D2 M12
F2422F1-D2 M12
F2544F1 G21
F3144F1 G21
FB156 M11
FB156S M11
FB196 M11
FB196S M11
Fl023 M6
Fl125 H19
FL523 M6
FL523F1 M6
FL523F3 M6
FL523F4 M6
FL644 M6
FL666 M6
FL688 M6
FL823F1 M6
FL844 M6
FL922 M6
FL922F4 M6
FL944 M6
FL945 M6
FL956 M6
FL966 M6
FL966F3 M6
FL988 M6
FL1244 M6
FL2044 M7
FLC534 M6
FLC545 M6
FLC556 M6
FLC567 M6
FLC578 M7
FLC623 M7
FLC634 M7
FLC823 M7
FLC834 M7
FLC845 M7
FLC856 M7
FLC867 M7
FLC878 M7
FLC1034 M7
FLC1045 M7
FLC1056 M7
FLC1067 M7
FLC1078 M7

FlP101.6 H11
fQ)-1 B15
fQ)-2 B15
FV40 H18, H20
FV40A2.02P40 H22
FV40F3P63 H19
FV63 H18, H20
FV63A2F4S100 H22
FV63F11P100 H19
FV63F12P125 H19
FV63F18-P-63 I7
FV90 H18, H20
FV90A2F1P85 H22
FV90A2F1P100 H22
FV90B50 H19
FV90F9B100 H19
FV90F10B100 H19
FV112 H18, H20
FV112F1A1P80 H22
FV112F1A1P100 H22
FV112F14A2P125 H22
FV112S63 H19
FV140 H18, H21
FV140B80 H19
FV140F27F125 H19
FV140P H19
FV180 H18, H21
FV180B150 H19
FV180F21A2P160 H22
FV250 H18, H21
FV250K2F8P250 H22
FV315 H18, H21
FVC63 H24
FVC63F1B40 H30
FVC63F2B50 H30
FVC63F3P63 H30
FVC63F15P63 H30
FVC90 H24
FVC90F1P63 H30
FVC90F6F125 H30
FVC112 H24
FVC112F2P100 H30
FVC140 H24
FVC140F1B80 H30
FVC140F6P109 H30
FVC140F7F160 H30
FVC180 H24
FVC250 H24
FVC315 H24
FVR40 J6
FVR40F4B J9
FVR40F4B100 J8
FVR40F5P J9
FVR40F5P80 J8
FVR40F6B J9
FVR40F6B100 J8
FVR63 J6
FVR63F2B J9
FVR63F2B100 J8
FVR63F3B J9
FVR63F3B100 J8
FVR90 J6
FVR90F1B J11
FVR90F1B125 J10
FVR90F8B J9
FVR90F8B100 J8
FVR112 J6
FVR112F3B J11
FVR112F3B155 J10
FVR112F4P J11
FVR112F4P150 J10
FVR140 J6
FVR180 J6
FVR180F2B J11
FVR180F2B160 J10
FVR250 J6
FVT40 H23
FVT63 H23
FVT63F3-PZ-100 L31
FVT90 H23
FVT112 H23
FVT140 H23
FVT180 H23
FVT250 H23
FVT315 H23

G

G27S N70

H

H124 K25
H124H K25
HB12.7 I27
HB25.4 I22
HB25.4F2 I24
HB25.4F2SS O17
HB25.4F4 I24
HB25.4F6SS O15
HB25.4F7 I22
HB25.4F8 I22
HB25.4F10SS O14
HB28.58 I22
HB30SS O17
HB35 I22
HB38.1 I22
HB38.1F1 I22
HB38.1F2 I24
HB38.1F3 I22
HB38.1F4 I22
HB38.1F5SS O16
HB38.1F6 I20
HB38.1F6R I24
HB38.1F7 I27
HB38.1F8 I21
HB38.1F9 I27
HB38.1F10 I22
HB38.1F15 I21
HB40F1 I24
HB41.3 I20
HB41.4 I24
HB41.75F5 I20
HB45SS O17
HB50 I25
HB50.8 I23
HB50.8F1 I21
HB50.8F3 I25
HB50.8F4 I23
HB50.8F8 I25
HB50.8F9 I25
HB50.8F11 I25
HB50.8F12 I25
HB50.8F13SS O15
HB50.8F14 I23
HB50.8F18 I25
HB50.8F20 I25
HB50.8F21SS O15
HB50.8F26 I25
HB50.8F42SS O15
HB50.8SS O15
HB50.42 I25
HB50F1C30 I23
HB50F3SS O17
HB50F4 I23
HB50F4SS O15
HB50F5SS O17
HB50F6SS O17
HB50F9 I25
HB50F12 I25
HB55 I21
HB55F1 I21
HB55F2 I25
HB57 I25
HB60F6 I23
HB60F7 I23
HB63 I23
HB63.5F1 I25
HB63.SF3 I23
HB63F1 I23
HB63F2 I23
HB63F3 I23
HB63F4 I23
HB63F6 I23
HB63F6SS O15
HB63F7 I23
HB63F8 I23
HB63F11 I25
HB63F12 I25
HB63F14 I23
HB63F17 I27
HB65 I25
HB65F1 I25
HB75 I25
HB76.2 I25
HB76.2F2 I25
HB76.2F6 I25
HB76.2F9 I25
HB80 I25
HB80F3 I23
HB80F4 I25
HB86 I25
HB100 I23
HB100F3 I25
HB100F6 I25
HB100F7 I26
HB100F7SS O15
HB100F8 I23
HB100F9 I26
HB100F10 I26
HB100F11 I26
HB100F13 I26
HB100F14 I26
HB100F16 I23
HB100F18 I26
HB100F19 I26
HB100F20 I26
HB125 I26
HB127F1 I26
HB150F1 I26
HB152F3 I26
HP12.5 I21
HP20F1 I22
HP20SS O16
HP35 I22
HP35SS O15
HP38.1F9 I22
HP38.1F10 I27
HP40 I26
HP40F1 I21
HP40F2 I21
HP40F4 I22
HP41.75F1 I22
HP41.75F1SS O15
HP41.75F2 I22
HP41.75F3 I23
HP41.75F3SS O15
HP41.75F6 I23
HP50 I26
HP50.8 I26
HP50F1 I21
HP50F2 I23
HP50F4 I26
HP50F7 I21
HP50F8SS O15
HP50F10 I21
HP50F10SS O14
HP50F16 I21
HP76.2F7 I26
HP76.2F9 I26
HP100 I26
HP100F1 I26
HP101.6F1 I26
HP101.6F2 I26
HP101.6F6 I26, I27
HP101.6F8 I26
HP130 I26, I27
HP150F1 I27
HP152 I26
HP152.4F1 I26
HP152.4F4 I26
HV4TT-14X13N C8
HX16AF4 I10
HX16AF10 I11
HX16AF13 I14
HX16AF16 I13
HX16AF24 I13
HX16AF25 I13
HX16AF27 I11
HX16AF29 I10
HX16AF30 I12
HX16AF32 I10
HX16AF37 I12
HX16AF38 I12
HX16AF39 I16
HX16AF42 I9
HX16AF43 I12
HX16AF47 I16
HX16AF49 I13
HX16AF51 I13
HX16AF54 I12
HX16AF56 I15
HX16AF60 I11
HX16AF61 I13
HX16BF2 I9
HX16BF8 I9
HX16BF10 I10
HX16BF27 I9
HXP25.4F1 I16
HXP31.75 I15

K

K0F1 D17
K1F1 D15, D17, E14, N37, N60
K1F2 D15, E14, N36
K1F3 D15, N36
K1F6 N34
K1F7 N34
K1F9 N34
K1F10 D15
K1F11 D15
K1F12 D15
K1F32 D17
K2-G2F1 G32
K2.03B100 H12
K2F1 D15, D17, E14
K2F2 D15, E14
K2F5 D17
K2F7 E14
K2F30 D15
K443 I36
K2062HSF6 F4
K2062SR2F1-PA6 F5
KP503F54-B G22

L

L422 M21
L423 M21
L434 M21
L444 M21
L446 M21
L466 M21
L522 M21
L523 M21
L534 M21
L546 M21
L566 M21
L622 M21
L623 M21
L634 M21
L644 M21
L646 M21
L666 M21
L822 M21
L823 M21
L834 M21
L844 M21
L846 M21

L866 M21
L1022 M21
L1023 M21
L1034 M21
L1044 M21
L1046 M21
L1066 M21
lB100 H12
LF10 M6
LF30 M26
LF36 M15
LF36F2 M15
LF36F3 M15
LF36F4 M15
LF36F6 M15
LF36F7 M15
LF36F8 M15
LF105 M7
LF150F1 K8
LF152F1 K7
LF155 K7
LF1234 M6
LF1246 M6
LF8844F1 M7
LF31109 M7
LH0822 M1, M18
LH0822B M21
LH0823 M1, M18
LH0823B M21
LH0832F6 M8
LH0834 M1, M18
LH0834B M21
LH0844 M1, M18
LH0844B M21
LH0844F M8
LH0844F5 M8
LH0846 M1, M18
LH0846B M21
LH0866 M1, M18
LH0866B M21
LH0888 M1
LH1022 M1, M18
LH1022B M21
LH1023 M1, M18
LH1023B M21
LH1034 M1, M18
LH1034B M21
LH1034F2 M8
LH1044 M18
LH1044BL544 M1, M21
LH1046 M1, M18
LH1046B M21
LH1066 M1, M18
LH1066B M21
LH1088 M1
LH1222 M1, M18
LH1222-D2 M12
LH1222-DD3F1 M12
LH1222B M21
LH1222F7-DD3 M12
LH1223 M1, M18
LH1223B M21
LH1223F1 M8
LH1223F3 M8
LH1234 M1, M18
LH1234B M21
LH1234F3 M8
LH1244 M1, M18
LH1244B M21
LH1245F1 M8
LH1246 M1, M18
LH1246-DD3F1 M12
LH1246B M21
LH1266 M1, M18
LH1266B M21
LH1288 M1
LH1622 M1, M18
LH1622-D2 M12
LH1622-DD3F1 M12
LH1622-DD3F2 M12
LH1622B M21
LH1622F1 M12
LH1623 M1, M18
LH1623B M21
LH1634 M1, M18
LH1634B M21
LH1644 M1, M18
LH1644B M21
LH1646 M1, M18
LH1646B M21
LH1646F3 M9
LH1666 M1, M18
LH1666B M21
LH1688 M1
LH2022 M2, M19
LH2022-DD3F1 M12
LH2022B M21
LH2023 M2, M19
LH2023B M21
LH2034 M2, M19
LH2034B M21
LH2044 M2, M19
LH2044B M21
LH2044DG M16
LH2046 M2, M19
LH2046B M21
LH2054F4 M9
LH2066 M2, M19
LH2066B M21
LH2066DG M16
LH2066F1 M9
LH2088 M2
LH2422 M2, M19
LH2423 M2, M19
LH2434 M2, M19
LH2444 M2, M19
LH2444DG M16
LH2446 M2, M19
LH2466 M2, M19
LH2466DG M16
LH2466F2DG M16
LH2488 M2
LH2488DG M16
LH2488F4DG M16
LH2822 M2, M19
LH2823 M2, M19
LH2834 M2, M19
LH2844 M2, M19
LH2844DG M16
LH2846 M2, M19
LH2846DG M16
LH2866 M2, M19
LH2866DG M16
LH2888 M2
LH3222 M2, M19
LH3223 M2, M19
LH3234 M2, M19
LH3234DG M16
LH3244 M2, M19
LH3244DG M16
LH3244F6 M9
LH3246 M2, M19
LH3246DG M16
LH3266 M2, M19
LH3266DG M16
LH3266DGF1 M16
LH3266F2 M9
LH3288 M2
LH3288DG M16
LH3288DGF2 M16
LH3288F1 M9
LH3288F7DG M16
LH3288F9 M9
LH3288F10 M9
LH4022 M2, M19
LH4023 M2, M19
LH4034 M2, M19
LH4044 M2, M19
LH4044DG M16
LH4046 M2, M19
LH4066 M2, M19
LH4066DG M16
LH4088 M2
LH081010F8 M8
LH281010F1 M9
LL0622 M3
LL0622F4 M9
LL0622F7 M10
LL0634F4 M9
LL0644 M3
LL0644F4 M9
LL0644F7 M10
LL0666F4 M9
LL0822 M3, M20
LL0822F13 M10
LL0844 M3, M20, M23
LL0844F6 M10
LL0844F7 M10
LL0844F13 M10
LL0866 M3, M20
LL0888 M3
LL0888F1 M10
LL0888F2 M10
LL1022 M3, M20
LL1044 M3, M20, M23
LL1044F7 M10
LL1066 M3, M20
LL1066F3 M10
LL1088 M3
LL1222 M3, M20
LL1222F3-D2 M12
LL1222F5-DD3 M12
LL1222F5-DD3F1 M12
LL1244 M3, M20, M23
LL1266 M3, M20
LL1266F2 M10
LL1266F3 M10
LL1266F6 M10
LL1266H M10
LL1288 M3
LL1622 M4, M20
LL1622-D2 M12
LL1622F6 M10
LL1622F7-DD3 M12
LL1622F7-DD3F1 M12
LL1623F1-DD3 M12
LL1644 M4, M20, M23
LL1666 M4, M20
LL1688 M4
LL2022 M4, M20
LL2044 M4, M20, M23
LL2066 M4, M20
LL2066F6 M10
LL2088 M4
LL2422 M4, M20
LL2444 M4, M20, M23
LL2466 M4, M20
LL2466DG M24
LL2488 M4
LL2488F1 M11
LL2822 M4, M20
LL2844 M4, M20, M23
LL2866 M4, M20
LL2888 M4
LL3222 M4, M20
LL3244 M4, M20, M23
LL3244DG M17
LL3244F1 M11
LL3244F2 M10
LL3244F2DG M24
LL3244F3 M11
LL3244F4 M11
LL3244F8 M10
LL3266 M4, M20
LL3266DG M17
LL3266DGFl M24
LL3266F1 M11
LL3266F3 M11
LL3266F4 M11
LL3266F6DG M24
LL3288 M4
LL3288DG M17
LL3288DGF2 M24
LL3288F1 M11
LL3288F3 M11
LL3288F7 M11
LL3288F8 M10
LL4022 M4, M20
LL4044 M4, M20, M23
LL4044F4 M11
LL4066 M4, M20
LL4066DG M24
LL4066F1 M11
LL4066F5DG M17
LL4088 M4
LL4088F1 M11
LL4088F2 M10
LL4088F3 M11
LL4088F4DG M17
LL4088F20G M24
LL4822 M4, M20
LL4844 M4, M20, M23
LL4866 M4, M20
LL4888 M4
LL4888F3 M11
LL4888H M10
LL06666*6 M3
LL101212F4 M10
LL101212F5 M10
LL321010F1 M11
LL321010F10DG M17
LL481010F3 M11
LV40 N63
LV40K1 N63

M

M1EK2F1S125 H12
M15F6B160 H5
M18F1A1P50 H9
M18f1A1P50 H10
M18F1P50 H3
M18F2A1.02P50 H9, H10
M18F2A1F1.32P50 H9, H10
M18F4A1.02S50 H9, H10
M18F7D3P75 H15
M18F8K1.03P50 H9, H10
M20 H1, H2, H6
M20*40.0 H1
M20A2F1S50 H9, H10
M20D H15
M20D1F1.02P80 H15
M20D1F2.02P80 H15
M20K1F2.02S50 H9, H10
M20PFl50 H3
M20SS O20
M22F1P50 H3
M22P50 H3
M28 H1, H2, H6
M28*50.0 H1
M28F1A2P80 H9, H10
M28F3A2F100 H9, H10
M28F3A2P63 H9, H10
M28F4S50 H3
M28F5P63 H3
M28F8P80 H3
M28SS O20
M32A1.02P50 H9, H10
M32A1F1P50 H9, H10
M32A1F2.02PF150 H9, H10
M35F1P35 H15
M35F2P35 H3
M35F2S35 H3
M35F4A1.01C H10
M35F4A1.01C69 H9
M35F4C69 H3
M35F5P50.8 H3

M35F7D1P35 H15
M35F9P50 H3
M35F10P50 H3
M35F11P35 H3
M40 H1, H2, H6
M40A2F2F80 H9, H10
M40F1P125 H9, H10
M40F4P50 H3
M40F5A2S65 H10
M40F5A2565 H9
M40F5S65 H3
M40F6P80 H3
M40F10F76.2 H9, H10
M40F17A2P50.8 H9, H10
M40F17K1.10P50.8 H9, H10
M40F17P50.8 H3
M40F22P100 H3
M40F31A2.02P50.8 H9, H10
M40FA1.02P50 H9, H10
M40FA1F1.02P50 H9, H10
M40FA2F1.08P50 H9, H10
M40FA2P50 H9, H10
M40FK2F1P50 H9, H10
M40PFl100 H3
M40SS O20
M56 H1, H2, H6
M56*63.0 H1
M56A2P125 H9, H10
M56F1P100 H9, H10
M56F2F100 H9, H10
M56F2P100 H9, H10
M56F3F.06100 H9, H10
M56F3P100 H9, H10
M56F4P100 H57, H58
M56F6A2.02PF1100 H9, H10
M56F7P100 H57, H58
M56F8P100 H9, H10
M56F9F1100 H9, H10
M56F9P100 H57, H58
M56F14P100 H3
M56F14S63 H3
M56F14S80 H3
M56F21P100 H3
M56F23F100 H9, H10
M56F24A2F100 H57, H58
M56F26A2.02F125 H9, H10
M56F28P100 H3
M56F38A2P100 H9, H10
M56PF180 H3
M56SFl80 H3
M56SS O20
M75D3P100 H15
M75F4P100 H11, H12
M75P75 H4
M75P100 H9, H10
M75P100F1 H11, H12
M75P100F3 H11, H12
M75PF1100 H11
M75PFl100 H12
M80 H1, H2, H6
M80A2F1F160 H11, H12
M80F3P125 H4
M80F4A100 H4
M80F4B100 H4
M80F4B125 H4
M80F4BFl125 H4
M80F5K1B100 H12
M80F6P75 H4
M80F8B80 H4
M80F8B100 H4
M80F8B125 H4
M80F8S80 H4
M80F9S80 H4
M80F12P100 H4
M80F29s100 H13
M80F30S100 H4
M80F31B100 H4
M80F41P100 H13
M80F43K2P200 H11, H12
M80K1F1P100 H11
M80K1FFP100 H12
M80K2F H12
M80K2F6P100 H8
M80P100F1 J8, J9
M80SS O20
M100F11P101.6D H15
M100F11P101.6D3 H15
M100P80 H4
M100P152.4D H15
M100P203.2D3 H15
M112 H1, H2, H7
M112*80.0 H1
M112A2F18.04P100 H11, H12
M112A2F21F315 H11, H12
M112F2P125 H4
M112F3F200 H11
M112F5K2P100 H11, H12
M112F6B100 H4
M112F6B125 H4
M112F6P125 H4
M112F7P125 H4
M112F8S100 H4
M112F9A2F180 H11
M112F12-S-70 K31, K32
M112F14 H4
M112F15B100 H4
M112F16K1P125 H11, H12
M112F18B125 H4
M112F18S100 H4
M112F21P160 H5
M112F24S100 H5
M112F33P100 H4
M112F34P100 H14
M112F38A2.04P100 H11, H12
M112F39P80 H14
M112F44-P-160 L31
M112F45-P-160 L25
M112F47B160 H5
M112F49B100 H4
M112F52SDB100 H13
M112F58A2-SR1S-100 L25
M112F60B125 H4
M112F61B80 H4
M112GA2F2PA6200 J28
M112K2F1S125 H11
M112K2F2B100 H12
M112K2F4P200 H8
M112K4-S-100 H8
M112PF180 H5
M112SS O20
M160 H1, H2, H7
M160*100.0 H1
M160A2F1.02P152.4 H11, H12
M160A2F7F200 H11, H12
M160A2F8F200 H11, H12
M160F1 H12
M160F1K2P100 H11, H12
M160F1P100 H5
M160F2B100 H12
M160F3K1 H11
M160F3K1F1P101.6 H12
M160F6F200 H59
M160F7F200 H59
M160F12K2S100 H11, H12
M160F23S160 H5
M160F25K2.04B100 H11, H12
M160F35-S-200 L23
M160F37-S-250 L23
M160F40P200 H5
M160F41B100 H5
M160F41K2B100 H12
M160F49-S-125 L23
M160F52-S-250 L23
M160F53SR2-S-160 L21
M160F55K2B100 H12
M160F58D1.04P125 H15
M160K2F2S200 H11, H12
M160SS O20
M180P J9
M180P100 J8
M224 H1, H2, H7
M224*125.0 H1
M224F1K2P200 H11, H12
M224F3P160 H4
M224F6A2P160 H11, H12
M224F9F200 H59
M224F29A2F200 H11, H12
M224F30B125 H5
M224F31B200 H5
M224F36S I33
M224F42K2S200 H11, H12
M300F6P152.4 H5
M310F1-P-150 J11
M310F1P J9
M310F1P125 J8
M310F1P150 J10
M310P J9
M310P125 J8
M315 H1, H2, H7
M315*160.0 H1
M315F1B125 H5
M315F10S250 H5
M315F12S200 H5
M315F16S250 H5
M315F17B160 H5
M315F22A2F400 H11, H12
M315F47A2FZ250 H57, H58
M315F51B200 J4
M315F52S250 H5
M315K2F1P250 H11, H12
M315S170 H5
M450 H1, H2
M450F8-S-200 L23
M450F9-S-250 L23
M450F13-S-250 L23
M450F16-B-250 L21
M450F17-S-200 L23
M450F20-B-250 L21
M450F22-B-250 L21
M450F26A2F400 H11, H12
M450F28S200 H5
M565Fl63 H3
M630A2F400 H57, H58
M630B250 H5
M1125150 H5
MC4 H31
MC18F1P40 H29
MC21F1P76.2 H29
MC28 H17
MC28F1P80 H29
MC28F2B63 H29
MC28SS O21
MC35F1P35 H29
MC35F2P50 H29
MC35SS-P-50 O17
MC37F1P35 H29
MC40F9P50 H29
MC40F11P50.8 H29
MC40F12-B75 H29
MC40F21P50.8 H29
MC40F24B60 H29
MC40F25-P-63.5 H31
MC40F28P50.8 H29
MC40F29P50.8 H29
MC40PF1100 H29
MC56 H17
MC56F1P80 H29
MC56F1S80 H29
MC56F2P100 H29
MC56F5P80 H29
MC56F6P100 H30
MC56P85 H29
MC56SS O21
MC60F7P152.4 H30
MC60F7P203.2 H30
MC60F10P127 H30
MC60F12P88.9 H30
MC60F14P101.6 H30
MC60F15B101.6 H30
MC112 H17
MC112F1P100 H30
MC112SS O21
MC150F2P110 H30
MC220B152.4 H30
MC224 H17
MC224SS O21
MC300F1F254 H30
MC300F2F203.2 H30
MCL267150T J5
ME40F2P50.8 H61
ME40F2P76.2 H61
ME40F2P101.6 H61
ME40F3P76.2 H61
ME40F3P101.6 H61
ME40F3P503 H61
ME160F2P101.6 H61
ME160F2P1524 H61
MH2F3F200 H12
MH2F9A2F180 H12
MP15 M25
MP20 M25
MP25 M25
MP30 M25
MP35 M25
MP40 M25
MP45 M25
MP50 M25
MP50F2 M26
MP55 M25
MP60 M25
MP70 M25
MP70F1 M26
MP70F2 M26
MP70F3 M26
MP80 M25
MP80F1 M26
MP90 M25
MP90F1 M26
MP90F2 M26
MP100 M25
MP110 M25
MP110F1 M26
MP120 M25
MR22F1B J9
MR22F1B100 J8
MR56 J6
MR80 J6
MR80F3B J11
MR80F3B160 J10
MR80F5B J9
MR80F5B125 J10
MR80F7B J9
MR80F7B125 J10
MR80F8B J11
MR80F8B125 J10
MR112 J6
MR112F7S J9
MR112F7S100 J8
MR112F8S J9
MR112F8S100 J8
MR112F11B J11
MR112F11B125 J10
MR112F15B J11
MR112F15B150 J10
MR112F16B J11
MR112F16B150 J10
MR112F18B125 J10
MR112F19B J11
MR112F19B100 J8
MR112F20B J11
MR112F20B125 J10
MR112F21B100 J5
MR112R18B J11
MR160 J6
MR160F4S J11
MR160F4S160 J10

MR160F7S J9
MR160F7S100 ..... J8
MR160F8S J9
MR160F8S100 ..... J8
MR160F10B J9
MR160F10B100 ..... J8
MR160F11S J9
MR160F11S100 ..... J8
MR160F13B J11
MR160F13B125 ..... J10
MR160F16S J11
MR160F16S100 ..... J8
MR160F18B J11
MR160F18B125 ..... J10
MR160F20B J9
MR160F20S100 ..... J8
MR224 ..... J6
MR224F1S J9
MR224F1S125 ..... J8
MR315 ..... J6
MR450F1S J11
MR450F1S200 ..... J10
MT18F1S50 ..... H61
MT18F3P50 ..... H61
MT18F10-S-50 ..... H61
MT20 ..... H16
MT28 ..... H16
MT28F1-P-63 ..... H61
MT40 ..... H16
MT40F1-P-63 ..... H61
MT40F3-P-80 ..... H61
MT40F5-P-63 ..... H61
MT40FP50 ..... H61
MT40FP100 ..... H61
MT56 ..... H16
MT56F1-B-100 ..... H61
MT56F10-P-63 ..... H61
MT80 ..... H16
MT80F2P63 ..... H61
MT80F2P100 ..... H61
MT80F4P100 ..... H61
MT112 ..... H16
MT160 ..... H16
MT224 ..... H16
MT315 ..... H16
MT315F3P250 ..... H61
MT450 ..... H16
MXS432 ..... C1
MXS882 ..... C1
MXS882F1 ..... C1
MXS1242 ..... C3
MXS1242F1 ..... C3
MXS3075 ..... C2
MXS3075F1 ..... C2
MXS3075F1SH C2
MXS3075F2 ..... C2
MXS3075F3 ..... C2
MXS3075F4 ..... C2
MXS3075F6 ..... C2

N

NE15 ..... I32
NE30 ..... I32
NE50 ..... I32
NE100 ..... I32
NE150 ..... I32
NE200 ..... I32
NE300 ..... I32
NE400 ..... I32

O

ORSDF1 ..... E15

P

P1S2F208K2 ..... H52
P2DD3-15 ..... D52
P7F1 ..... C16
P10.16F76 ..... H47
P11.5 ..... B16
P11.5SS O27
P12.7F3SS O26
P12.7F5SB B18
P12.7F10SB B18
P12.7F12 ..... B19
P12.7F14SBSS O27
P12.7F15 ..... H32
P12.7SB B18
P12.75SB B16
P12.75SBF1 ..... B16
P13.7K H40
P14.85K H40
P15F1-B C18
P16.7F1K H40
P19.05F1 ..... H32
P19.05F2 ..... H32
P19.05F5 ..... H32
P19.05F6 ..... H32
P19.05F50-B C18
P20-B C18
P20F1 ..... H32
P20F3-B C18
P20F6-D3 ..... H65
P20SB B19
P20SBF1 ..... B19
P22 ..... H32
P22.23F1 ..... H32
P22.225F3-B C18, N1
P22.225F10-B C18
P25-B C18
P25.4F5 ..... H32
P25.4F8 ..... H32
P25.4F9 ..... H32
P25.4F10 ..... H32
P25.4F21-B C18
P25F1-B C18
P25F4 ..... H32
P25F5 ..... H32
P25F7 ..... H32
P26 ..... H32
P28 ..... H40
P28F1 ..... H39, H40
P28F3 ..... N64
P30 ..... H32
P30-D3F1 ..... H65
P30F1 ..... H32
P30F2-B C18
P30F6-B C18
P30F7 ..... H32
P30F10 ..... H32
P30GKF1 ..... H64
P31.75F1 ..... H61
P31.75F2 ..... G25
P31.75F3 ..... G26
P31.75F5-B C18
P31.75F9-D1 ..... H65
P31.75F11 ..... H38
P31.75F12 ..... H32
P31.75F14-1STC G26
P31.75F18-1STC G25
P31.75GK H64
P35-44 ..... M7
P35F2-B C18
P35F4 ..... H32
P35F5-B C18
P35F7 ..... H32
P36-B C18
P36.67A2 ..... H40
P38.1F2 ..... H40
P38.1F11 ..... H32
P38.1F17 ..... H32
P38.1F19 ..... H32
P38.1F24-D1 ..... H65
P38.1F25A1 ..... H40
P38.1F25A2 ..... H40
P38.1F28 ..... I29
P38.1F29 ..... G25
P38F10K H39, H40
P38F11K H40
P38F11KI3 ..... H39
P38F13K H39, H40
P39.75A1 ..... H40
P39.75A2F2 ..... H40
P40 ..... I28
P40-B C18
P40F3 ..... I18
P40F5 ..... I18
P40F9 ..... H32
P40F12A2 ..... H40
P41.3 ..... N62
P41.3F4 ..... H32
P41.3F6 ..... H32
P41.3F9A2 ..... H40
P41.3F11 ..... H33
P41.3F12 ..... H33
P41.3F13 ..... H33
P41.3F14A2 ..... H40
P41.3F17 ..... H33
P41.3F18D1F1 ..... H65
P41.3SD N62
P41.3SDF4 ..... N62
P41.3SDF6 ..... N62
P41.4F2 ..... H33
P41.4F8 ..... N56
P41.5F2 ..... H33
P41.35DF5 ..... N62
P41F1 ..... H32
P42 ..... H33
P42.5F2 ..... I29
P42F1 ..... H33
P42F2 ..... H39, H40
P42F9 ..... H33
P42F10 ..... H33
P42F13A1 ..... H40
P44.45F5 ..... H40
P44.45F10 ..... H64
P44.45F12K H40
P44.45F15K H40
P44.45F18 ..... H33
P44F1 ..... H33
P44F3A2 ..... H40
P45-B C18
P45F4 ..... H33
P45F5 ..... H64
P45F8 ..... K6
P46 ..... H39, H40
P47.25/55.75 ..... N65
P47D1F1 ..... H65
P49.8 ..... H33
P49.9/50.1 ..... N65
P49F2A1 ..... H40
P50 ..... H33
P50-35TC G22
P50-B C18
P50.8F1 ..... H34
P50.8F10 ..... K9
P50.8F11 ..... G24
P50.8F12 ..... H34
P50.8F16 ..... H34
P50.8F20 ..... G23
P50.8F22A1-F H41, H42
P50.8F31 ..... H34
P50.8F34D H65
P50.8F35A1 ..... H41, H42
P50.8F38-B H34
P50.8F40 ..... H41, H42
P50.8F42 ..... H34
P50.8F50 ..... H34
P50.8F56 ..... H34
P50.8F59-B H34
P50.8F60-2STCB G23
P50.8F65K H42
P50.8F65K1 ..... H41
P50.8F67GK H64
P50F1 ..... H33
P50F2 ..... H33
P50F3 ..... H33
P50F3A1 ..... H40
P50F3D3F1 ..... H65
P50F3D3F2 ..... H65
P50F7 ..... H33
P50F10SS O24
P50F11 ..... H33
P50F14 ..... H33
P50F15 ..... H33
P50F16 ..... H39, H40
P50F19 ..... G22
P50F21 ..... H33
P50F22GK H64
P50F26 ..... H33
P50F27A1 ..... H40
P50F31 ..... H34
P50F36 ..... H34
P50F42A1 ..... H40
P50F49 ..... H34
P50F49-3STC G22
P50F53A2 ..... H40
P50F58 ..... H34
P53F2 ..... I29
P54.75D1 ..... H65
P54F2 ..... H34
P55-B C18
P55F1-B C18
P55F4-B C18
P58 ..... H34
P58F1 ..... H34
P58F2A2 ..... H41, H42
P60-B C18
P60A2F16 ..... H41, H42
P60F4 ..... H34
P60F4GKF1 ..... H64
P60F4GKF2 ..... H64
P60F11-D3 ..... H65
P62.5A3F1 ..... H41, H42
P63.5 ..... H34
P63.5F7 ..... H34
P63.5F12 ..... H34
P63.5F22 ..... H34
P63.5F23 ..... I5
P63.5F36 ..... H34
P63F4 ..... K6
P63F6 ..... I18
P63F9 ..... I18
P63F10 ..... H61
P63F15 ..... I18
P63F16 ..... I5
P63F20 ..... H34
P63F20-D3 ..... H65
P63F23 ..... I8
P63F25 ..... I5
P63F26 ..... I18
P63F30K H42
P63F30K1 ..... H41
P63F31 ..... I18
P63F32 ..... I18
P63F40 ..... I6
P63F47 ..... K15
P63SBF1 ..... B24
P65-B C18
P66.5F1 ..... J8, J9
P66.27F1 ..... H34
P66.27F5 ..... H34
P66.27F6 ..... G2
P66.27F9 ..... H34
P66.27F10 ..... K33
P68.25F1 ..... H41, H42
P69.8SF1 ..... H34
P69.85F6-G19 ..... L16
P69F1 ..... H34
P69F2 ..... J30
P69F3 ..... H34
P69F4A1 ..... H41, H42
P69F5A1 ..... H41, H42
P70-B C18
P70F K32
P70F2SS O23
P70F23 ..... K31
P70F29 ..... H41, H42

P75 K31, K32
P75F6 H41, H42
P75F8-G-2 H34
P75F8A2 H41, H42
P75F8A2-F H41, H42
P75F9 K9
P75F18 I33
P75F20A1 H41, H42
P75F22 I33
P75F23 H41, H42
P75F24 I33
P75F27A2 H41, H42
P75F34A1 H41, H42
P75F34A2 H41, H42
P75F35 H34
P75F38K H42
P75F38K2 H41
P75F39G2 I35
P75F41G4 I33
P75F48G4 I33
P75F53 H34
P75F55SR2 L32
P75F56A1 H41, H42
P75F57A2 H41, H42
P75F58-S-75 H35
P75F59G4 I33
P75F63A2 H41, H42
P76.2F1 H41, H42
P76.2F2 H35
P76.2F10 H35
P76.2F14 H35
P76.2F14A3 H41, H42
P76.2F19 I18
P76.2F25 H35
P76.2F27 I18
P76.2F31 I33
P76.2F35 H35
P76.2F38 H35
P76.2F41K H42
P76.2F41K1 H41
P76.2F42K H42
P76.2F42K1 H41
P76.2F43 H41, H42
P76.2F51G4 I33
P76.2F55G4 I33
P76.2F60 H38
P76.2F69A2 H41, H42
P76.2F71 H35
P76.2F72-D L18
P76.2F81G4 I33
P76.7 L2, L3
P76F1K H42
P76F1K1 H41
P78 J14
P78.1F5K H42
P78.1F5K2 H41
P78.11F K32
P78.11F8 H43, H44
P78.11F9 H43, H44
P78.11F10 J19
P78.11F11 H35
P78.11F25 L19
P78.11F29 K31
P78.18F1 C2
P78F1 J14
P78F2 J14
P78F2K H42
P78F2K2 H41
P78F3 J14
P78F3K H42
P78F3K2 H41
P78F5 J14
P78F6 J14
P80 G20
P80-B C18
P80F K32
P80F1 H35
P80F2 G21
P80F3 G20
P80F4 H43, H44
P80F4-P H43, H44
P80F5 H35
P80F6 H35
P80F7 K31
P80F8 K30, K31
P80F10 H35
P80F17 K30, K31
P80F19 K31
P80F21 K31
P80F27 K30, K31
P80F29 K31
P80F30 K31
P80F32 G20
P80F35 H35
P80F37 H35
P80F39 K31
P80F41 K30
P80F45 K30, K31
P80F51A1 K31, K32
P80F53 K36
P80F62 K31
P80F63A2 H43, H44
P80F69 K31
P80F87 K31
P85A2F1 H43, H44
P90F1 J23
P90F5A2 H43, H44
P90F8A2-GK H43, H44
P90F12-2STC G27
P95 I30, I31
P95.25F1 K5
P95F1A2 H43, H44
P95F3 H35
P97.5F1 H43, H44
P100 H57, H58
P100A2-F1 H43, H44
P100F1 H43, H44
P100F2 H43, H44
P100F2A2 H43, H44
P100F3 H43, H44
P100F4 H43, H44
P100F4A2F1 H57, H58
P100F5 H43, H44
P100F7 H35
P100F11 J29
P100F12 H43, H44
P100F13 J26
P100F15 H43, H44
P100F16 J8, J9
P100F16A2-F H43, H44
P100F25 H35
P100F33 H43, H44
P100F41A2 H43, H44
P100F49 J19
P100F50 H43, H44
P100F52 H35
P100F53 H35
P100F54 J19
P100F56 H35
P100F59 H61
P100F75 H43, H44
P100F77 H35
P100F82A1 H43, H44
P100F84 H35
P100F92 H35
P100F93 H43, H44
P100F94K1 H43, H44
P100F95A2 H43, H44
P100F97 I33
P100F99K2 H43, H44
P100F101A2 H45, H46
P100F104 H43, H44
P100F107.04 I32
P100F108K2 H43, H44
P100F109A2 H43, H44
P100F111 H35
P100F112.04 I32
P100F113 K19
P100F114 H35
P100F122 H35
P100F125 H35
P100F126 H63
P100F127G4 I33
P100F128K2 H45, H46
P100F135SS-D3 O24
P100F139 J26
P100F143 H45, H46
P100F148A2-F H45, H46
P100F154 J24
P100F155 J25
P100F161-S H35
P100F166 H35
P100F170 J24
P100F174 I18
P100F175A2 H45, H46
P100F178 I28
P100F189 J23
P100F190 J25
P100F196 H35
P100F202 L22
P100F204 J24
P100F205 J25
P100F217 L27
P100F218 J23
P100F223 H36
P100F225G4 I30, I31
P100F226K2 H45, H46
P100F233A2 H45, H46
P100F237A3 H45, H46
P100F240 L22
P100F241K2 H45, H46
P100F243 L18
P100F246 L22
P100F247 L22
P100F248 H36
P100F250 H36
P100F251K2 H45, H46
P100F254 K16
P100F262-G2 L32
P100F264A2 H45, H46
P100F269G4 I30, I31
P100F270GK I28
P100F277A2 H45, H46
P100F279 H36
P100F281A1 H45, H46
P100F285 H61
P100F297 L27
P100F298 L22
P100F300K2-SR2 L28
P100F310 J24
P100F312 J24
P100F314 G27
P100F321-SR1 L25
P100F322 L24
P100F325 L24
P100F331A2 H45, H46
P100F335 J24
P100F337 L22
P100F339 L22
P100F341 K16
P100F348 L22
P100F355 H36
P100F356A2-F H45, H46
P100F360 H36
P100F361 I6
P100F371G4 I33
P100F3162 K6
P101.6 J8
P101.6F1 H45, H46
P101.6F2 L1, L3
P101.6F2(e L2
P101.6F2-HP L2
P101.6F2A2F1 H45, H46
P101.6F2K241 L3
P101.6F4 H36
P101.6F9 H45, H46
P101.6F10 H61
P0101.6F12 L1
P0101.6F15 L1
P101.6F17K2 H45, H46
P101.6F17K2F1 H45, H46
P101.6F18 H36
P101.6F18A1 H45, H46
P101.6F18A2 H45, H46
P101.6F19 H36
P101.6F20 J3
P101.6F21 H45, H46
P101.6F24 H36
P101.6F25 H45, H46
P101.6F28 J19
P101.6F30A2 H45, H46
P101.6F35 H45, H46
P101.6F36 H45, H46
P101.6F39 H45, H46
P101.6F39K1F1 H45, H46
P101.6F40A2 H45, H46
P101.6F41K1 H45, H46
P101.6F43A2 H45, H46
P101.6F46 H36
P101.6F51 H36
P101.6F54K1 H47, H48
P101.6F56K2 H47, H48
P101.6F57K3 H47, H48
P101.6F62K H48
P101.6F62K1 H47
P101.6F64 L2
P101.6F69 H36
P101.6F69K3 H47, H48
P101.6F71 H36
P101.6F73 H36
P101.6F76 H48
P101.6F80-S H36
P101.6F80A2 H47, H48
P101.6F84A2 H47, H48
P101.6F88 H47, H48
P101.6F91A1 H47, H48
P101.6F92 I32
P101.6F95K2 H47, H48
P101.6F97K H48
P101.6F97K1 H47
P101.6F98K2 H47, H48
P101.6F101K1 H47, H48
P101.6F106 H36
P101.6F115A2 H47, H48
P101.6F117A2 H47, H48
P101.6F121A1 H47, H48
P101.6F123K1 H47, H48
P101.6F128K3 H47, H48
P101.6F131A2 H47, H48
P101.6F135A2 H47, H48
P101.6F136K2 H47, H48
P101.6F138 L12
P101.6F147K1 H47, H48
P101.6F151SR2 K15
P101.6F157 H36
P101.6F160-F H36
P101.6F165A2 H47, H48
P101.6F166 H36
P101.6F167 H36
P101.6F178 H61
P101.6F184 H36
P101.6F186 K34
P101.6F189K3 K33
P101.6F1592STC G26
P103.2F3 H36
P103.2F6 H36
P110F5 H63
P110F21 H63
P114.3F7A2 H47, H48
P117 H47, H48
P120 H47, H48
P120.9F3 H36
P120A2F4 H47, H48
P120F14A2 H47, H48
P120F15A1 H47, H48
P120F17A2 H47, H48

P120F18-TP L27
P125A2F1 ..... H47, H48
P125F J11
P125F1 ..... H36
P125F2 ..... H47, H48
P125F2A2-F H49, H50
P125F2H H36
P125F2K2-P H49, H50
P125F3 ..... J10
P125F4 ..... J10
P125F9A2 ..... H47, H48
P125F25K2-P H49, H50
P125F28A2 ..... H49, H50
P125F30A2-F H49, H50
P125F38K2 ..... H49, H50
P125F41 ..... I33
P125F43A2 ..... H60
P125F47G4 ..... I33
P125F51 ..... K16
P125F54A2-F H49, H50
P125F56 ..... K16
P125F61G4 ..... I30, I31
P125F62G4 ..... I30, I31
P125F69 ..... H61
P125F70A2-P H49, H50
P125F71 ..... H61
P125F82K2 ..... H49, H50
P125F86 ..... L22
P125F87A2 ..... J20
P125F88A2 ..... H49, H50
P127F1 ..... H36
P127F4 ..... K19
P127F9 ..... H36
P127F10 ..... H37
P127F12A2 ..... J21
P127F13 ..... H37
P129A1F1P J20
P130F6 ..... K17
P130K2F2 ..... H49, H50
P135F6 ..... H37
P139.7F1A1 ..... H49, H50
P140F3 ..... C4
P140F50A2 ..... J20
P140F51A2 ..... J21
P150/90 ..... J26
P150F2 ..... H49, H50
P150F4 ..... H49, H50
P150F4K2 ..... H60
P150F6 ..... H49, H50
P150F10 ..... H37
P150F11A2 ..... H49, H50
P150F13A2 ..... H49, H50
P150F14A2 ..... H49, H50
P150F15 ..... H37
P150F16A2 ..... H49, H50
P150F17A J2
P150F17C J3
P150F18 ..... H49, H50
P150F21A2 ..... H49, H50
P150F26A2 ..... H49, H50
P150F31A2 ..... H49, H50
P150F32A2 ..... H49, H50
P150F40 ..... H57, H58
P150F41 ..... H57, H58
P150F43 ..... H37
P150F44 ..... H37
P150F47 ..... I30, I31
P150F51 ..... H37
P150F53A2 ..... H49, H50
P150F76 ..... H37
P150F77 ..... G21
P150F78A1 ..... H49, H50
P150F79 ..... H37
P150F85 ..... H49, H50
P150F86 ..... H61
P150F93 ..... H37
P150F97G4 ..... I33
P150F98 ..... H37
P150F100 ..... H38
P150F105A2-F H49, H50
P150F105K2 ..... H49, H50
P150F108K2-F H60
P150F110A2 ..... H49, H50
P150F112A2 ..... H49, H50
P150F121A2 ..... H51
P150F121A21S0.00 ..... H52
P150F134SK2 ..... H60
P150F137A2 ..... H51, H52
P150F142G4 ..... I30, I31
P150F144A2 ..... H51, H52
P150F145A1 ..... J22
P150F147 ..... J12
P152F H51, H52
P0152F1 ..... L1, L3
P152F2 ..... J3
P0152F3 ..... L1, L3
P152F3(New L2
P152F4 ..... H51, H52
P0152F4 ..... L1, L3
P152F5 ..... H37, L1, L3
P152F5(b L2
P0152F6-HP L2
P0152F7 ..... L1
P152F10 ..... H37
P152F11 ..... H51, H52
P152F13 ..... H59
P152F14 ..... L1
P152F16 ..... H51, H52
P152F17 ..... L1, L3
P0152F17 ..... L1
P152F18 ..... J19
P152F19 ..... H51, H52
P152F20 ..... H51, H52
P0152F22 ..... L1
P0152F23 ..... L1
P152F24 ..... J19
P0152F24 ..... L1
P0152F25 ..... L1, L3
P0152F26 ..... L1
P0152F27 ..... L1
P152F28 ..... H37
P152F29 ..... L1, L3
P152F29-HP L2
P152F31 ..... L2
P152F32K2 ..... H51, H52
P152F33 ..... H51, H52
P152F35 ..... H37
P152F37 ..... H37
P152F39 ..... H37
P152F41 ..... I30, I31
P152F41A2 ..... H51, H52
P152F42 ..... H37
P152F42K2F1 ..... H51, H52
P152F43 ..... H51, H52
P152F45 ..... J2
P152F45A J2
P152F45B J2
P152F45C J2
P152F45D J3
P152F45E J3
P152F45F J3
P152F46 ..... J3
P152F47 ..... J2
P152F48 ..... J3
P152F49 ..... H37, H61
P152F50 ..... H51, H52
P152F51 ..... J1
P152F52-BRSS H37
P152F54 ..... H51, H52
P152F56 ..... H51, H52
P152F67 ..... H37
P152F68K2 ..... L4
P152F77 ..... L13
P152F77-A2 ..... L15
P152F77-AS2 ..... L9, L10
P152F77-AS2F3 ..... L15
P152F78 ..... L12
P152F78-AS2 ..... L14
P152F78K2 ..... L5, L6
P152F78K2F1 ..... H51, H52, L5, L6
P152F83K2 ..... L5, L6
P152F87-AS2 ..... L9, L10
P152F87K2 ..... L5, L6
P152F88 ..... L12
P152F88-F3 ..... L14
P152F93K2 ..... L5, L6
P152F97K2 ..... L4
P152F100 ..... H37
P152F101K2 ..... L4
P152F103 ..... L5, L6
P152F107A2 ..... H51, H52
P152F111K2 ..... H51, H52
P152F114 ..... L12
P152F117K2 ..... H51, H52
P152F119 ..... I32
P152F120 ..... I32
P152F123 ..... J15
P152F126 ..... I32
P152F128K2 ..... H51, H52
P152F136 ..... H37
P152F137A2 ..... H51, H52
P152F144K2 ..... H51, H52
P152F146-AS2 ..... L10
P152F148-AS2 ..... L15
P152F151 ..... L13
P152F151-A1 ..... L15
P152F151-A2 ..... L15
P152F153-AS2F1 ..... L9, L10
P152F154-AS2F1 ..... L9, L10
P152F156 ..... L12
P152F168A2 ..... H51, H52
P152F169SS-G L16
P152F169SS-G4 ..... L16
P152F172 ..... I34
P152F173 ..... H37
P152F176K2 ..... H51, H52
P152F180 ..... H51, H52
P152F193K2 ..... I34
P152F194 ..... J2
P152F201K4 ..... I34
P152F206K2 ..... H51, H52
P152F207SR2 ..... K15
P152F208K2 ..... H51
P152F210 ..... H37
P152F213K2 ..... H51, H52
P152F221 ..... J1
P152F222 ..... J1
P152F226 ..... J2
P152F227K2 ..... H51, H52
P152F230A2 ..... J21
P152F232 ..... J1
P152F236G4 ..... I30, I31
P152F247K2 ..... H51, H52
P152F248 ..... J19
P152F251 ..... K34
P152F252A2 ..... H53, H54
P153 ..... C4
P153F1 ..... C4
P153F2 ..... C4
P153F3K2 ..... H53, H54
P154F1 ..... H37
P155F1 ..... H37
P160 ..... H57, H58
P160F J11
P160F1 ..... H53, H54
P160F2 ..... H61
P160F3 ..... H53, H54
P160F5 ..... H53, H54
P160F8 ..... H53, H54
P160F12 ..... J10
P160F15 ..... H37
P160F16 ..... H37, L2
P160F18 ..... H53, H54
P160F26 ..... H53, H54
P160F27 ..... H38, L2
P160F37A2 ..... H53, H54
P160F44 ..... H61
P160F48 ..... H38
P160F53K2 ..... H53
P160F61G4 ..... I35
P160F64K2 ..... H53, H54
P160F73 ..... H38
P160F76K2 ..... J15
P160F79A2 ..... H53, H54
P160F82K2 ..... J15
P160F85 ..... H38
P160F99K2 ..... J15
P173F1A2 ..... J20
P173F2A2 ..... J20
P175F1 ..... H62
P175F5A2 ..... H53, H54
P177.8F6 ..... H38
P180F25 ..... H53, H54
P185 ..... H53, H54
P185F3A2 ..... J21
P192F2A1 ..... J22
P200F6 ..... H53, H54
P200F7 ..... H53, H54
P200F8 ..... H53, H54
P200F10 ..... H38
P200F13 ..... H53, H54
P200F15 ..... H38, H53, H54
P200F22 ..... H53, H54
P200F23 ..... H53, H54
P200F26A2 ..... H53, H54
P200F28 ..... H57, H58
P200F28K2F1 ..... H53, H54
P200F29 ..... J2
P200F29A J2
P200F30 ..... H53, H54
P200F31 ..... H57, H58
P200F35 ..... J2
P200F58 ..... H38
P200F60 ..... H62
P200F63 ..... I32
P200F64 ..... I32
P200F65 ..... I32
P200F70 ..... I35
P200F82A2-F H53, H54
P200F86 ..... H38
P200F95G4 ..... I35
P200F118A2 ..... H53, H54
P200F121A2 ..... H53, H54
P200F122A2-F H53, H54
P200F123A2-F H53, H54
P200F124A2-F H53, H54
P200F126A2-F H53, H54
P200F128G4 ..... I30, I31
P200F130G4 ..... I30, I31
P200F131A2SR L25
P200F133A2 ..... H53, H54
P200F139A2F H55, H56
P200F142A2F H55, H56
P200F147A2F H55, H56
P200F153G4 ..... I35
P200F178A2 ..... H57, H58
P200F188A2 ..... H57, H58
P203.2F6 ..... H55, H56
P203.2F8 ..... L5, L6
P203.2F9 ..... L9, L10
P203.2F10 ..... H55, H56
P203.2F16K2 ..... H55, H56
P203.2F18 ..... H38
P203.2F20 ..... H38
P210 ..... J29
P220F4A3 ..... H55, H56
P228.6F9 ..... H38
P228.6F28K2 ..... H55, H56
P240F5 ..... K14
P250F6 ..... I30, I31
P250F25 ..... H55, H56
P250F36 ..... H38
P250F38K2 ..... H55, H56
P250F39 ..... H38
P250F42 ..... I32
P250F43 ..... I32

P250F44 J15
P250F45 J15
P250F46 J15
P250F47 J15
P250F61 J17
P250F66 I30, I31
P250F68A2 H55, H56
P250F71SS I30, I31
P250F74 J16
P250F79 H38
P250F85 H38
P250F87G4 I30, I31
P250F100A2 L28
P250F103K2 L29
P250F106A2 H55, H56
P250F108A2 H59
P250F109A2 H59
P250F110G4 I30, I31
P250F114K2 L29
P250F115A2 L25
P250F119A2 H59
P250F120K2 L29
P250F121A2 H59
P250F122K2 L29
P250F129K2 H55, H56
P250F132 K11
P250F137A2-SR L26
P250F140A2SR L26
P250F142A2 H55, H56
P250F155A2FZ H59
P250F157A3 H55, H56
P250F159A2SR L26
P250F163 I30, I31
P250F168 K1, K4
P250F170A2 H55, H56
P250F171A2 L28
P250F172K2 L29
P250F173A2 H57, H58
P250F176A2 H55, H56
P250F191A2 H55, H56
P250F193A2 H55, H56
P250F197A2 L28
P250F200A2 H55, H56
P250F206K2 L29
P300 H57, H58
P300F1 I30, I31
P300F5 K5
P300F7 K10
P300F9 I32
P300F23 H61
P300F38A2F K12
P300F41A2 H55, H56
P300F48 K12
P315 L30
P315F11 J16
P315F12 I34
P315F23 J18
P315F30SR1 J18
P315F36 J18
P315F39 J18
P350 H57, H58
P350F2G4 I30, I31
P400F1 H57, H58
P400F14 J18
P400F15 J18
P450F1 M28
P450F2 M28
P450F4 M28
P450F5 M29
P450F6 M29
P450F9SA3 K11
P450F13 M29
P460F1 M29
P460F2 M29
P460F3 M29
P460F5 M29
P500 K1
P500F1 K1
P500F2 K1
P500F4 I34, J17
P500F5 J17
P500F8 J18
P500F9 J17
P500F10 J17
P500F18 K1
P500F2300 K1
P503F7 C18
P503F24D3 H65
P600F1 K3
P600F3 K10
P600F9 K14
P609.6F1 J27
P609.6F2 J28
P635F31-D3 H65
P650 K2
P750 K2
P1000 K3, K4
P6626F3-3STC G24
P16053K2 H54
PD60 G41
PI00F268 H36
PI00F328 J25
PI00H H35
PR100F3 J7
PR100F4 J7
PR100F5 J7
PR100F6 J7
PR100F8 J7
PR100F9 J7
PR101.6F1 J8, J9
PR150F J11
PR150F3 J10
PR150F4 J12
PR152F2 J2
PZ20-B C18

R

R2F1 F5
R01644F1 C2
R01644F2 C2
R3112 C1
R3112F1 C1
R06042F1 C4
R06205MF3 J3
RF6205MF6A2 H51, H52
RF6205MF7 H51, H52
RF6205MF13 J4
RF10100K2 H45, H46
RF10125R-A2 H49, H50
RF10150-S H37
RF10150R H50
RF10150RA2 H49, H50
RF10150RA2-F H49
RF10150RF1G4 I30, I31
RF10150RFl I30, I31
RF10250RA2 H55, H56
RF12200A2-F-200 H53, H54
RF17200MF1G4 I30, I31
RF17200MF2G4 I30, I31
RF17200S-G4 I35
RS40F1 D25

S

S32F1 N26
S32K1 N25
S32K1F1 N25
S32K1F2 N27
S32K1F3 N25
S32SD N28
S32SK1 N24
S32SK1F1 N24
S32VK1 N25
S42-D1F1 N33
S42-D2 N33
S42A1F2 N25
S42F2 N21
S42F2A1 N25
S42F2K1F1 N24
S42K1 N25
S42SK1 N24
S42SK1F1 N24
S45B-F1 N28
S45F1 N28
S45H N21
S45HF1 N31
S45HF3 N28
S45HF3-G N45
S45HSDF1 N31
S45HSDF1-G N45
S45HSDF3 N29
S45K1 N25
S45K1F1 N27
S45K1F2 N27
S45SD N28
S45SDF1 N29
S45SDF1-G N45
S45SDF2 N28
S45SDF3 N29
S45SK1 N24
S45V N29
S45W N45
S45W-F4 N28
S51HF1K1 N25
S51K1 N25
S51SDF1 N28
S52F1 N26
S52F2 N26
S52F3 N29
S52F4 N28
S52F6 N27
S52F7 N26
S52F8 N28
S52F9 N28
S52F10 N21
S52F11SD N29
S52F12 N26
S52F12SD N28
S52F13K1 N26
S52K1 N25
S52K1F1 N25
S52K1F3 N27
S52L N21
S52L-G N45
S52LF1K1 N24
S52LF1SD N28
S52LF2SD N28
S52LK1 N24
S52LSD N28
S52LV N21
S52LVSD N28
S52LVSDF1 N28
S52SD N28
S52SDF1 N28
S52SDF2 N28
S52SK1 N24
S55F2 N28
S55F2-G N45
S55F3 N28
S55F4 N28
S55F5 N27
S55F6 N28
S55F6-G N45
S55F7 N28
S55F9SD N30
S55F10SD N31
S55F12SD N29
S55H(DSD N31
S55H(DSDF3 N31
S55H(T)K1 N25
S55HF N32
S55HF1 N32
S55HF2 N32
S55HF5 N25
S55HK1 N25
S55HSD N31
S55HSDF1 N31
S55HSDF2 N30
S55HSDF3 N29
S55K1 N25
S55K1F1 N25
S55R N21
S55RH N21
S55RHF1 N21
S55RHF2K1 N27
S55RHF3K1 N27
S55RHK1 N27
S55RHSDF N31
S55RHSDF1 N31
S55RHSK1 N24
S55RK1 N27
S55RK1F1 N25
S55RSD N31
S55RSDF1 N28
S55SDF1 N29
S55SDF2 N28
S55SDF2-G N45
S55SDF3 N31
S55SDF4 N28
S55SDF6 N28
S55SK1 N24
S55V N29
S55VK1F2 N26
S62-D3F1 N33
S62-D4 N33
S62A2K1 N25
S62F2K1 N25
S62F3 N23
S62F4 N59
S62F5 N21
S62F5A2K1 N25
S62F6 N59
S62F8 N21
S62F10 N21
S62F12K1 N25
S62K1 N25
S62K1F1 N27
S62K1F2 N27
S62K2F1 N27
S62R N21
S62R-C6E N33
S62SD N28
S62SK1 N24
S77A1F2 N32
S77A1F3 N32
S77F1A1 N32
S77F1K1 N38
S77F2A1 N32
S77F2K1 N38
S77K1 N25
S77K1F1 N27
S77SK1 N24
S88F2K1 N25
S88F3K1 N25
S88K1 N25
S88K2F1 N27
S88SK1 N24
S102.5 J37
S102.5A2F1 J38
S102B J37, J38
S102BF3K2 J39
S102BF6K2 L8
S102BF7 L18
S110 J37, J38
S110F1 J37, J38
S110F3 J38
S111 J37, J38
S111F1 J37, J38
S111F2K2 J39
S111F4 L18
S131 J37, J38
S150 J37, J38, J39
S150F1 J37
S188 J37, J38, J39
S188A22F1 J39
S188F6 J38
S188F8 J40

S856 ... J37, J38, J39
S856F3 ... J38
S856F5 ... J38
S856F8K3 ... J39
S857 ... J37, J40
S859 ... J37, J40
S859F1K4 ... I36
S859F1K4K44 ... I36
S864 ... J37, J40
S864F3K443 ... I36
S984F3K443 ... I36
S-48-P24/C24 ... F1
SA0F1 ... E25
SA2F1 ... E11, E17
SB1254F1 ... C2
SC3 ... C5
SC4 ... C5
SC5 ... C5
SC6 ... C6
SC8 ... C6
SC8F1 ... C7
SC10 ... C7
SDB400 ... J15
SDB500(540 ... J15
SDB630(600 ... J15
SH1245 ... C3
SJ184F1 ... J35
SJ200F5 ... J35
SJ240F1 ... J32
SJ250F3 ... J31
SJ250F4 ... J31
SJ250F6 ... J32
SJ250F7 ... J34
SJ250F9 ... J33
SJ250F11 ... J33
SJ266.66 ... J31
SJ280 ... J31
SJ300F2 ... J33
SJ300F3 ... J31
SJ300F4 ... J31
SJ300F8 ... J34
SJ300F9 ... J32
SJ300F13 ... J33
SJ300F14 ... J35
SJ350 ... J35
SJ400F1120 ... J30
SJ400F3120 ... J30
SJ405S60 ... J30
SJ405SF160 ... J30
SJ406S50 ... J29
SJ500F2 ... J36
SJ500F4 ... J36
SJ685.8F1 ... J36
SJ40040 ... J30
SJ40060 ... J30
SJ400100 ... J30
SK0F8 ... D14
SK1F3 ... D14
SM76.25D ... L17
SM78.75F1 ... L19
SM101.6F1-AS2 ... L10
SM101.6F4 ... L13
SM101.6F4A2 ... L11
SM101.6F5-A1 ... L15
SM101.6F7 ... L13
SM101.6F7-AS2 ... L15
SM101.6F10 ... L13
SM101.6F10-A1 ... L15
SM101.6F10-AS2 ... L9, L10
SM101.6F19K1 ... L7
SM102 ... L13
SM150F1K2 ... L5, L6
SM152F2 ... L12
SM152F5 ... L12
SM152F6-AS2 ... L9, L10
SM152F7 ... L12
SM152F11 ... L18
SM152F14-AS2 ... L9, L10
SM152F16 ... L13
SM152F16-AS2 ... L9, L10
SM152F25K2 ... L5, L6
SM152F29K2 ... L5, L6
SM152F31-AS2 ... L9, L10
SM152F33K2 ... L5, L6
SM152F43-AS2 ... L9, L10
SM152F46K2 ... L5, L6
SM152F54 ... L13
SM152F54-A2 ... L15
SM152F56K2 ... L8
SM152F57K2 ... L5, L6
SM152F59 ... L19
SM152F63A4 ... L7
SM160F4 ... L17
SM200F1-PUSHER ... L17
SM203.2 ... L9
SM203.2F1K2 ... L5, L6
SM203.2F3K2 ... L4
SM203.2F4K2 ... L4
SM203.2F5K2 ... L4
SM203.2F7-A1F1 ... L15
SM203.2F7-AS2 ... L9, L10
SM203.2F8 ... L13
SM203.2F8-AS2 ... L15
SM203.2F8-AS2F3 ... L15
SM203.2F8-AS2F5 ... L15
SM203.2F11 ... L12
SM203.2F15K2 ... L5, L6
SM203.2F18-AS2 ... L9, L10
SM228.6F3 ... L13
SM228.6F3K2 ... L11
SM228.6F4 ... L13
SM228.6F4-AS2 ... L15
SM228.6F6 ... L13
SM228.6F8 ... L13
SM228.6F8-AS2 ... L15
SM228.6F11 ... L20
SM228.6F14 ... L20
SM228.6F16K2 ... L5, L6
SM304.8F1 ... L20
SM304.8F3 ... L20
SM304.8F4 ... L20
SM304.8F5 ... L20
SM304.8F11 ... L20
SM304.8F13 ... L20
SM304.8F18K2 ... L5, L6
SS40H(P ... C2
SS40HF2 ... C2
SS40SL ... K35
SS40SLF2 ... K35
SS124 ... C3
SS568H ... C1
SS568HF2 ... C1
SS568HF3 ... C1
SS568HF4 ... C1
SS588 ... C1
SS588F1 ... C1
SS588F2 ... C1
SS588F4 ... C1
SS588F7 ... C1
SS635H ... C3
SS635HF2 ... C3
SS635HF3 ... C3
SS635HF5 ... C3
SS635HF6 ... C3
SS1245 ... C3
SS1245F1 ... C3
SS1245F2 ... C3
SS1245F3 ... C3
SS1245F4 ... C3
SS2065 ... C1

T

T0S50 ... I17
T0S50F1 ... I17
T0S80 ... I17
T3F ... C12
TPJP80F1 ... K30
TPJP80F3 ... K30
TPJP80F4 ... K30
TPJP80F12 ... K30

W

W0102 ... K28
W152 ... J27
WD102 ... K27, K28, K29
WD104 ... K27, K28, K29
WD110 ... K27, K28, K29
WD112 ... K27, K28, K29
WD113 ... K27, K28, K29
WD116 ... K27, K28, K29
WD118 ... K27, K28, K29
WD122 ... K27
WD480 ... K27, K28, K29
WDH122F3 ... K29
WH78 ... K23, K24
WH78F4 ... K22
WH78F6 ... K26
WH78F10 ... K26
WH82 ... K22, K23, K24
WH82F3K2 ... K26
WH111 ... K23
WH111F1 ... K22
WH124F1 ... K22
WH124H ... K23
WH150F2 ... K26
WR78 ... K23, K24
WR78F5 ... K22
WR78WH78 ... K23, K25
WR82 ... K22, K23, K24
WR82WH82 ... K25
WR111 ... K23
WR124H ... K23
WR124HW ... K25
WR124W ... K25
WR132WH132 ... K25

X

X603 ... C1
X604 ... C2
X704 ... C2
XS3011F1 ... C1

Z

Z40 ... H25
Z100 ... H25
Z160 ... H25
Z300 ... H25
ZC21 ... H28
ZC40 ... H28
ZC60 ... H28
ZC150 ... H28
ZC300 ... H28
ZE40 ... H27
ZE100 ... H27
ZE160 ... H27
ZE300 ... H27
ZGS38 ... N5
ZGS38-C6E ... N10
ZGS38-C6EF1 ... N10
ZGS38-C6EF2 ... N10
ZGS38-C6EF3 ... N10
ZGS38-C6EF4 ... N10
ZGS38-CPEF1 ... N10
ZGS38-CPEF3 ... N10
ZGS38-CPEF6 ... N10
ZGS38F1 ... N9
ZGS38F2 ... N6
ZGS38F3 ... N9
ZGS38F5 ... N7
ZGS38F6K1 ... N6
ZGS38F8 ... N7
ZGS38F10K1 ... N6
ZGS38F13K1F1 ... N6
ZGS38F14SD ... N7
ZGS38F18 ... N6
ZGS38F32SD ... N9
ZGS38F35 ... N7
ZGS38F42 ... N5
ZGS38F42K1 ... N6
ZGS38F43K1 ... N6
ZGS38F44 ... N7
ZGS38F46 ... N6
ZGS38F47 ... N8
ZGS38HF7 ... N5
ZGS38HF12K1F1 ... N6
ZGS38K1 ... N9
ZGS38SDF1 ... N9
ZGS38SDF4 ... N7
ZGS38SDF5 ... N9
ZGS38SDF6 ... N9

ringball corporation



RBL

Vancouver
7880 Fraser Park Drive
Burnaby, BC
V5J 5L8
T: (604) 294-3461
F: (604) 294-4680
E: vancouver@ringball.com

Edmonton
7606 McIntyre Road, N.W.
Edmonton, AB
T6E 6Z1
T: (780) 465-3311
F: (780) 490-4664
E: edmonton@ringball.com

Winnipeg
190 Omands Creek Blvd.
Winnipeg, MB
R2R 1V7
T: (204) 694-1455
F: (204) 633-7230
E: winnipeg@ringball.com

Toronto - H.O.
2160 Meadowpine Blvd.
Mississauga, ON
L5N 6H6
T: (905) 826-1100
F: (905) 826-9691
E: toronto@ringball.com

Montreal
2205 rue de l'Aviation
Dorval, QC
H9P 2X6
T: (514) 685-6006
F: (514) 685-6007
E: montreal@ringball.com

VISIT OUR WEBSITE: www.ringball.com